McKinney Area Engineering and Maintenance Facility

VICINITY MAP

NORTH

BUILDING SUMMARY:

OFFICE:	8,375 SQFT.
CORE:	2,167 SQFT.
LAB / SHOP:	6,695 SQFT.
TRUCK WASH / EQUIP.ROOM:	1,891 SQFT.
WALLS, CHASES, ETC:	1,763 SQFT.
TOTAL BUILDING:	**20,892 SQFT.**
TOTAL STAFF: 110 Full Time Employeess	
VEHICLE PULL-THRU SHED:	5,340 SQFT.

BUILDING CODES:

INTERNATIONAL BUILDING CODE	IBC - 2018
AMERICANS W/ DISABILITIES ACT	ADAAG - 2010
TEXAS ACCESSIBILITY STANDARDS	TAS - 2012
INTERNATIONAL ENERGY CODE	IECC - 2018
INTERNATIONAL MECHANICAL CODE	IMC - 2018
	ASHRAE 62.1 - 2016
INTERNATIONAL PLUMBING CODE	IPC - 2018
NATIONAL ELECTRIC CODE	NEC - 2020
NATIONAL FIRE CODE	NFPA 1 - 2018
NATIONAL LIFE SAFETY CODE	NFPA 101 - 2018
TxDOT STANDARD SPECS FOR ...	STREETS - 2014

TDLR REGISTRATION:

EABPRJ # TABS2021008806

SCOPE OF WORK:

THIS PROJECT INCLUDES SITE DEVELOPMENT AND A NEW FACILITY FOR THE MCKINNEY AREA ENGINEER AND MAINTENANCE OFFICE. THE NEW BUILDING WILL BE A COMBINATION OF OFFICE SPACES, LABS AND SHOPS.

Texas Department of Transportation

Support Services Division / Facilities Planning & Management

150 E. Riverside Drive
Austin, Texas 78701-2483
(512) 416-2257

Project Manager:
Sharon Warbrouck
(817) 889-7973
Sharon.Warbrouck@txdot.gov

04/21/2021

CIVIL:

Vincent Mazidi, P.E
LINA T. RAMEY & ASSOCIATES, INC.
3320 Belt Line Rd
Farmers Branch, TX 75234
Firm Registration No. F-782

LANDSCAPE:

Chad St.John
JACOBS ENGINEERING GROUP, INC.
1999 Bryan St, Suite 1200
Dallas, TX 75201
Firm Registration No. 2966

ARCHITECTURE:

Steven Tremmel, R.A.
JACOBS ENGINEERING GROUP, INC.
1999 Bryan St, Suite 1200
Dallas, TX 75201
Firm Registration No. 2966

STRUCTURE:

Gabriel Serna, P.E.
JACOBS ENGINEERING GROUP, INC.
1999 Bryan St, Suite 1200
Dallas, TX 75201
Firm Registration No. 2966

ELECTRICAL:

John Haley, P.E.
DFW CONSULTING GROUP, INC.
1616 Corporate Court, Suite 100
Irving, TX 75038
Firm Registration No. 720

HVAC & PLUMBING:

Ken Meline, P.E.
DFW CONSULTING GROUP, INC.
1616 Corporate Court, Suite 100
Irving, TX 75038
Firm Registration No. 720

PROJECT:

SITE # 189799
BUILDING # 188196 & 188197

2205 TX-5, McKinney, TX 75069

DALLAS DISTRICT (18)
PROJECT NUMBER: 18-470420012

INDEX OF DRAWINGS

GENERAL	
G0.0	COVER SHEET
G0.1	ABBREVIATIONS & SYMBOLS
G1.1	ACCESSIBILITY DETAILS
G1.2	ACCESSIBILITY DETAILS (CONT.)
G3.1	3D VIEWS
5	
CIVIL	
C1.1	DEMOLITION PLAN
C2.1	SITE PAVING PLAN
C2.2	SITE PAVING PLAN
C3.1	SITE GRADING
C4.1	DRAINAGE CALCULATIONS
C4.2	DRAINAGE AREA MAP
C4.3	STORM SEWER
C4.4	STORM SEWER PROFILES
C4.5	STORM SEWER PROFILES
C4.6	DETENTION POND
C5.1	EROSION CONTROL PLAN
C6.1	WATER & WASTEWATER PLAN
C6.2	WASTEWATER PROFILES
C7.1	CIVIL DETAILS
C7.2	CIVIL DETAILS
C7.3	CIVIL DETAILS
C7.4	CIVIL DETAILS
C7.5	CIVIL DETAILS
18	
LANDSCAPE	
L1.0	PLANTING PLAN
L2.0	IRRIGATION PLAN
L2.1	CISTERN DETAILS
L2.2	IRRIGATION DETAILS
L3.0	ENLARGEMENT PLANTING PLAN
L4.0	SITE FURNITURE DETAILS
L4.1	LANDSCAPE DETAILS
L4.2	LANDSCAPE DETAILS
8	
STRUCTURAL	
S0.0	STRUCTURAL NOTES
S0.1	STRUCTURAL NOTES
S0.2	STRUCTURAL NOTES
S0.3	STRUCTURAL NOTES
S0.4	PERSPECTIVE VIEWS
S1.1	FOUNDATION PLAN OVERALL
S1.2	FOUNDATION PLAN AREA A
S1.3	FOUNDATION PLAN AREA B
S1.4	FOUNDATION PLAN AREAS C AND D
S1.5	TYPICAL FOUNDATION AND CONCRETE DETAILS
S1.6	FOUNDATION SECTIONS AND DETAILS
S1.7	FOUNDATION SECTIONS AND DETAILS
S1.8	FOUNDATION SECTIONS AND DETAILS
S2.1	LOW ROOF FRAMING PLAN OVERALL
S2.2	LOW ROOF FRAMING PLAN AREA A
S2.3	LOW ROOF FRAMING PLAN AREA B
S2.4	ROOF FRAMING PLAN OVERALL
S2.5	ROOF FRAMING PLAN AREA A
S2.6	ROOF FRAMING PLAN AREA B
S2.10	TYPICAL STEEL SECTIONS AND DETAILS
S2.11	STEEL SECTIONS AND DETAILS
S4.1	SAFE ROOM PLANS AND DETAILS
S4.2	EQUIPMENT YARD PLAN AND DETAILS
S4.10	TYPICAL MASONRY SECTIONS AND DETAILS
S5.1	ELEVATIONS
S5.2	ELEVATIONS
26	
ARCHITECTURE	
A0.1	LIFE SAFETY PLAN
A1.1	ARCH SITE PLAN
A1.2	SITE DETAILS
A2.1	FLOOR PLAN OVERALL
A2.2	FLOOR PLAN AREA A
A2.3	FLOOR PLAN AREA B
A2.4	FLOOR PLAN AREA C
A3.1	ROOF PLAN
A4.1	REFLECTED CEILING PLAN OVERALL
A4.2	REFLECTED CEILING PLAN AREA A
A4.3	REFLECTED CEILING PLAN AREA B
A5.1	BUILDING ELEVATIONS
A5.2	BUILDING ELEVATIONS (CONT.)
A5.3	BUILDING ELEVATIONS (CONT.)
A6.1	ENLARGED PLANS, RCPS, & ELEVATIONS
A6.2	ENLARGED PLANS, RCPS & ELEVATIONS
A6.3	ENLARGED PLANS, RCPS & ELEVATIONS
A6.4	ENLARGED PLANS, RCPS & ELEVATIONS
A6.5	ENLARGED PLANS, RCPS & ELEVATIONS
A6.6	MILLWORK SECTIONS & DETAILS
A6.7	MILLWORK SECTIONS & DETAILS
A6.8	MILLWORK SECTIONS & DETAILS
A7.1	BUILDING SECTIONS
A7.2	WALL SECTIONS
A7.3	WALL SECTIONS (CONT.)
A7.4	WALL SECTIONS (CONT.)
A7.5	SECTION DETAILS
A7.6	SECTION DETAILS (CONT.)
A7.7	PLAN DETAILS
A8.1	EXTERIOR ASSEMBLIES
A8.2	PARTITION TYPES
A8.3	DOOR TYPES & SCHEDULE
A9.1	FINISH LEGEND & DETAILS
A9.2	FINISH PLAN AREA A
A9.3	FINISH PLAN AREA B
A9.4	FURNITURE & EQUIPMENT PLAN AREA A
A9.5	FURNITURE & EQUIPMENT PLAN AREA B
37	
PLUMBING	
P0.1	PLUMBING LEGENDS & ABBREVIATION
P2.1	UNDERFLOOR PLUMBING PLAN OVERALL
P2.2	UNDERFLOOR PLUMBING PLAN AREA A
P2.3	UNDERFLOOR PLUMBING PLAN AREA B
P2.4	PLUMBING PLAN OVERALL
P2.5	PLUMBING PLAN AREA A
P2.6	PLUMBING PLAN AREA B
P2.7	ENLARGED PLUMBING PLANS
P2.8	PLUMBING SECTIONS
P3.1	PLUMBING RISER DIAGRAMS
P3.2	PLUMBING RISER DIAGRAMS
P4.1	PLUMBING SCHEDULES
P4.2	PLUMBING SCHEDULES
P5.1	PLUMBING DETAILS
P5.2	PLUMBING DETAILS
15	
MECHANICAL	
M0.1	MECHANICAL LEGENDS & ABBREVIATION
M2.1	MECHANICAL PLAN OVERALL
M2.2	MECHANICAL PLAN AREA A
M2.3	MECHANICAL PLAN AREA B
M2.4	MECHANICAL PIPING PLAN AREA A
M2.5	MECHANICAL PIPING PLAN AREA B
M2.6	ENLARGED MECHANICAL PLANS
M2.7	MECHANICAL SECTIONS
M2.8	MECHANICAL SECTIONS
M2.9	MECHANICAL ISOMETRIC VIEWS
M2.10	MECHANICAL DOAS SECTIONS
M2.11	MECHANICAL DUST COLLECTOR SECTIONS
M3.1	MECHANICAL AIRFLOW DIAGRAM
M4.1	MECHANICAL SCHEDULES
M4.2	MECHANICAL SCHEDULES
M5.1	MECHANICAL DETAILS
M5.2	MECHANICAL DETAILS
M6.1	MECHANICAL CONTROL DIAGRAMS
M6.2	MECHANICAL CONTROL DIAGRAMS
M6.3	MECHANICAL CONTROL DIAGRAMS
20	
ELECTRICAL	
E0.1	ELECTRICAL LEGENDS & ABBREVIATION
E1.1	ELECTRICAL SITE PHOTOMETRIC PLAN
E1.2	ELECTRICAL OVERALL SITE PLAN
E2.1	OVERALL ELECTRICAL POWER PLAN
E2.2	ELECTRICAL POWER PLAN AREA A
E2.3	ELECTRICAL POWER PLAN AREA B
E2.4	OVERALL MEP POWER PLAN
E2.5	MECHANICAL / PLUMBING POWER PLAN AREA A
E2.6	MECHANICAL / PLUMBING POWER PLAN AREA B
E2.7	LIGHTING PLAN OVERALL
E2.8	LIGHTING PLAN AREA A
E2.9	LIGHTING PLAN AREA B
E2.10	ENLARGED ELECTRICAL PLANS
E3.1	ELECTRICAL SINGLE LINE DIAGRAM
E4.1	ELECTRICAL SCHEDULES
E4.2	ELECTRICAL SCHEDULES
E4.3	ELECTRICAL SCHEDULES
E5.1	ELECTRICAL DETAILS
E5.2	LIGHTING CONTROLS - INTERIOR
E5.3	LIGHTING CONTROLS - EXTERIOR
E5.4	LIGHTING CONTROLS - RISER DIAGRAM
E5.5	LIGHTING - EMERGENCY EGRESS PHOTOMETRICS
22	
FUEL	
FS1.0	FLOOR PLAN AREA D
FS1.1	FUEL STATION DETAILS
FS1.2	FUEL STATION DETAILS
FS1.3	FUEL STATION SCHEDULES & ELEVATIONS
4	
TELECOMMUNICATIONS	
T0.1	TELECOM / SECURITY LEGENDS & ABBREVIATION
T1.2	TELECOM / SECURITY SITE PLAN
T2.1	OVERALL TELECOM / SECURITY PLAN
T2.2	TELECOM / SECURITY PLAN AREA A
T2.3	TELECOM / SECURITY PLAN AREA B
T3.1	MDF ENLARGED DETAILS
T7.1	TELECOM / SECURITY DETAILS
7	
TOTAL: 162	

McKinney Area Engineering and Maintenance Facility
PROJECT NUMBER: 18-470420012

COPYRIGHT © 2021 TEXAS DEPTARTMENT OF TRANSPORTATION

DRAWING ABBREVIATIONS

A	--------------------
A LABEL	CLASS A DOOR
A/C	AIR CONDITION
A/C	UNIT AIR CONDITIONING UNIT
A/E	ARCHITECT/ENGINEER
AB	ANCHOR BOLT
ACC	ACCESSIBLE
ACS	AUTOMATIC CONTROL SYSTEM
ACS DR	ACCESS DOOR
ACS PNL	ACCESS PANEL
ACT	ACOUSTICAL CEILING TILE
ADA	AMERICANS WITH DISABILITIES ACT
ADMIN	ADMINISTRATION
AFC	ABOVE FINISHED COUNTER
AFF	ABOVE FINISHED FLOOR
AFG	ABOVE FINISHED GRADE
AFS	ABOVE FINISHED SLAB
AGGR	AGGREGATE
AHU	AIR HANDLING UNIT
AIB	AIR INFILTRATION BARRIER
ALT	ALTERNATE
ALUM	ALUMINUM
ANOD	ANODIZE
APC	ACOUSTICAL PANEL CEILING
APPROX	APPROXIMATE
AR	AS REQUIRED
ARCH	ARCHITECT
ASC	ABOVE SUSPENDED CEILING
ASSY	ASSEMBLY
ATC	ACOUSTICAL TILE CEILING
AVG	AVERAGE
AW	ARCHITECTURAL WOODWORK
AWT	ACOUSTICAL WALL TREATMENT
B	--------------------
B LABEL	CLASS B DOOR
BALC	BALCONY
BB	BASEBOARD
BC	BOOKCASE
BD	BOARD
BDRY	BOUNDARY
BFF	BELOW FINISH FLOOR
BHMA	BUILDER'S HARDWARE MANUFACTURER'S ASSOCIATION
BLDG	BUILDING
BLKG	BLOCKING
BLT IN	BUILT-IN
BN	BULLNOSE
BOS	BOTTOM OF STEEL
BOT	BOTTOM
BP	BUILDING PAPER
BRKT	BRACKET
BSMT	BASEMENT
BTWN	BETWEEN
BUR	BUILT-UP ROOFING
C	--------------------
C CONC	CAST CONCRETE
C LABEL	CLASS C DOOR
CAB	CABINET
CATW	CATWALK
CAV	CAVITY
CBB	CEMENTITIOUS (BACKER) BOARD
CD	CONSTRUCTION DOCUMENTS
CDW	CHILLED DRINKING WATER
CEM PLAS	CEMENT PLASTER
CER	CERAMIC
CF	CONTRACTOR FURNISHED
CF/CI	CONTRACTOR FURNISHED/CONTRACTOR INSTALLED
CFE	CONTRACTOR FURNISHED EQUIPMENT
CFLG	COUNTERFLASHING
CFM	CUBIC FEET PER MINUTE
CFMF	COLD-FORMED METAL FRAMING
CFS	CUBIC FEET PER SECOND
CG	CORNER GUARD
CI	CAST IRON
CIP	CAST-IN-PLACE
CJ	CONTROL JOINT
CL	CENTER LINE
CLG	CEILING
CLG DIFF	CEILING DIFFUSER
CLG HT	CEILING HEIGHT
CLL	COLUMN LINE
CLO	CLOSET
CLR	COLOR
CLRM	CLASSROOM
CMU	CONCRETE MASONRY UNIT
CNDS	CONDENSATE
CDR	CARD READER
CO	CLEANOUT
COL	COLUMN
COMM	COMMUNICATION
CONC	CONCRETE
CONC FLR	CONCRETE FLOOR
CONF	CONFERENCE
CONT	CONTINUE
COORD	COORDINATE
CORR	CORRIDOR
CP	CONCRETE PIPE
CPT	CARPET
CR	CONTROL ROOM
CS	CAST STONE
CSWK	CASEWORK
CT	CERAMIC TILE
CTB	CERAMIC TILE BASE
CTF	CERAMIC TILE FLOOR
CTR	CENTER
CU FT	CUBIC FEET
CW	CASEMENT WINDOW
D	--------------------
D	DEPTH
D LABEL	CLASS D DOOR
DBL	DOUBLE
DEMO	DEMOLITION
DEPT	DEPARTMENT
DET	DETAIL
DIA	DIAMETER
DIR	DIRECTION
DIST	DISTANCE
DOC	DOCUMENT
DR	DOOR
DS	DOWNSPOUT
E	--------------------
E LABEL	CLASS E DOOR
EA	EACH
EF	EACH FACE
EIFS	EXTERIOR INSULATION AND FINISH SYSTEM
EJ	EXPANSION JOINT
ES	EACH SIDE
EL	ELEVATION
ELEV	ELEVATOR
ENTR	ENTRANCE
EPS	EXPANDED POLYSTYRENE BOARD (INSULATION)
EQ	EQUAL
EWC	ELECTRIC WATER COOLER
EXP	EXPOSED
EXT	EXTERIOR
EXT	EXTINGUISHER
EXT GR	EXTERIOR GRADE
GB	GRAB BAR
GFCI	GOVERNMENT FURNISHED CONTRACTOR INSTALLED
GB	GRAB BAR
GFCI	GOVERNMENT FURNISHED CONTRACTOR INSTALLED
GFGI	GOVERNMENT INSTALLED FURNISHED INSTALLED BY GOVERNMENT
GFRG	GLASS-FIBER-REINFORCED GYPSUM
GLZ	GLAZING
GR FL	GROUND FLOOR
GUT	GUTTER
GYP BD	GYPSUM BOARD
GYP PLAS	GYPSUM PLASTER
H	-------------
HB	HOSE BIBB
HDPE	HIGH DENSITY POLYETHYLENE
HDW	HARDWARE
HDWD	HARDWOOD
HEPA	HIGH EFFICIENCY PARTICULATE AIR (FILTER)
HM	HOLLOW METAL
HMD	HOLLOW METAL DOOR
HORIZ	HORIZONTAL
HT	HEIGHT
HYDR	HYDRAULIC
F	--------------------
FA	FIRE ALARM
FAAP	FIRE ALARM ANNUNCIATOR PANEL
FAS BD	FASCIA BOARD
FC BRK	FACE BRICK
FCO	FLOOR CLEANOUT
FD	FLOOR DRAIN
FDTN	FOUNDATION
FE	FIRE EXTINGUISHER
FEC	FIRE EXTINGUISHER CABINET
FED	FEDERAL
FF	FINISH FACE
FF EL	FINISH FLOOR ELEVATION
FF INSUL	FOIL BACKED INSULATION
FGL	FIBERGLASS
FH	FIRE HOSE
FHP	FULL HEIGHT PARTITION
FIN	FINISH
FIN BS	FINISH BOTH SIDES
FIN FLR	FINISH FLOOR
FIN GR	FINISH GRADE
FIXT	FIXTURE
FLDG	FOLDING
FLEX	FLEXIBLE
FLG	FLOORING
FLMT	FLUSH MOUNT
FLR	FLOOR
FM	FACTORY MUTUAL
FOC	FACE OF CONCRETE
FOM	FACE OF MASONRY
FR	FIRE RESISTANT
FRG	FIBER REINFORCED GYPSUM
FRMG	FRAMING
FRP	FIBERGLASS REINFORCED PLASTIC
FRTW	FIRE RETARDANT TREATED WOOD
FS	FEDERAL SPECIFICATION
FSTNR	FASTENER
FT	FEET
FTG	FOOTING
FWC	FABRIC WALLCOVERING
G	--------------------
G	NATURAL GAS
GALV	GALVANIZED
GB	GRAB BAR
GFCI	GOVERNMENT FURNISHED CONTRACTOR INSTALLED
GFGI	GOVERNMENT INSTALLED FURNISHED INSTALLED BY GOVERNMENT
GFRG	GLASS-FIBER-REINFORCED GYPSUM
GLZ	GLAZING
GR FL	GROUND FLOOR
GUT	GUTTER
GYP BD	GYPSUM BOARD
GYP PLAS	GYPSUM PLASTER
H	--------------------
HB	HOSE BIBB
HDPE	HIGH DENSITY POLYETHYLENE
HDW	HARDWARE
HDWD	HARDWOOD
HEPA	HIGH EFFICIENCY PARTICULATE AIR (FILTER)
HM	HOLLOW METAL
HMD	HOLLOW METAL DOOR
HORIZ	HORIZONTAL
HT	HEIGHT
HYDR	HYDRAULIC
I	--------------------
IBC	INTERNATIONAL BUILDING CODE
INSUL	INSULATION
INT	INTERIOR
ILO	IN LIEU OF
J	--------------------
JAN	JANITOR
K	--------------------
KPD	KEYPAD
KIT	KITCHEN
KPL	KICKPLATE
L	--------------------
LAM	LAMINATE
LAV	LAVATORY
LBR	LUMBER
LBS	POUND
LDG	LANDING
LF	LINEAR FEET (FOOT)
LIB	LIBRARY
LIN	LINEAR
LKR	LOCKER
LOC	LOCATION
LT	LIGHT
LVDR	LOUVER DOOR
LVR	LOUVER
M	--------------------
MACH RM	MACHINE ROOM
MATL	MATERIAL
MAX	MAXIMUM
MC	MOISTURE CONTENT
MD	METAL DECK
MECH	MECHANICAL
MECH RM	MECHANICAL ROOM
MEMB	MEMBRANE
MF	MILL FINISH
MFR	MANUFACTURER
MID	MIDDLE
MIL STD	MILITARY STANDARD
MIN	MINIMUM, MINUTE
MIRR	MIRROR
MISC	MISCELLANEOUS
MLDG	MOLDING (MOULDING)
MO	MASONRY OPENING
MOD	MODIFY
MB	MOISTURE BARRIER
MTG	MOUNTING
MTL	METAL
MVBL	MOVABLE
MWP	MEMBRANE WATERPROOFING
N	--------------------
N	NORTH
NA	NOT APPLICABLE
NFPA	NATIONAL FIRE PROTECTION ASSOCIATION
NIC	NOT IN CONTRACT
NO	NUMBER
NOM	NOMINAL
NP	NO PAINT
NRC	NOISE REDUCTION COEFFICIENT
NTS	NOT TO SCALE
O	-------------------
OA	OVERALL
OC	ON CENTER
OD	OUTSIDE DIAMETER
OFD	OVERFLOW DRAIN
OFF	OFFICE
OGL	OBSCURE GLASS
OPH	OPPOSITE HAND
OPNG	OPENING
OPP	OPPOSITE
OPQ	OPAQUE
OWSJ	OPEN WEB STEEL JOIST
OPR	OPERABLE
ORD	OVERFLOW ROOF DRAIN
ORIG	ORIGINAL
P	-------------------
P	PAINT
PAR	PARAPET
PAT	PATTERN
PB	PULL BOX
PBD	PARTICLEBOARD
PCC	PRECAST CONCRETE
PCF	POUNDS PER CUBIC FOOT
PCT	PERCENT
PERF	PERFORATED
PERIM	PERIMETER
PH	PHASE
PIL	PILASTER
PL	PROPERTY LINE
PL GL	PLATE GLASS
PLAM	PLASTIC LAMINATE
PLAS	PLASTER
PLBG	PLUMBING
PLG	PILING
PLYWD	PLYWOOD
PNL	PANEL
PP PL	PUSH/PULL PLATE
PR	PAIR
PRCST	PRECAST
PRKG	PARKING
PS CONC	PRESTRESSED CONCRETE
PSF	POUNDS PER SQUARE FOOT
PSI	POUNDS PER SQUARE INCH
PT	PRESSURE TREATED
PTD	PAPER TOWEL DISPENSER
PTDR	PAPER TOWEL DISPENSER AND RECEPTACLE
PTN	PARTITION
PWR	POWER
Q	-------------------
QT	QUARRY TILE
QTY	QUANTITY
R	-------------------
RB	RESILIENT BASE
RBM	REINFORCED BRICK MASONRY
RBR	RUBBER
RC	REINFORCED CONCRETE
RCP	REFLECTED CEILING PLAN
RD	ROOF DRAIN
RDG INS	RIGID INSULATION, SOLID
REC	RECESSED
REF	REFERENCE
REM	REMOVABLE
REP	REPAIR
REPL	REPLACE
REQ	REQUIRE
REQD	REQUIRED
RESIL	RESILIENT
REST	RESTROOM
RF	RESILIENT FLOORING
RFG	ROOFING
RH	ROOF HATCH
RHR	RIGHT HAND REVERSE
RL	ROOF LEADER
RLG	RAILING
RM	ROOM
RO	ROUGH OPENING
RSD	ROLLING STEEL DOOR
RV	ROOF VENT
RVL	REVEAL
S	-------------------
SB	SPLASH BLOCK
SCHED	SCHEDULE
SD	SMOKE DETECTOR
SF	SQUARE FOOT (FEET)
SFTWD	SOFTWOOD
SGL	SINGLE
SHT MTL FLASH	SHEET METAL (FLASHING)
SHTHG	SHEATHING
SHV	SHELVING
SIM	SIMILAR
SJ	SCORED JOINT
SKLT	SKYLIGHT
SLNT	SEALANT
SMK	SMOKE
SMLS	SEAMLESS
SP EL	SPOT ELEVATION
SPEC	SPECIFICATION
SQ	SQUARE
SQ IN	SQUARE INCH
SQ YD	SQUARE YARD
SST	STAINLESS STEEL
ST	STAIRS
STD	STANDARD
STN	STAINED
STL JST	STEEL JOIST
STL RF DK	STEEL ROOF DECK
STOR	STORAGE
STR	STRINGERS
STRB/HRN	STROBE/HORN
SUB FL	SUBFLOOR
SV	SHEET VINYL
SW	SIDEWALK
T	-------------------
T	TREAD
T/S	TUB/SHOWER
TC	TERRA COTTA
TD	TRENCH DRAIN
TEL	TELEPHONE
TEMP	TEMPORARY
TER	TERRAZZO
TFF	TOP OF FINISH FLOOR
THK	THICKNESS
TK BD	TACKBOARD
TMPD GL	TEMPERED GLASS
TN	TRUE NORTH
TOF	TOP OF FOOTING
TOM	TOP OF MASONRY
TOP	TOP OF PARAPET
TOPO	TOPOGRAPHY
TOS	TOP OF SLAB
TRANS	TRANSOM
TRTD	TREATED
TV	TELEVISION

LEGENDS

NUMBERING SYSTEM

AE.1.01

DISCIPLINE:
- C - CIVIL
- L - LANDSCAPE
- S - STRUCTURAL
- A - ARCHITECTURE
- AE - EQUIPMENT
- P - PLUMBING
- M - MECHANICAL
- E - ELECTRICAL

SERIES NUMBER

FLOOR LEVEL

SHEET NUMBER WITHIN SERIES

MATERIALS

- CONCRETE/ PRECAST CONCRETE
- SOIL
- SAND, EIFS FINISH COAT, OR CEMENT PLASTER
- BRICK
- CMU
- STONE
- FIBERGLASS BATT INSULATION
- FIBERGLASS SEMI RIGID INSULATION
- MINERAL WOOL SEMI RIGID INSULATION
- EXPANDED POLYSTYRENE RIGID INSULATION
- EXTRUDED POLYSTYRENE RIGID INSULATION
- POLYISOCYANURATE RIGID INSULATION
- GYPSUM BOARD
- EXTERIOR GYPSUM SHEATHING
- EXTERIOR CEMENT BOARD
- COATED GLASS MAT WATER RESISTANT GYP BD
- PLYWOOD
- COVER BOARD

FIRE RATED WALL SYMBOLS:
- 1 HR FIRE
- 3 HR FIRE

ANNOTATION CALLOUTS/DRAWING SYMBOLS

- INTERIOR ELEVATION (1, Ref, A101)
- PLATE NUMBER WHERE SECTION/DETAIL IS DRAWN
- ELEVATION NUMBER
- EXTERIOR ELEVATION (1, A101)
- PLATE NUMBER WHERE SECTION/DETAIL IS DRAWN
- SECTION (1, A101)
- PLATE NUMBER WHERE SECTION/DETAIL IS DRAWN
- ENLARGEMENT, DETAIL (1, A-101)
- PLATE NUMBER WHERE SECTION/DETAIL IS DRAWN
- SPOT ELEVATION
- Name Elevation — FLOOR LEVEL & NAME
- 010 — SHEET KEYNOTE
- 010 — SHEET KEYNOTE DEMOLITION
- Room name 101 — ROOM NAME/NUMBER
- 01 — WINDOW TYPE
- 1i — WALL TYPE
- 0 — GRID / COLUMN LINE DESIGNATOR
- 1i — EQUIPMENT NUMBER
- 101 — DOOR NUMBER
- 1 — REVISION TAG
- PLAN NORTH — NORTH ARROW w/ TRUE NORTH INDICATION
- Room Rm_Occupancy 101 150 SF — ROOM OCCUPANCY & AREA
- EGRESS :Egress_ID Egress_Length — EGRESS ROUTE ID AND SECTION LENGTH

CEILING SYMBOLS

- 2' x 2' ACT CEILING
- 4' x 4' ACT CEILING
- 1' x 1' ACT CEILING
- GYP. BD. CEILING
- 2 X 4 LIGHT FIXTURE
- RETURN AIR GRILLE
- SUPPLY AIR GRILLE
- EXHAUST AIR GRILLE
- EXIT LIGHT
- 2 x 2 LIGHT FIXTURE
- SUSP. FLUORESCENT LIGHT

FLOOR PLAN LEGEND

- EXISTING PARTITION TO REMAIN
- NEW PARTITION
- NOT IN SCOPE
- REPLACED, REPAIR, AND PATCHED AREA

DEMO PLAN LEGEND

- EXISTING PARTITION TO REMAIN
- EXISTING PARTITION TO BE REMOVED
- EXISTING TO BE REMOVED
- REMOVE EXIST. DOOR AND DOOR FRAME SYSTEM
- AREA OF EXISTING MASONRY WALL TO BE REMOVED; REFER TO STRUCTURAL FOR NEW LINTELS
- APPROX. LOCATION AND SIZE OF EXIST. CONC. FLOOR SLAB TO BE REMOVED FOR NEW WORK. RE: MEP AND STRUCTURAL FOR BACK-FILL AND PATCHING

GENERAL NOTES

1. WORK SHALL CONFORM TO THE CONSTRUCTION DOCUMENTS & ALL APPLICABLE BUILDING CODES (INCLUDING FEDERAL & STATE CODES, ORDINANCES, REGULATIONS, ETC.) CONSTRUCTION DOCUMENTS INCLUDE CIVIL, LANDSCAPE, ARCHITECTURAL, STRUCTURAL, MEP DRAWINGS & SPECIFICATIONS PLUS ANY ADDENDA TO THE AFOREMENTIONED.

2. CONSTRUCTION DOCUMENTS ARE INTENDED TO INCLUDE ITEMS NECESSARY TO CONVEY DESIGN INTENT OF THE WORK. MANUFACTURERS' INSTRUCTIONS SHALL BE CONSIDERED AS PART OF THE SPECIFICATIONS WHETHER INCLUDED OR NOT IN THE SPECIFICATION MANUAL.

3. PERIODIC SITE VISITS BY OWNER'S REPRESENTATIVE SHALL NOT BE CONSTRUED AS SUPERVISION OF MEANS, METHODS, TECHNIQUES, SEQUENCES OR PROCEDURES FOR CONSTRUCTION, NOR IMPLY RESPONSIBILITY FOR PROVIDING A SAFE PLACE FOR PERFORMANCE OF WORK BY CONTRACTOR OR CONTRACTOR'S EMPLOYEES, OR EMPLOYEES OF SUPPLIERS, OR FOR ACCESS, VISITS, USE, WORK, TRAVEL, OR OCCUPANCY BY ANY PERSON.

4. CONTRACTOR SHALL:
- VERIFY DIMENSIONS & FIELD CONDITIONS BEFORE PROCEEDING.
- NOTIFY ARCHITECT OF FIELD CONDITIONS REQUIRING DEVIATIONS FROM CONSTRUCTION DOCUMENTS BEFORE THE CONSTRUCTION OF ANY MODIFICATION.
- PROVIDE ADEQUATE BRACING & SHORING AS NECESSARY UNTIL PERMANENT SUPPORTS & STIFFENERS ARE INSTALLED.
- IMMEDIATELY REPAIR OR REPLACE DAMAGED OR DEFECTIVE WORK TO THE APPROVAL OF (AND AT NO ADDITIONAL COST TO) THE OWNER
- NOTIFY ARCHITECT & APPROPRIATE INSPECTORS AT CRITICAL CONSTRUCTION MILESTONES IN ORDER TO OBTAIN NECESSARY APPROVALS & INSPECTIONS PRIOR TO COMMENCEMENT OF SUBSEQUENT WORK.
- TAKE REASONABLE PRECAUTIONS FOR THE SAFETY OF, AND PROVIDE REASONABLE PROTECTION TO PREVENT DAMAGE, INJURY OR LOSS TO:
  a) EMPLOYEES & ALL OTHER AFFECTED PERSONS
  b) ALL WORK, MATERIALS & EQUIPMENT
  c) OTHER PROPERTY AT SITE OR ADJACENT THERETO.
- UPON COMPLETION OF THE WORK, REMOVE MATERIALS, TOOLS & EQUIPMENT AND LEAVE SITE IN A CONDITION ACCEPTABLE TO OWNER.

Texas Department of Transportation

COPYRIGHT © 2021

Jacobs
1999 Bryan Street, Suite 1200
Dallas, Tx 75201
JACOBS ENGINEERING GROUP, INC
TEXAS REGISTRATION #2966

REGISTERED ARCHITECT STEVEN JOHN TREMMEL 19414 STATE OF TEXAS
04/21/2021

DALLAS DISTRICT (18)
COLLIN COUNTY
McKinney Area Engineering and Maintenance Facility
2205 TX-5, McKinney, TX 75069
PROJECT NO. 18-470420012

ISSUED: 2021.04.21
DRAWN BY: K. McBride
REVISIONS:

ABBREVIATIONS & SYMBOLS

G0.1

THIS DRAWING CREATED FOR PRODUCTION ON 22"x34" SHEET SIZE. DO NOT SCALE PRINTS.

SECTION 502
PARKING STALLS

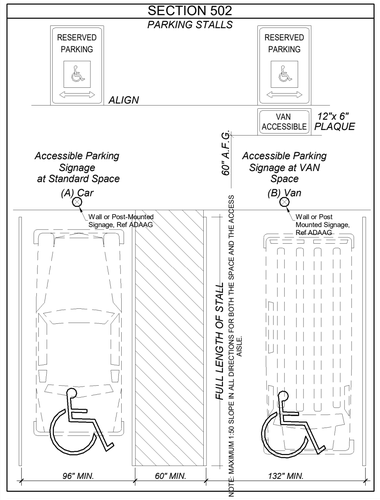

SECTION 307
PROTRUDING OBJECTS

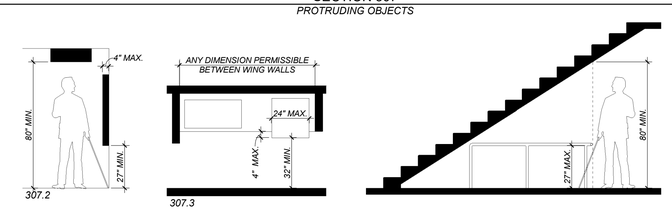

SECTION 308
REACH RANGES

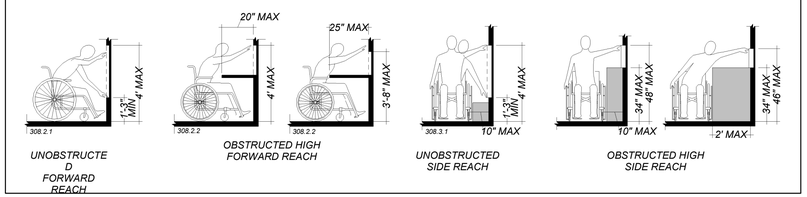

SECTION 305
CLEAR FLOOR SPACE

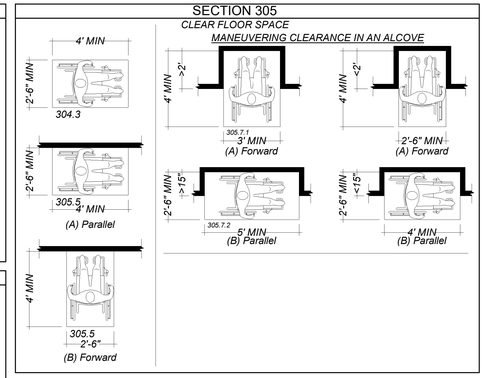

SECTION 306
CLEAR TOE SPACE

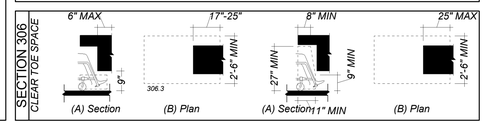

SECTION 304
TURNING SPACE

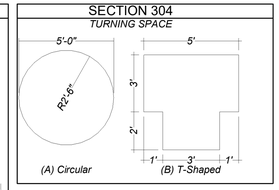

SECTION 900
BUILT-IN ELEMENTS

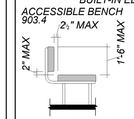

SALES AND SERVICE COUNTER
904.4.1
Parallel Approach . *A portion of the counter surface that is 36" long min. & 36" high max. above the finish floor shall be provided. A clear floor or ground space complying with 305 shall be positioned for a parallel approach adjacent to the 36" min. length of counter.*

904.4.2
Forward Approach . *A portion of the counter surface that is 30" long min. & 36" high max. above the finish floor shall be provided. Knee and tow space complying w/ 306 shall be provided under the counter. A clear floor or ground space complying w/ 305 shall be positioned for a forward approach to the counter.*

SECTION 302
FLOOR OR GROUND SURFACES

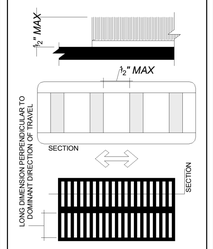

SECTION 303
CHANGES IN LEVEL

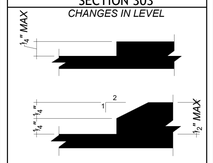

SECTION 600
PLUMBING ELEMENTS AND FACILITIES

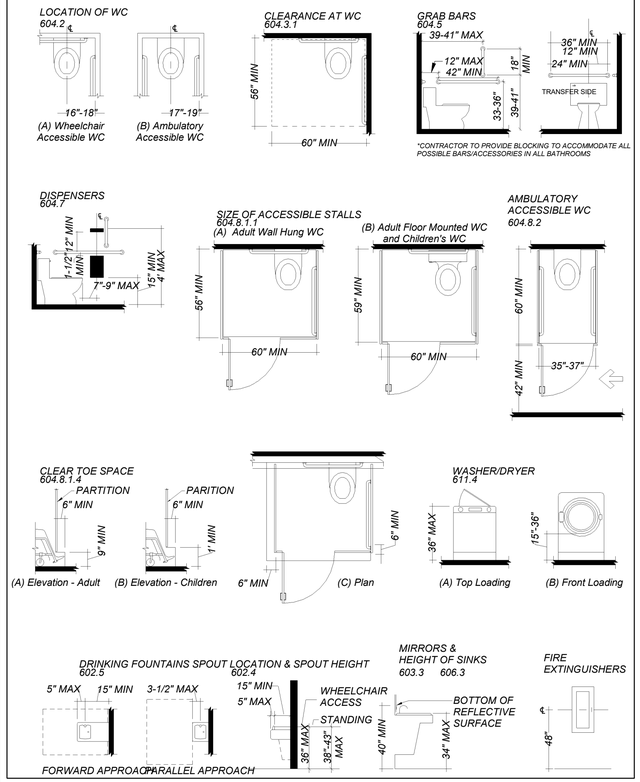

SECTION 404
Doors, Doorways, and Gates

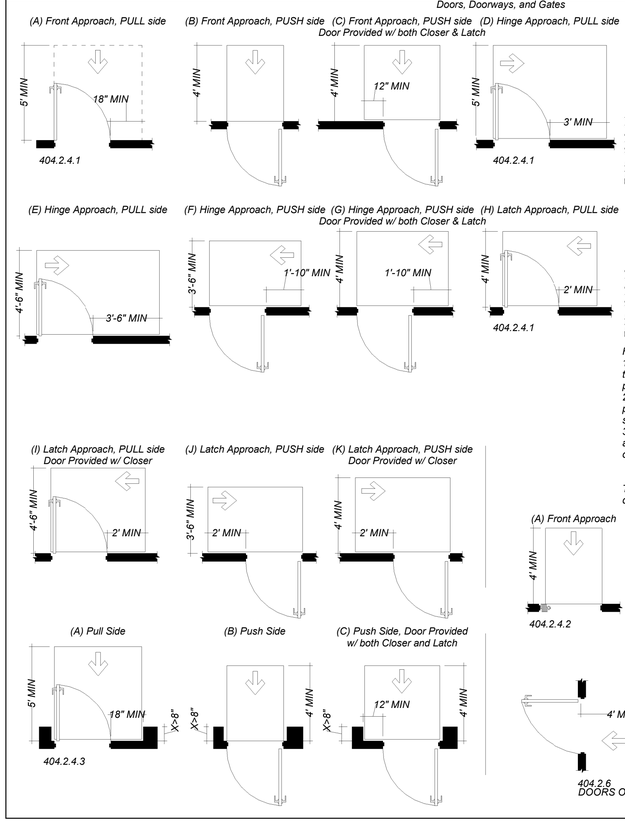

TYPE OF USE		MIN MANEUVERING CLEARANCE	
APPROACH DIRECTION	APPROACH SIDE	PERPENDICULAR TO DOORWAY	PARALLEL TO DOORWAY
FROM FRONT	PULL	60"	18"
FROM FRONT	PUSH	48"	0"
FROM HINGE SIDE	PULL	60"	36"
FROM HINGE SIDE	PULL	54"	42"
FROM HINGE SIDE	PUSH	42"[3]	22"
FROM LATCH SIDE	PULL	48"[4]	24"
FROM LATCH SIDE	PUSH	42"[5]	24"

1. ADD 12" IF CLOSER AND LATCH ARE PROVIDED
2. ADD 6" IF CLOSER AND LATCH ARE PROVIDED
3. BEYOND HINGE SIDE
4. ADD 6" IF CLOSER IS PROVIDED
5. BEYOND LATCH SIDE UNLESS NOTED OTHERWISE

Table 404.2.4.1

MANEUVERING CLEARANCES AT DOORWAYS W/O DOORS

	MINIMUM MANEUVERING CLEARANCE	
APPROACH DIRECTION	PERPENDICULAR TO DOORWAY	PARALLEL TO DOORWAY
FROM FRONT	48"	0"
FROM SIDE	42"	0"
FROM PKT/HINGE	42"	22"
FROM STOP/LATCH	42"	22"

1. DOORWAY WITH NO DOOR
2. BEYOND POCKET/HINGE SIDE

Table 404.2.4.2

HARDWARE REQUIREMENTS
1. Door Closers and Gate Closers. Door closers and gate closers shall be adjusted so that from an open position of 90 degrees, the time required to move the door to a position of 12 degrees from the latch is 5 seconds minimum.
2. Spring Hinges. Door and gate spring hinges shall be adjusted so that from the open position of 70 degrees, the door or gate shall move to the closed position in 1.5 seconds minimum.
3. Door and Gate Opening Force. Fire doors shall have a minimum opening force allowable by the appropriate administrative authority. The force for pushing or pulling open a door or gate other than fire doors shall be as follows:
1. Interior hinged doors and gates: 5 pounds (22.2 N) maximum.
2. Sliding or folding doors: 5 pounds (22.2 N) maximum.
These forces do not apply to the force required to retract latch bolts or disengage other devices that hold the door or gate in a closed position.

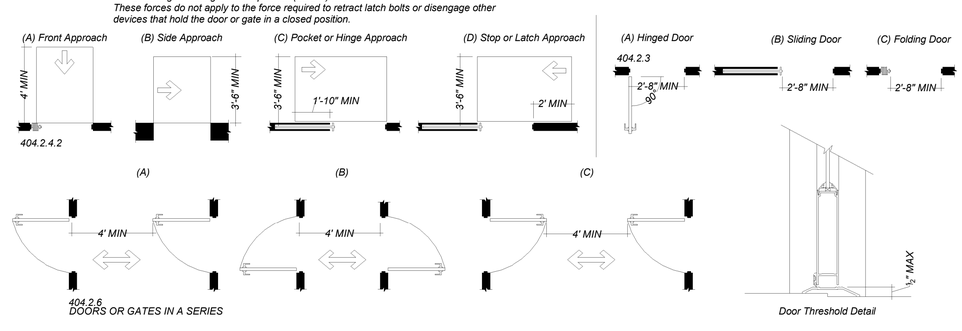

SECTION 403
Walking Surfaces

1. *Running Slope not to be greater than 1:20*
2. *Cross Slope not to be greater than 1:48*

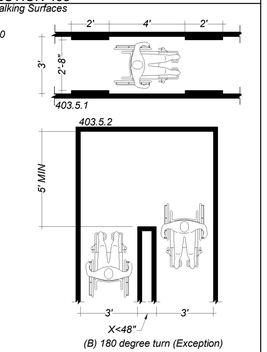

GENERAL NOTES:
THIS SHEET IS AN ABRIDGED OVERVIEW OF ARCHITECTURAL BARRIERS TEXAS ACCESSIBILITY STANDARDS (TAS 2012). ARCHITECT ASSUMES NO RESPONSIBILITY FOR THE ACCURACY OF DIAGRAMS, TABLES & NOTES ON THIS SHEET.
SOME DIAGRAMS AND/OR SECTIONS MAY NOT BE APPLICABLE. INCLUSION OF SUPERFLUOUS DIAGRAMS / NOTES SHALL NOT IMPART ANY RESPONSIBILITY ON ARCHITECT WHATSOEVER.
SOME DIAGRAMS / NOTES MAY NOT BE DEPICTED HEREIN. CONTRACTOR SHALL CONSULT COMPLETE CODE & NOTIFY ARCHITECT OF DISCREPANCIES.

Texas Department of Transportation
COPYRIGHT © 2021

Jacobs
1999 Bryan Street, Suite 1200
Dallas, Tx 75201
JACOBS ENGINEERING GROUP, INC
TEXAS REGISTRATION #2966
REGISTERED ARCHITECT
STATE OF TEXAS
04/21/2021

DALLAS DISTRICT (18)
COLLIN COUNTY
McKinney Area Engineering and Maintenance Facility
2205 TX-5, McKinney, TX 75069
PROJECT NO. 18-470420012

ISSUED: 2021.04.21
DRAWN BY: K. McBride
REVISIONS:

ACCESSIBILITY DETAILS
G1.1

THIS DRAWING CREATED FOR PRODUCTION ON 22"x34" SHEET SIZE. DO NOT SCALE PRINTS.

SECTION 700
COMMUNICATION ELEMENTS

**ALL SIGNAGE DESIGN/SPECIFICATION BY OTHERS UNLESS EXPLICITLY NOTED OTHERWISE IN CONTRACT DOCUMENTS.*

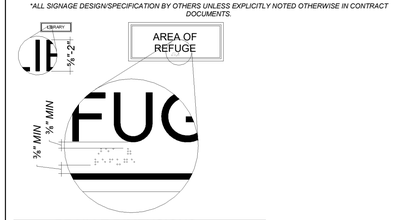

BRAILLE DIMENSIONS

	MEASUREMENT RANGE	MINIMUM/MAXIMUM
A	DOT BASE DIAMETER	0.059" (1.5mm) to 0.063" (1.6mm)
B	DIST B/W 2 DOTS IN SAME CELL	0.090" (2.3mm) to 0.100" (2.5mm)
C	DIST B/W CORRESPONDING DOTS IN ADJACENT CELLS	0.241" (6.1mm) to 0.300" (7.6mm)
D	DOT HEIGHT	0.025" (0.6mm) to 0.037" (0.9mm)
E	DIST B/W CORRESPONDING DOTS FROM 1 CELL DIRECTLY BELOW	0.395" (10mm) to 0.400" (10.2mm)

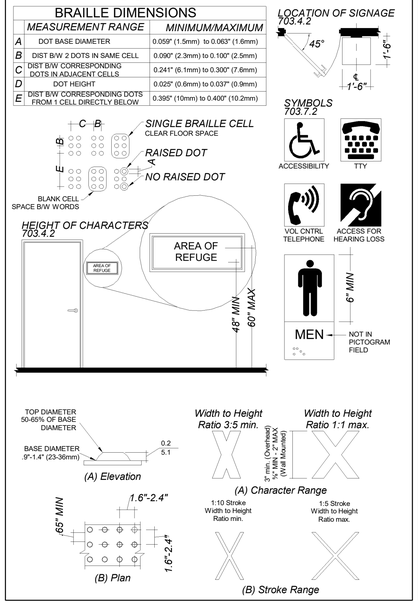

SECTION 504
STAIRWAYS

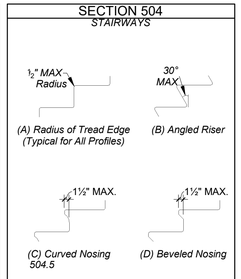

SECTION 505
HANDRAILS

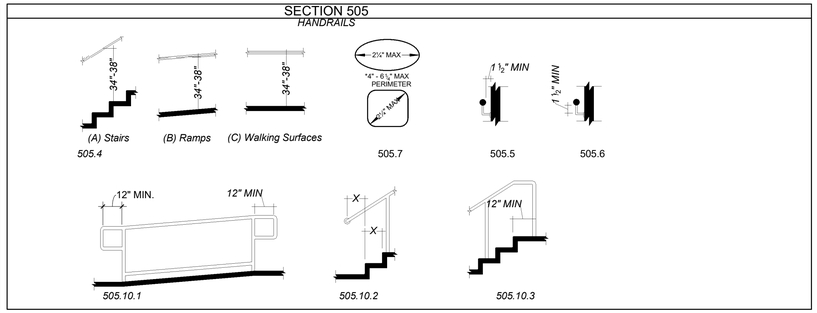

SECTION 405
Ramps

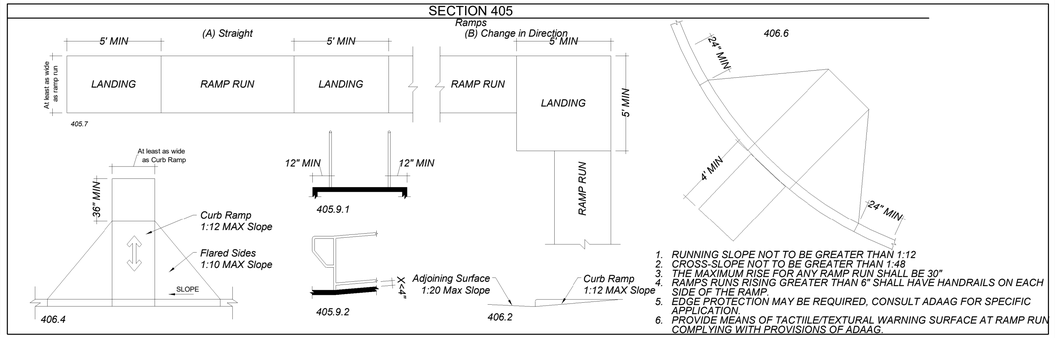

1. *RUNNING SLOPE NOT TO BE GREATER THAN 1:12*
2. *CROSS-SLOPE NOT TO BE GREATER THAN 1:48*
3. *THE MAXIMUM RISE FOR ANY RAMP RUN SHALL BE 30"*
4. *RAMPS RUNS RISING GREATER THAN 6" SHALL HAVE HANDRAILS ON EACH SIDE OF THE RAMP.*
5. *EDGE PROTECTION MAY BE REQUIRED, CONSULT ADAAG FOR SPECIFIC APPLICATION.*
6. *PROVIDE MEANS OF TACTIILE/TEXTURAL WARNING SURFACE AT RAMP RUN COMPLYING WITH PROVISIONS OF ADAAG.*

GENERAL NOTES: THIS SHEET IS AN ABRIDGED OVERVIEW OF ARCHITECTURAL BARRIERS TEXAS ACCESSIBILITY STANDARDS (TAS 2012). ARCHITECT ASSUMES NO RESPONSIBILITY FOR THE ACCURACY OF DIAGRAMS, TABLES & NOTES ON THIS SHEET. SOME DIAGRAMS AND/OR SECTIONS MAY NOT BE APPLICABLE. INCLUSION OF SUPERFLUOUS DIAGRAMS / NOTES SHALL NOT IMPART ANY RESPONSIBILITY ON ARCHITECT WHATSOEVER. SOME DIAGRAMS / NOTES MAY NOT BE DEPICTED HEREIN. CONTRACTOR SHALL CONSULT COMPLETE CODE & NOTIFY ARCHITECT OF DISCREPANCIES.

Texas Department of Transportation

COPYRIGHT © 2021

Jacobs
1999 Bryan Street, Suite 1200
Dallas, Tx 75201

JACOBS ENGINEERING GROUP, INC
TEXAS REGISTRATION #2966

REGISTERED ARCHITECT STEVEN JOHN TREMBLAY STATE OF TEXAS

04/21/2021

DALLAS DISTRICT (18)
COLLIN COUNTY
McKinney Area Engineering and Maintenance Facility
2205 TX-5, McKinney, TX 75069

PROJECT NO. 18-470420012

ISSUED: 2021.04.21
DRAWN BY: K. McBride
REVISIONS:

ACCESSIBILITY DETAILS (CONT.)

G1.2

THIS DRAWING CREATED FOR PRODUCTION ON 22"x34" SHEET SIZE. DO NOT SCALE PRINTS.

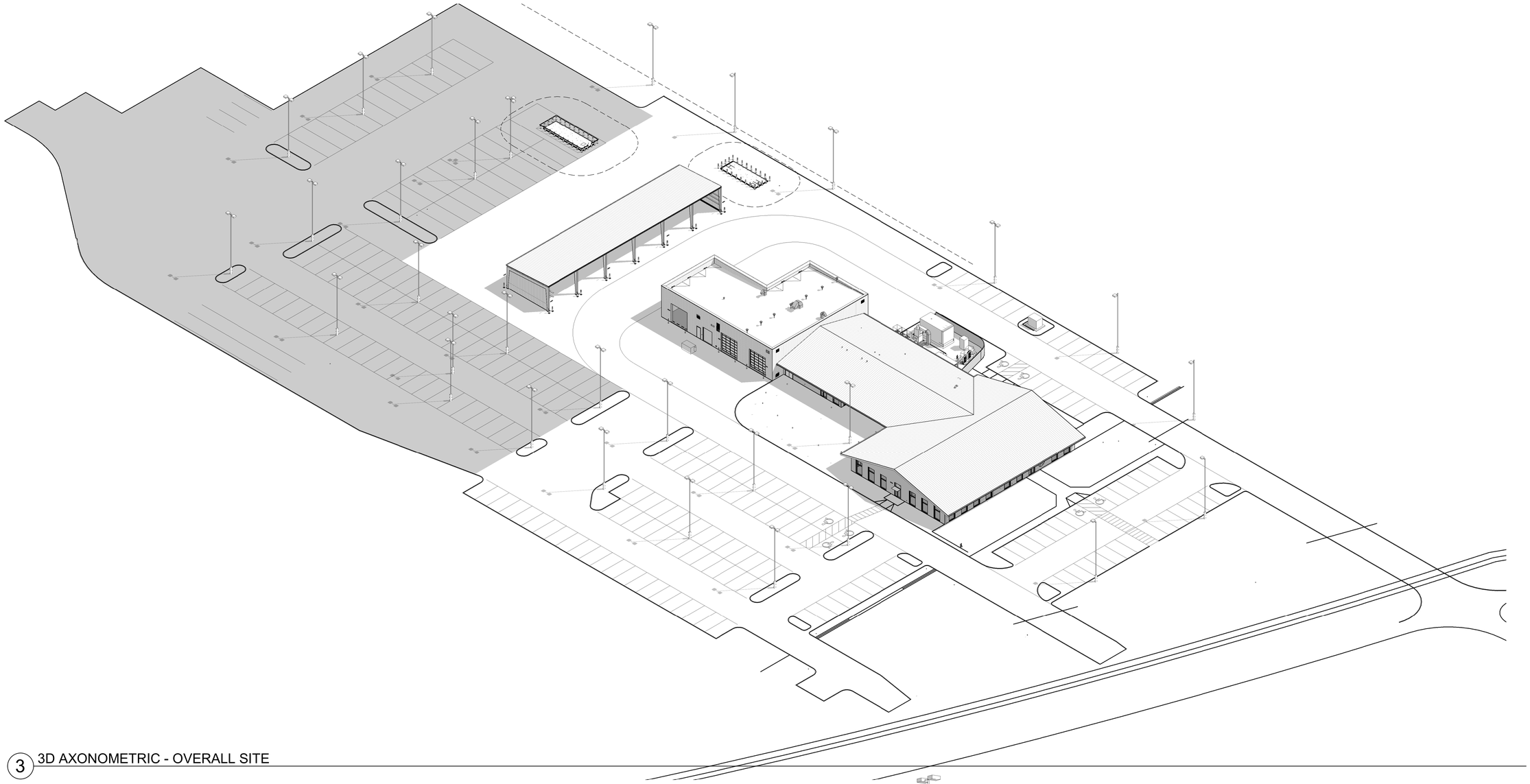

3 3D AXONOMETRIC - OVERALL SITE

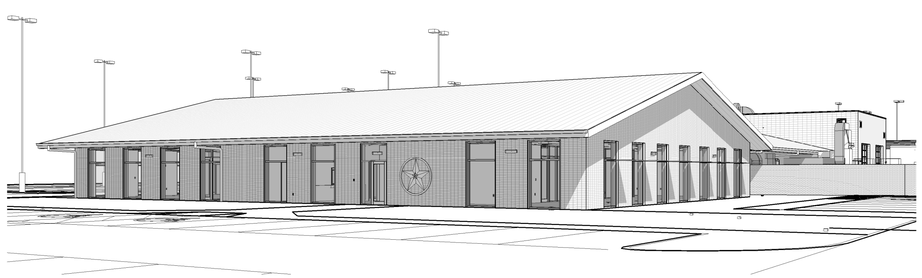

1 3D PERSPECTIVE - VISITOR/EMPLOYEE ENTRY

2 3D PERSPECTIVE - FROM SH5

Texas Department of Transportation

COPYRIGHT © 2021

Jacobs
1999 Bryan Street, Suite 1200
Dallas, Tx 75201

JACOBS ENGINEERING GROUP, INC
TEXAS REGISTRATION #2966

REGISTERED ARCHITECT
STEVEN JOHN TREMME
STATE OF TEXAS
04/21/2021

DALLAS DISTRICT (18)
COLLIN COUNTY
McKinney Area Engineering and Maintenance Facility
2205 TX-5, McKinney, TX 75069
PROJECT NO. 18-470420012

ISSUED: 2021.04.21
DRAWN BY: Author
REVISIONS:

3D VIEWS
G3.1

THIS DRAWING CREATED FOR PRODUCTION ON 22"x34" SHEET SIZE. DO NOT SCALE PRINTS.

2 KEY NOTES

- (A) REMOVE CONCRETE FLUME
- (B) REMOVE CONCERETE CURB & GUTTER
- (C) REMOVE HEADWALL
- (D) REMOVE CMP MITERED END SECTION
- (E) REMOVE PIPE
- (F) REMOVE LIGHT POLE
- (G) REMOVE TREE, COORDINATE W/ LANDSCAPE
- (H) REMOVE MISC CONCRETE STRUCTURE
- (I) REMOVE FENCE
- (J) REMOVE GATE & SECURITY PEDESTALS. RETURN PEDESTALS TO TXDOT FOR ATTIC STOCK.
- (K) BUILDING TO DEMOLISH IN PHASE 2
- (L) TREE TO BE PRESERVED, COORDINATE W/ LANDSCAPE
- (M) BUILDING TO BE RELOCATED BY TXDOT. CONTRACTOR TO REMOVE FOUNDATION
- (N) FUELING TO BE RELOCATED BY TXDOT. CONTRACTOR TO REMOVE CONCRETE PAD, BOLLARDS, POWER AND DATA ONLY
- (O) OLD SPREADER RACKS TO BE DEMOLISHED
- (P) CONEX STORAGE CONTAINERS TO BE RELOCATED BY TXDOT
- (Q) BUILDING AND FOUNDATION HAVE ALREADY BEEN REMOVED BY TXDOT
- (R) REMOVE LIGHTS SAVED FOR RELOCATION, REFER TO ELECTRICAL
- (S) ANTENNA AND FOUNDATION TO BE REMOVED

PROJECT CONTROL

GRID					SURFACE		GEOGRAPHIC DMS	
PID	Northing	Easting	Elevation	Decription	Northing	Easting	Latitude	Longitude
CP101	7112376.730	2540791.024	594.978	ALC^3.25INTXDOTCONTROLMARKDRILLEDINCONC	7113462.861	2541179.028	33 09 58.99401	96 37 46.57252
CP102	7112781.004	2541045.777	589.466	ALC^3.25INTXDOTCONTROLMARKDRILLEDINCONC	7113867.197	2541433.820	33 10 02.94874	96 37 43.49108
F0430250	7108686.757	2542016.799	605.942	ALC^3-1/2IN TXDOT CONTROL MARK	7109772.325	2542404.990	33 09 22.27164	96 37 32.92789
F0430260	7114284.053	2541420.110	570.498	ALC^3-1/2IN TXDOT CONTROL MARK	7115370.475	2541808.210	33 10 17.75292	96 37 38.77246

PRIMARY SURVEY CONTROL SET BY LTRA MAY 2020
DATUM: TEXAS NORTH CENTRAL 4202, NGS 2010 ADJUSTMENT,
NAVD 88 ADJUSTMENT 2011, USING GEOID 12A, CSF:1.000152710 COLLIN CO.
HORIZONTAL AND VERTICAL WERE DERIVED FROM BASE-ROVER OBSERVATIONS; THREE,
3 MINUTE (180 EPOCH) OBSERVATIONS, AVERAGED. HOLDING EXISTING TXDOT CONTROL
MONUMENTS F0430260 & F0430250

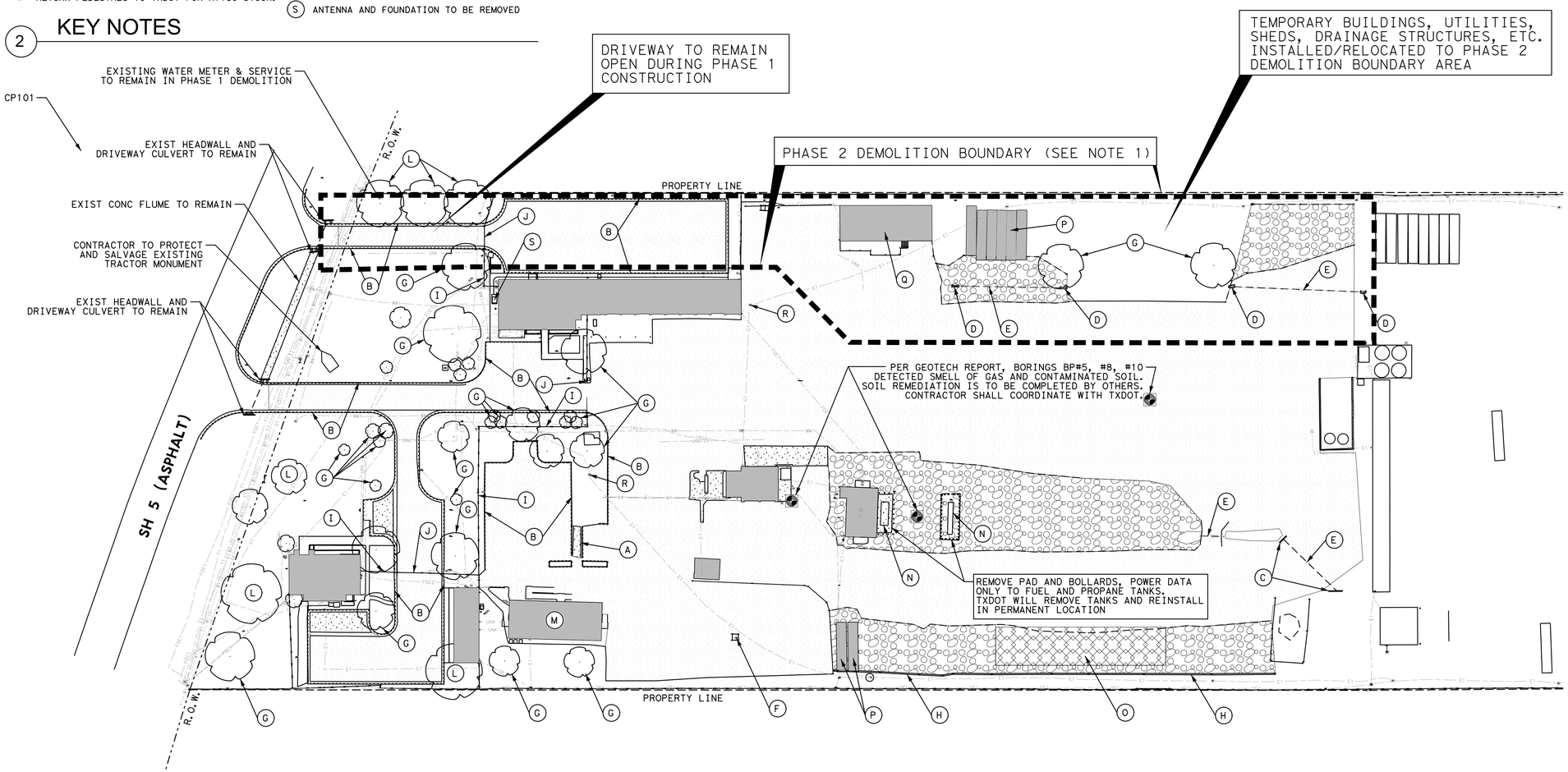

1 DEMOLITION PLAN

N

0 25′ 50′ 100′
1"=50′

NOTES:

1. AREA OUTSIDE OF PHASE 2 DEMOLITION BOUNDARY WILL BE PART OF PHASE 1 DEMOLITION AND CONSTRUCTION.
2. CONTRACTOR SHALL PROVIDE TEMPORARY CHAIN LINK CONSTRUCTION FENCING ALONG PERIMETER OF PROJECT BOUNDARY TO ENSURE SAFETY AND SECURITY OF THE CONSTRUCTION SITE.
3. CONTRACTOR TO COORDINATE WITH TxDOT FOR A DETAILED PLAN FOR CONSTRUCTION OF PROPOSED IMPROVEMENTS. SOME IMPROVEMENTS SHALL BE CONSTRUCTED OR INSTALLED PRIOR TO REMOVAL OF ON-SITE EXISTING FACILITIES.
4. STAGING AREAS AND ON-SITE STORAGE OF CONTRACTOR EQUIPMENT SHALL BE REVIEWED AND APPROVED BY TxDOT PRIOR TO THE BEGINNING OF CONSTRUCTION.

LEGEND:

- ASPHALT PAVING & BASE TO BE REMOVED
- GRAVEL PAVING TO BE REMOVED
- CONCRETE PAVING & BASE TO BE REMOVED
- BUILDING AND FOUNDATION TO BE DEMOLISHED AND REMOVED, REFER TO SPECIFICATIONS

GENERAL CONSTRUCTION NOTES:

1. ALL MATERIAL AND CONSTRUCTION SHALL CONFORM TO TXDOT STANDARD SPEC NOV. 2014, THE CITY OF MCKINNEY AND NCTCOG STANDARD SPECIFICATION FOR PUBLIC WORKS CONSTRUCTION. ALL CONSTRUCTION OPERRATIONS SHALL BE ACCOMPLISHED IN ACCORDANCE WITH APPLICABLE STATE STATUTES AND U.S. OCCUPATIONAL SAFETY GOVERNMENT PRINTING OFFICE.
2. ALL DIMENSIONS GIVEN ARE TO FACE OF CURB (6" FROM BOC) AND TO PIPE CENTERLINES UNLESS OTHERWISE NOTED ON PLANS.
3. CONTRACTOR SHALL ASSURE THAT ALL CONSTRUCTION PERMITS HAVE BEEN OBTAINED PRIOR TO COMMENCEMENT OF WORK. REQUIRED PERMITS THAT CAN BE ISSUED TO CONTRACTOR WILL BE OBTAINED AT THEIR EXPENSE.
4. THE ESTIMATED QUANTITIES PUBLISHED WITH THESE CONSTRUCTION DOCUMENTS ARE FURNISHED AS AN AID IN THE BIDDING PROCESS AND ARE NOT TO BE SUBSTITUTED FOR THE CONTRACTOR QUANTITY TAKE-OFFS.
5. UNDERGROUND SURFACE, AND AERIAL UTILITIES SHOWN REFLECT THE BEST INFORMATION AVAILABLE AT THE TIME THAT PROJECT WAS DESIGNED/SURVEYED AND IS NOT GUARANTEED TO BE EXACT OR COMPLETE. THE CONTRCTOR IS RESPONSIBLE FOR DETERMINING THE EXACT TYPE, LOCATION, AND DEPTH OF ALL UTILITIES AFFECTED BY CONSTRUCTION FOR THIS PROJECT IN ORDER TO AVOID DAMAGING THOSE UTILITIES.
6. CONTRACTOR SHALL FURNISH AND INSTALL ALL PAVEMENT MARKINGS FOR FIRE LANES, PARKING STALLS, HANDICAPPED PARKING SYMBOLS, AND MISCELLANEOUS STRIPING WITHIN PARKING LOT AND AROUND BUILDING AS SHOWN ON THE PLANS.
7. CONTRACTOR TO REFERENCE IRRIGATION PLAN AND MEP PLANS FOR LOCATION OF PROPOSED SLEEVING AND CONDUITS.
8. REFER TO PROJECT EARTHWORK SPECIFICATION AND GEOTECHNICAL REPORT FOR PREPARATION OF BUILDING AND PAVING SUBGRADES.
9. ALL DISTURBED GRASS AND NON-PAVED AREAS NOT INDICATED FOR IMPROVEMENTS BY LANDSCAPING PLANS ARE TO BE STABILIZED AND RESTORED WITH 4" MINIMUM TOPSOIL AND SODDING AS INDICATED TO MATCH FINISH GRADES PER GRADING PLAN.
10. ALL STRIPING SHALL BE EXTRUDED THERMOPLASTIC MARKING MATERIAL.
11. FIRE APPARATUS ACCESS ROADS SHALL BE MARKED BY PAINTED LINES OF RED TRAFFIC PAINT 6 IN. WIDTH TO SHOW THE BOUNDARIES OF THE LANE. THE WORDS "NO PARKING FIRE LANE" OR "FIRE LANE NO PARKING" SHALL APPEAR IN 4 IN. WHITE LETTERS AT 25 FT. INTERVALS ON THE RED BORDER MARKINGS ALONG BOTH SIDES OF THE FIRE LANES. WHERE A CURB IS AVAILABLE, THE STRIPING SHALL BE ON BOTH THE VERTICAL AND HORIZONTAL FACES OF THE CURB.
12. CONTRACTOR SHALL VERIFY BENCHMARKS AND DATUM PRIOR TO COMMENCING CONSTRUCTION OR STAKING OF IMPROVEMENTS.

Texas Department of Transportation
COPYRIGHT © 2021

LTRA
3320 Belt Line Rd
Farmers Branch, Texas 75234
LINA T. RAMEY & ASSOCIATES, INC.
Firm Registration No. F-782

STATE OF TEXAS
VINCENT V. MAZIDI
113088
LICENSED
PROFESSIONAL ENGINEER
4/21/2021

DISTRICT (18)
COLLIN COUNTY
McKinney Area Engineering and Maintenance Facility
2205 TX-5, McKinney, TX 75069
PROJECT NO. 18-470420012

ISSUED: 2021.04.21
DRAWN BY: VM
REVISIONS:

DEMOLITION PLAN
C1.1

THIS DRAWING CREATED FOR PRODUCTION ON 22"x34" SHEET SIZE. DO NOT SCALE PRINTS.

GENERATED ON:

2 KEY NOTES

- (A) 4" THICK CONCRETE SIDEWALK (6' WIDE TYP.)
- (B) WHEEL CHAIR CURB RAMP
- (C) PEDESTRIAN CROSSWALK - 6" WIDE PAINTED WHITE STRIPING PARALLEL TO DIRECTION OF TRAFFIC AT 2' O.C. AND (1) 8" WIDE PAINTED WHITE STRIPE PREPENDICULAR ON BOTH ENDS
- (D) ACCESSIBLE PARKING SPACE WITH SIGN, STRIPING, SYMBOL, AND WHEELSTOP **
- (E) TRAFFIC LANE STRIPING - 4" WIDE SOLID WHITE STRIPE
- (F) EDGE OF PAVEMENT CONDITION (F1-6" CURB & GUTTER, F2-NO CURB)
- (G) 6" WIDE FIRE LANE STRIPING (IN ACCORDANCE WITH CITY OF MCKINNEY STANDARDS)
- (H) ASPHALT SAWCUT LINE, MATCH EXIST PVMT ELEVATION & CROSS SLOPE
- (I) ELECTRIC SLIDE GATE W/ REMOTE CONTROLS, 24' CLEAR OPENING (REFER TO PROJECT SPECIFICATION)
- (J) OMIT 2 LF CURB FOR DRAINAGE, GRADE FOR POSITIVE DRAINAGE TO DITCH ALONG SH-5
- (K) 8' FENCE (REFER TO PROJECT SPECIFICATION), INSTALL 3' CONC. MOWSTRIP AT GRADE LINE
- (L) IRRIGATION SLEEVE (SEE LANDSCAPE PLAN FOR SIZE & QTY)
- (M) FLATTEN CURB, SEE LANDSCAPE PLANS FOR DETAILS

** THE BOTTOM OF THE ACCESSIBLE PARKING SIGN R7-8 SHALL BE 60" MIN ABOVE PARKING SURFACE AND MUST BE SUPPLEMENTED WITH A SIGN IDENTIFYING THE FINE FOR ILLEGALLY PARKING IN THE RESERVED SPACE(S) A MUNICIPALITY MAY IMPOSE. CONFIRM WITH LOCAL REGULATIONS.
THIS SIGN SHALL BE PLACED NO MORE THAN 8" BELOW THE ACCESSIBLE PARKING SIGN AND THE BOTTOM OF THE SIGN TO BE LOCATED 48" MIN TO 80" MAX FROM PARKING SURFACE.

THE WORDS "NO PARKING" MUST BE PAINTED ON ANY ACCESS AISLE ADJACENT TO THE PARKING SPACE.

ACCESSIBLE PARKING SIGN MUST INCLUDE "VAN ACCESSIBLE" LETTERING OR SUPPLEMENTED WITH A "VAN ACCESSIBLE" SIGN WHEN APPLICABLE

* EXTEND EDGE OF BASE & SUBGRADE SECTION A MINIMUM OF 12" BEHIND CURB OR EDGE OF PAVEMENT.

	VISITOR PARKING AREA	EMPLOYEE PARKING AREA
1	2" HMAC SURFACE (TYPE D) PER TXDOT SS2014 ITEM 341	3" HMAC SURFACE (TYPE D) PER TXDOT SS2014 ITEM 341
2	9" CRUSHED STONE BASE PER TXDOT SS2014 ITEM 247 TYPE A, GRADE 1 OR 2	9" CRUSHED STONE BASE PER TXDOT SS2014 ITEM 247 TYPE A, GRADE 1 OR 2
3	6" LIME STAB. SUBGRADE (6%) PER TXDOT SS2014 ITEM 260	6" LIME STAB. SUBGRADE (6%) PER TXDOT SS2014 ITEM 260

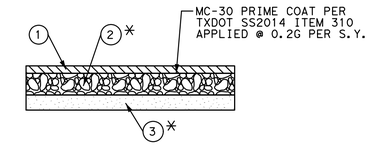

PROPOSED PAVEMENT SECTION

SHADED PAVEMENT INDICATES ASPHALT PORTION OF PAVEMENT CONSTRUCTED BY TXDOT. GENERAL CONTRACTOR IS RESPONSIBLE FOR ALL OTHER ITEMS INCLUDING GRADING, SUBGRADE AND BASE, CURB & GUTTER, INLETS, AND ETC.

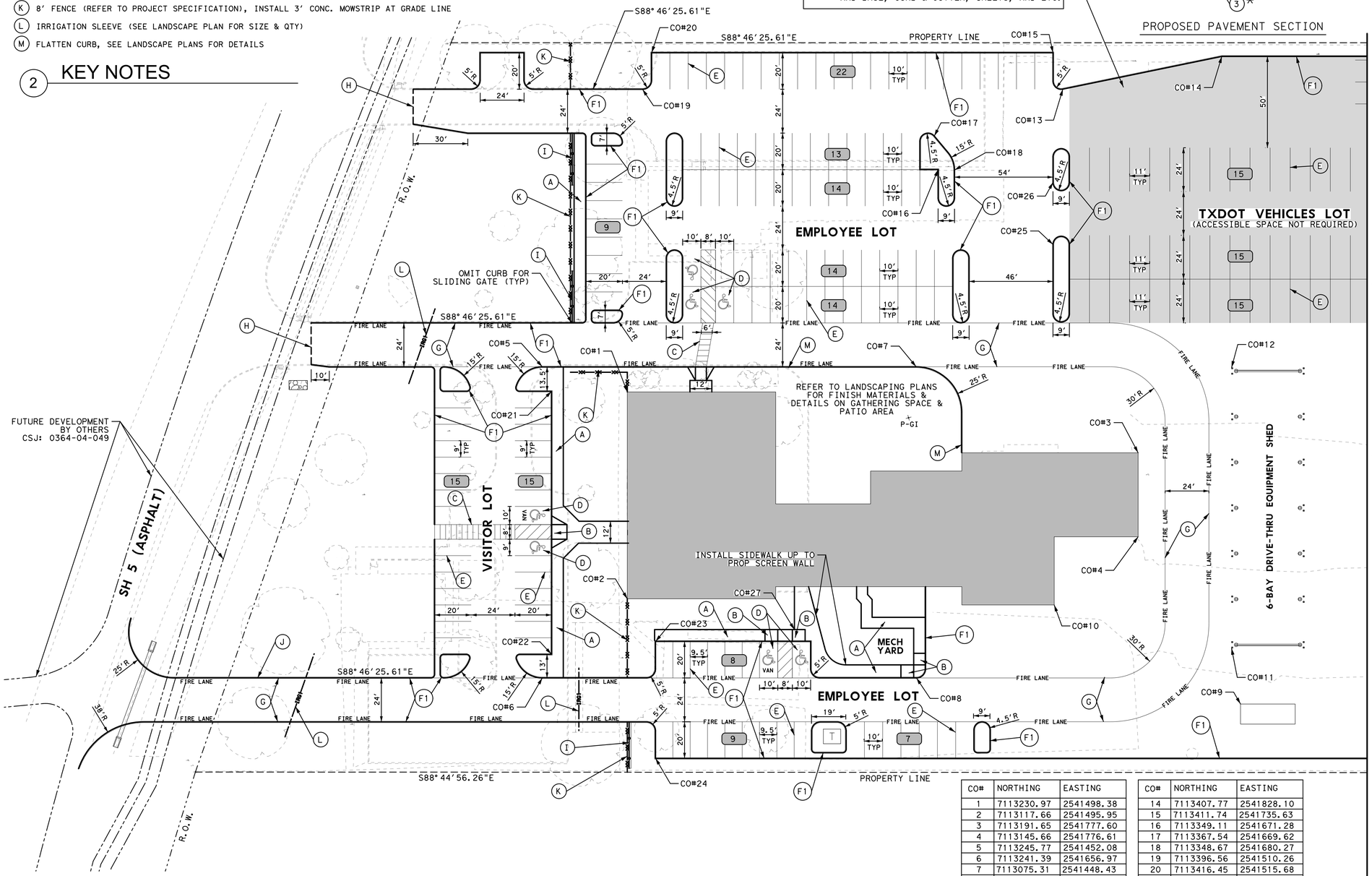

1 SITE PAVING PLAN

CO#	NORTHING	EASTING
1	7113230.97	2541498.38
2	7113117.66	2541495.95
3	7113191.65	2541777.60
4	7113145.66	2541776.61
5	7113245.77	2541452.08
6	7113241.39	2541656.97
7	7113075.31	2541448.43
8	7113070.93	2541653.45
9	7113052.83	2541830.74
10	7113109.32	2541729.83
11	7113083.53	2541826.50
12	7113237.22	2541829.78
13	7113391.73	2541740.61

CO#	NORTHING	EASTING
14	7113407.77	2541828.10
15	7113411.74	2541735.63
16	7113349.11	2541671.28
17	7113367.54	2541669.62
18	7113348.67	2541680.27
19	7113396.56	2541510.26
20	7113416.45	2541515.68
21	7113232.17	2541456.79
22	7113088.20	2541453.71
23	7113093.98	2541510.91
24	7113030.00	2541509.54
25	7113306.77	2541733.39
26	7113340.76	2541734.11
27	7113098.85	2541587.14

N

0 10' 20' 30' 60'
1"=30'

NOTES:

1. CONTRACTOR SHALL REFER TO THE ARCHITECTURAL PLANS FOR PRECISE BUILDING DIMENSIONS, EXACT BUILDING UTILITY ENTRANCE LOCATIONS, TOTAL NUMBER, LOCATION, AND SIZE OF DOWNSPOUTS AND ANY OTHER APPURTENANCES WHICH ARE CONNECTED TO THE BUILDING.
2. ALL DIMENSIONS AND RADII ARE TO THE NOMINAL FACE OF CURB (6" FROM BOC), CENTER OR END OF STRIPE, FACE OF BUILDING, OR EDGE OF PAVEMENT, UNLESS OTHERWISE NOTED.
3. PROPOSED CONSTRUCTION ON THIS SITE SHALL COMPLY WITH THE LATEST REVISION OF THE ADA REGULATIONS AND TEXAS ACCESSIBILITY STANDARDS (TAS).
4. EROSION AND SEDIMENTATION CONTROL DURING CONSTRUCTION SHALL BE IN COMPLIANCE WITH LOCAL AND STATE REQUIREMENTS.
5. CONTRACTOR SHALL BE RESPONSIBLE FOR MAINTAINING PROPER DRAINAGE THROUGHOUT THE SITE DURING CONSTRUCTION, CARE SHALL BE TAKEN TO PREVENT ANY NEGATIVE IMPACTS TO ADJACENT PROPERTIES.
6. REFER TO ARCHITECTURAL AND LANDSCAPING PLANS FOR SPECIAL PAVING FINISH MATERIALS AND DETAILS.
7. SURFACE OF CURB RAMPS SHALL BE CONSTRUCTED WITH ADA COMPLIANT SURFACE TEXTURE AND CONTRASTING COLOR.

LEGEND:

- 3" THICK ASPHALT PROVIDED AND INSTALLED BY TXDOT
- BUILDING
- XX — NUMBER OF PARKING SPACES PER ROW
- CO# — COORDINATE

PARKING INFORMATION:

	VISITOR LOT	EMPLOYEE LOT	TXDOT VEHICLES LOT
PARKING SPACES	28	105	105
ACCESSIBLE SPACES	2	5	N/A
TOTAL PARKING PROVIDED	30	110	105

SUE SURVEY LEGEND:

LINE TYPE	UTILITY TYPE
OE1	OVERHEAD ELECTRIC
E1	ELECTRIC
E1 (D) E1 (D)	ELECTRIC
FOC1	AT&T FIBER OPTIC
FOC1 (D) FOC1 (D)	AT&T FIBER OPTIC
T1	AT&T TELEPHONE
T1 (D) T1 (D)	AT&T TELEPHONE
IRG1 (D) IRG1 (D)	IRRIGATION
WW1 (D) WW1 (D)	WASTEWATER
SD1	STORM SEWER
G1 (D) G1 (D)	GAS
UNK	UNKNOWN
UNK (D)	UNKNOWN

SYMBOLS

- EM — ELECTRIC METER
- EH — ELECTRIC HANDHOLE
- POWER POLE
- LIGHT POLE
- TELEPHONE PEDESTAL
- HH — TELEPHONE HAND HOLE
- WM — WATER METER
- CO — CLEAN OUT
- SD — STORM SEWER DRAIN
- GAS RISER
- GM — GAS METER
- OUT OF SCOPE

Texas Department of Transportation
COPYRIGHT © 2021

LTRA
3320 Belt Line Rd
Farmers Branch, Texas 75234
LINA T. RAMEY & ASSOCIATES, INC.
Firm Registration No. F-782
STATE OF TEXAS VINCENT V. MAZIDI 113088 LICENSED PROFESSIONAL ENGINEER
4/21/2021

DISTRICT (18)
COLLIN COUNTY
McKinney Area Engineering and Maintenance Facility
2205 TX-5, McKinney, TX 75069
PROJECT NO. 18-470420012

ISSUED: 2021.04.21
DRAWN BY: VM
REVISIONS:

SITE PAVING PLAN
C2.1

THIS DRAWING CREATED FOR PRODUCTION ON 22"x34" SHEET SIZE. DO NOT SCALE PRINTS.

GENERATED ON:

(A) 4" THICK CONCRETE SIDEWALK (6' WIDE TYP.)

(B) WHEEL CHAIR CURB RAMP

(C) PEDESTRIAN CROSSWALK - 6" WIDE PAINTED WHITE STRIPING

(D) ACCESSIBLE PARKING SPACE WITH SIGN, STRIPING, SYMBOL, AND WHEELSTOP

(E) TRAFFIC LANE STRIPING - 4" WIDE SOLID WHITE STRIPE

(F) EDGE OF PAVEMENT CONDITION (F1-6" CURB & GUTTER, F2-NO CURB)

(2) KEY NOTES

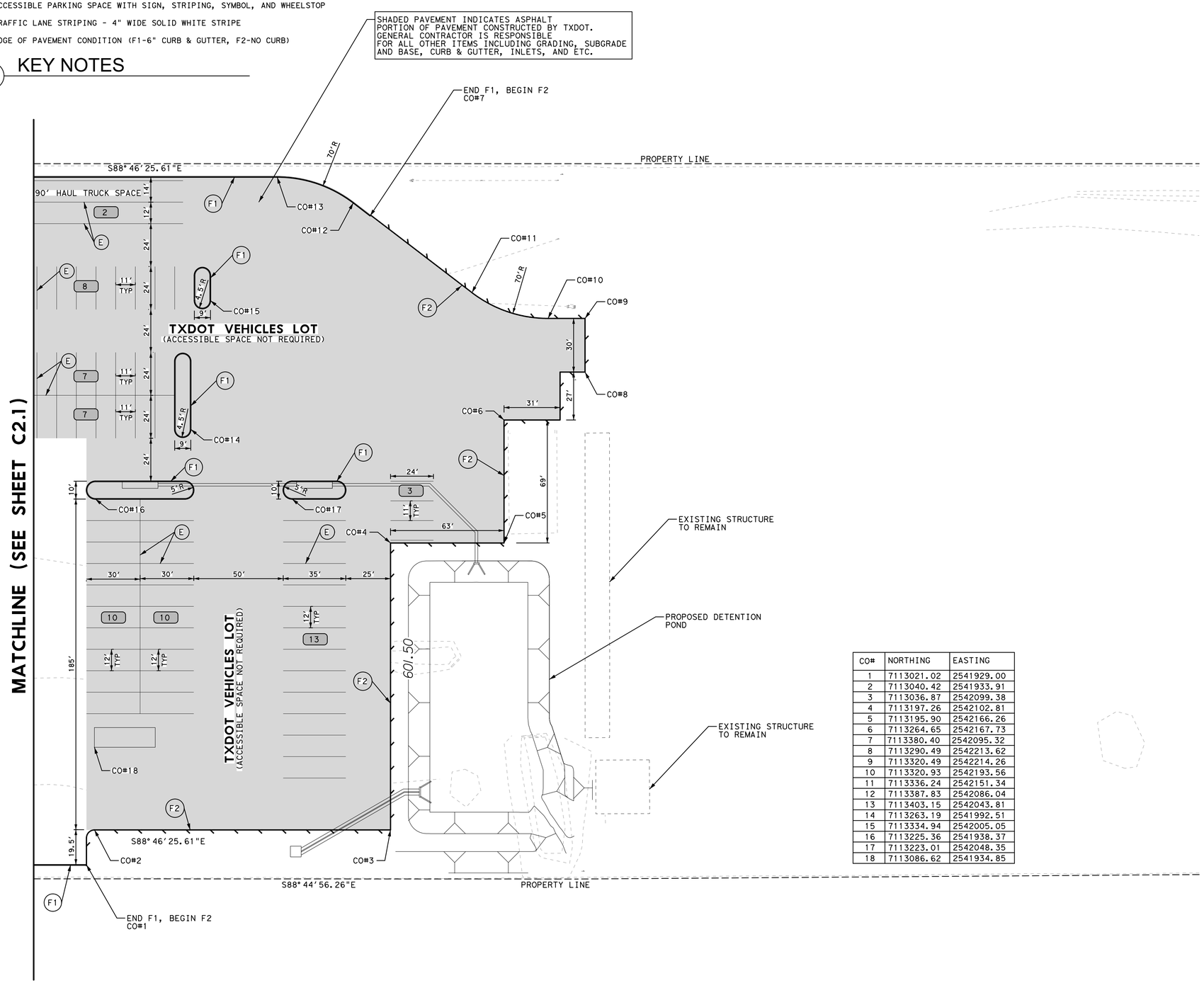

CO#	NORTHING	EASTING
1	7113021.02	2541929.00
2	7113040.42	2541933.91
3	7113036.87	2542099.38
4	7113197.26	2542102.81
5	7113195.90	2542166.26
6	7113264.65	2542167.73
7	7113380.40	2542095.32
8	7113290.49	2542213.62
9	7113320.49	2542214.26
10	7113320.93	2542193.56
11	7113336.24	2542151.34
12	7113387.83	2542086.04
13	7113403.15	2542043.81
14	7113263.19	2541992.51
15	7113334.94	2542005.05
16	7113225.36	2541938.37
17	7113223.01	2542048.35
18	7113086.62	2541934.85

(1) SITE PAVING PLAN - CONT.

N

0 10' 20' 30' 60'

1"=30'

NOTES:

1. CONTRACTOR SHALL REFER TO THE ARCHITECTURAL PLANS FOR PRECISE BUILDING DIMENSIONS, EXACT BUILDING UTILITY ENTRANCE LOCATIONS, TOTAL NUMBER, LOCATION, AND SIZE OF DOWNSPOUTS AND ANY OTHER APPURTENANCES WHICH ARE CONNECTED TO THE BUILDING.
2. ALL DIMENSIONS AND RADII ARE TO THE NOMINAL FACE OF CURB (6" FROM BOC), CENTER OR END OF STRIPE, FACE OF BUILDING, OR EDGE OF PAVEMENT, UNLESS OTHERWISE NOTED.
3. PROPOSED CONSTRUCTION ON THIS SITE SHALL COMPLY WITH THE LATEST REVISION OF THE ADA REGULATIONS AND TEXAS ACCESSIBILITY STANDARDS (TAS).
4. EROSION AND SEDIMENTATION CONTROL DURING CONSTRUCTION SHALL BE IN COMPLIANCE WITH LOCAL AND STATE REQUIREMENTS.
5. CONTRACTOR SHALL BE RESPONSIBLE FOR MAINTAINING PROPER DRAINAGE THROUGHOUT THE SITE DURING CONSTRUCTION, CARE SHALL BE TAKEN TO PREVENT ANY NEGATIVE IMPACTS TO ADJACENT PROPERTIES.
6. REFER TO ARCHITECTURAL AND LANDSCAPING PLANS FOR SPECIAL PAVING FINISH MATERIALS AND DETAILS.

LEGEND:

- 3" THICK ASPHALT PROVIDED AND INSTALLED BY TXDOT
- BUILDING
- XX — NUMBER OF PARKING SPACES PER ROW
- CO# — COORDINATE

PARKING INFORMATION:

	VISITOR LOT	EMPLOYEE LOT	TXDOT VEHICLES LOT
PARKING SPACES	28	105	105
ACCESSIBLE SPACES	2	5	N/A
TOTAL PARKING PROVIDED	30	110	105

SUE SURVEY LEGEND:

LINE TYPE	UTILITY TYPE
OE1	OVERHEAD ELECTRIC
E1	ELECTRIC
E1 (D) E1 (D)	ELECTRIC
FOC1	AT&T FIBER OPTIC
FOC1 (D) FOC1 (D)	AT&T FIBER OPTIC
T1	AT&T TELEPHONE
T1 (D) T1 (D)	AT&T TELEPHONE
IRG1 (D) IRG1 (D)	IRRIGATION
WW1 (D) WW1 (D)	WASTEWATER
SD1	STORM SEWER
G1 (D) G1 (D)	GAS
UNK	UNKNOWN
UNK (D)	UNKNOWN

SYMBOLS

- EM — ELECTRIC METER
- EH — ELECTRIC HANDHOLE
- POWER POLE
- LIGHT POLE
- TELEPHONE PEDESTAL
- HH — TELEPHONE HAND HOLE
- WM — WATER METER
- CO — CLEAN OUT
- SD — STORM SEWER DRAIN
- GAS RISER
- GM — GAS METER
- OUT OF SCOPE

Texas Department of Transportation

COPYRIGHT © 2021

LTRA
3320 Belt Line Rd
Farmers Branch, Texas 75234
LINA T. RAMEY & ASSOCIATES, INC.
Firm Registration No. F-782

STATE OF TEXAS
VINCENT V. MAZIDI
113088
LICENSED
PROFESSIONAL ENGINEER
4/21/2021

DISTRICT (18)
COLLIN COUNTY
McKinney Area Engineering and Maintenance Facility
2205 TX-5, McKinney, TX 75069
PROJECT NO. 18-470420012

ISSUED: 2021.04.21
DRAWN BY: VM
REVISIONS:

SITE PAVING PLAN

C2.2

THIS DRAWING CREATED FOR PRODUCTION ON 22"x34" SHEET SIZE. DO NOT SCALE PRINTS.

GENERATED ON:

POINT NO. P#	ELEV.
1	609.36
2	609.10
3	608.74
4	609.57
5	608.22
6	606.51
7	602.86
8	602.83
9	602.51
10	604.58
11	602.50
12	609.65
13	606.11
14	610.05
15	609.76
16	610.01
17	609.32
18	602.10
19	601.40
20	609.80

POINT NO. P#	ELEV.
21	610.24
22	609.16
23	605.62
24	608.63
25	608.13
26	608.14
27	607.91
28	610.09
29	612.15
30	612.34
31	611.68
32	603.21
33	602.65
34	603.96
35	609.04
36	612.49
37	609.03
38	607.67
39	610.35
40	612.64

POINT NO. P#	ELEV.
41	612.79
42	606.43
43	609.15
44	609.50
45	608.26
46	608.74
47	609.42
48	609.83
49	611.97
50	609.65
51	609.65
52	609.29
53	609.16
54	609.36
55	609.37
56	607.09
57	608.90
58	605.84
59	605.47
60	610.79

POINT NO. P#	ELEV.
61	611.48
62	605.85
63	610.22
64	609.16
65	608.31
66	607.96
67	609.43
68	611.73
69	611.19
70	609.49
71	610.64
72	609.96
73	609.32
74	609.12
75	609.33
76	609.43
77	609.28
78	609.42
79	609.65

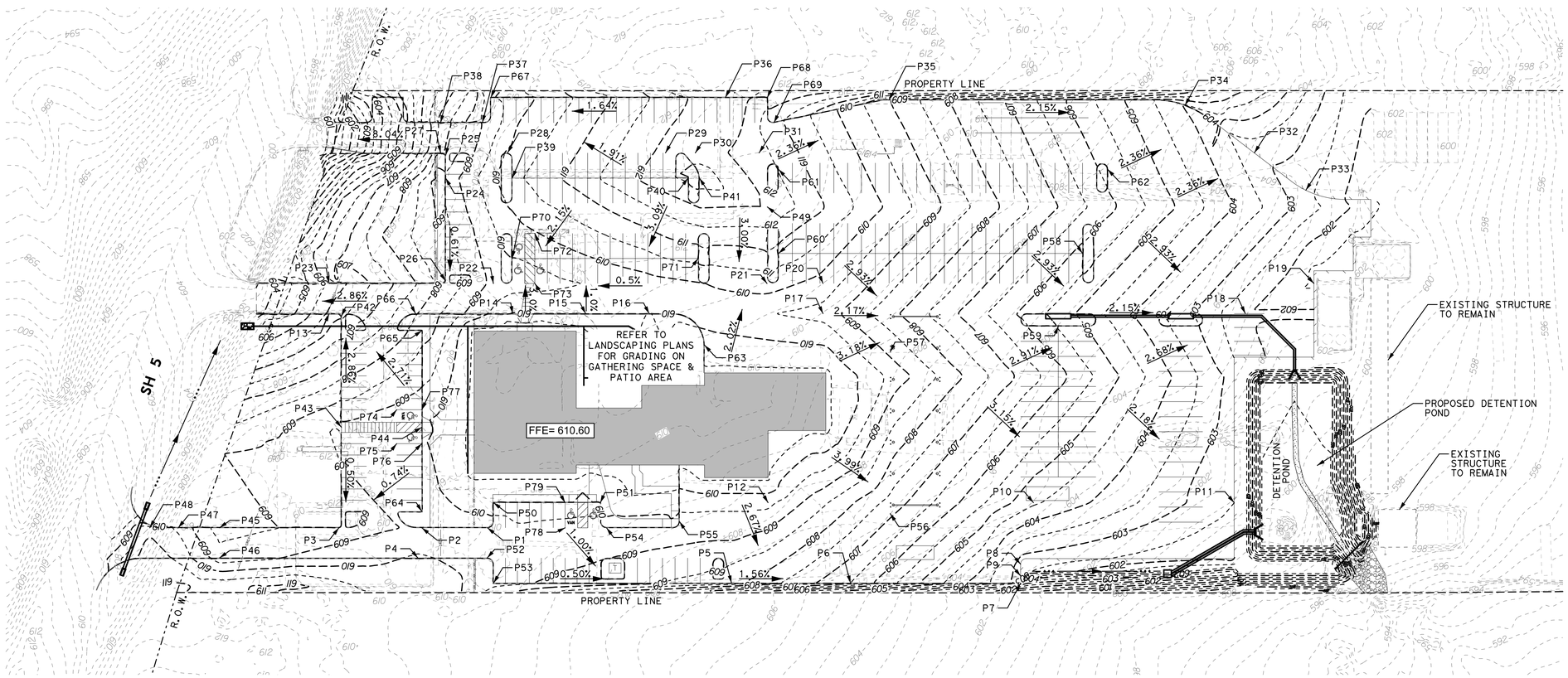

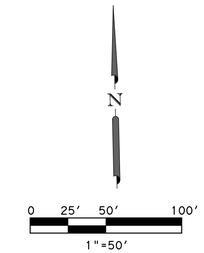

NOTES:

1. ALL SPOT ELEVATIONS SHOWN ARE TOP OF PAVEMENT OR FINISH GRADE UNLESS OTHERWISE NOTED.
2. ALL SIDEWALKS, PEDESTRIAN WALKWAYS AND ACCESSIBLE ROUTES SHALL HAVE A SLOPE OF NO MORE THAN 5% (1:20) IN THE DIRECTION OF TRAVEL OR LONGITUDINAL DIRECTION (EXCEPT RAMPS) AND 2% CROSS SLOPE IN THE TRANSVERSE DIRECTION. RAMP SLOPE SHALL NOT EXCEED 8.33% (1:12). CURB RAMPS SHALL NOT EXCEED 6' IN LENGTH.
3. ACCESSIBLE PARKING SPACE SLOPES SHALL NOT EXCEED 2.0% IN ALL DIRECTIONS.
4. ALL CUT OR FILL SLOPES SHALL BE 4:1 OR FLATTER UNLESS OTHERWISE SHOWN.
5. CONTRACTOR SHALL FIELD VERIFY HORIZONTAL AND VERTICAL LOCATION OF ALL EXISTING UTILITIES PRIOR TO CONSTRUCTION. CONTRACTOR IS RESPONSIBLE FOR PROTECTING EXISTING UTILITIES (SHOWN OR NOT SHOWN) WITHIN SCOPE OF CONSTRUCTION. IF ANY EXISTING UTILITIES ARE DAMAGED, THE CONTRACTOR SHALL REPLACE THEM AT HIS OWN EXPENSE.
6. NO ROCK SHALL BE PLACED IN TOP 6 INCHES OF THE SUBGRADE.
7. CONTRACTOR IS RESPONSIBLE FOR DISPOSAL OFF-SITE OF ALL EXCAVATED AND CLEARED MATERIAL WHICH SOILS LAB DECLARES UNSUITABLE FOR USE ON-SITE.

LEGEND:

- 602 — PROPOSED MAJOR CONTOURS
- PROPOSED MINOR CONTOURS
- 596 — EXISTING CONTOURS
- DIRECTION OF FLOW OR SLOPE

Texas Department of Transportation
COPYRIGHT © 2021

LTRA
3320 Belt Line Rd
Farmers Branch, Texas 75234
LINA T. RAMEY & ASSOCIATES, INC.
Firm Registration No. F-782

STATE OF TEXAS
VINCENT V. MAZIDI
113088
LICENSED
PROFESSIONAL ENGINEER
4/21/2021

DISTRICT (18)
COLLIN COUNTY
McKinney Area Engineering and Maintenance Facility
2205 TX-5, McKinney, TX 75069
PROJECT NO. 18-47042001 2

ISSUED: 2021.04.21
DRAWN BY: VM
REVISIONS:

SITE GRADING
C3.1

THIS DRAWING CREATED FOR PRODUCTION ON 22"x34" SHEET SIZE. DO NOT SCALE PRINTS.

1 SITE GRADING

GENERATED ON:

DRAINAGE AREA CALCULATIONS

DRAINAGE AREA ID	AREA	RUNOFF COEFFICIENT	TIME OF CONCENTRATION	RAINFALL INTENSITY				PROPOSED FLOW				NOTES
				5-YEAR	10-YEAR	25-YEAR	100-YEAR	5-YEAR	10-YEAR	25-YEAR	100-YEAR	
	(acres)	C	(min)	(in/hr)	(in/hr)	(in/hr)	(in/hr)	(cfs)	(cfs)	(cfs)	(cfs)	
A1	0.29	0.95	10	5.64	6.53	7.69	9.38	1.55	1.80	2.12	2.58	TO DS TO PVC
A2	0.11	0.95	10	5.64	6.53	7.69	9.38	0.59	0.68	0.80	0.98	TO AREA DRAIN TO PVC
A3	3.00	0.85	10	5.64	6.53	7.69	9.38	14.38	16.65	19.61	23.92	SHEET FLOW TO EXIST DITCH
B1	1.06	0.95	10	5.64	6.53	7.69	9.38	5.68	6.58	7.74	9.45	TO PROP CULVERT-A CURB INLETS
B2	1.16	0.95	10	5.64	6.53	7.69	9.38	6.22	7.20	8.47	10.34	TO PROP DENTENTION POND
C1	2.04	0.95	10	5.64	6.53	7.69	9.38	10.93	12.66	14.90	18.18	TO CULVERT-B PAZD INLET
D1	7.15	0.85	10	5.64	6.53	7.69	9.38	34.28	39.69	46.74	57.01	TO EXIST DITCH
D2	1.55	0.85	10	5.64	6.53	7.69	9.38	7.43	8.60	10.13	12.36	TO EXIST DITCH
E1	0.89	0.61	10	5.64	6.53	7.69	9.38	3.06	3.55	4.18	5.09	TO PROP CULVERT-C

NOTES:

1. TXDOT HYDRAULIC DESIGN MANUAL 2009-1, SEPTEMBER 12, 2019.
2. RUNOFF COEFFICIENTS (TxDOT):
   COMMERCIAL: 0.85
   ASPHALT, AND ROOF: 0.95
   GRASS: 0.40

PIPE AND INLET CALCULATIONS

INLET CALCULATIONS

INLET ID	INLET TYPE	GRATE PERIMITER	GRATE AREA	LONGITUDINAL SLOPE	CROSS SLOPE	DESIGN FREQUENCY	DISCHARGE	BYPASS FLOW	BYPASS TO	CURB LENGTH	ALLOWABLE PONDED WIDTH	PONDED WIDTH	PONDED DEPTH	NO. GRATES	REMARKS
		(FT)	(SQ FT)	(FT/FT)	(FT/FT)	(YR)	(CFS)	(CFS)		(FT)	(FT)	(FT)	(IN)	(EA)	
INLET_A1	INLET (COMPL)(PCO)(3FT)(BOTH)	N/A	N/A	0.021	0.02	10	4.01	0.18	INLET_A2	16	N/A	10.42	2.50	N/A	DA B1 (PARTIAL)
INLET_A2	INLET (COMPL)(PCO)(3FT)(BOTH)	N/A	N/A	0.021	0.02	10	2.57	0.00	N/A	16	N/A	8.70	2.09	N/A	DA B1 (PARTIAL)
INLET_B	INLET (COMPL)(PAZD)(SL)(5FTX5FT)	16.00	14.40	0.023	N/A	10	12.66	0.00	N/A	N/A	10.00	7.01	6.92	1	DA C1 SAG INLET

PIPE CALCULATIONS

PIPE ID	FROM	TO	DESIGN FREQUENCY	FLOW	CAPACITY	LENGTH	SIZE	US FL	DS FL	MANNING'S N	PIPE SLOPE	FRICTION SLOPE	CRITICAL DEPTH	NORMAL DEPTH	DS DEPTH	HGL US	HGL DS	VELOCITY
			(YR)	(CFS)	(CFS)	(FT)	(IN)	(FT)	(FT)		%	%	(FT)	(FT)	(FT)	(FT)	(FT)	(FT/S)
LINE_A1	INLET_A1	INLET_A2	10	4.01	17.44	97.48	18	601.79	599.50	0.012	2.35	2.09	0.77	0.49	1.21	602.56	600.71	8.02
LINE_A2	INLET_A2	DETENTION POND	10	6.58	10.44	118.71	18	599.50	598.50	0.012	0.84	0.81	0.99	0.86	0.86	600.49	599.36	6.25
LINE_B	INLET_B1	DETENTION POND	10	12.66	16.15	77.46	2-18	598.00	597.61	0.012	0.50	0.51	0.97	1.00	0.97	599	598.58	5.06

CULVERT CALCULATIONS

CULVERT INPUT DATA (HY-8, v7.5)

NAME	DESCRIPTION	DRAINAGE AREA ID	INLET STATION (FT)	INLET ELEV (FT)	OUTLET STATION (FT)	OUTLET ELEV (FT)	TAILWATER DATA
CULVERT C	(PROP) 24" x 50' RCP	E1	0	605.71	50	605.05	TRAP CH, BOT WIDTH=1, SS=3, CH S=0.002 FT/FT, "n"=0.030, CH INVERT EL=605.05

CULVERT HYDRAULIC DATA

NAME	DESCRIPTION	DRAINAGE AREA ID	ALLOWABLE HEADWATER (FT)	10 YEAR (DESIGN)							25 YEAR (CHECK)							COMMENTS
				FLOW "Q" (CFS)	HW ELEV (FT)	HW DEPTH (FT)	TW ELEV (FT)	TW DEPTH (FT)	OUTLET VEL (FT/S)	TW VEL (FT/S)	FLOW "Q" (CFS)	HW ELEV (FT)	HW DEPTH (FT)	TW ELEV (FT)	TW DEPTH (FT)	OUTLET VEL (FT/S)	TW VEL (FT/S)	
CULVERT C	(PROP) 24" x 50' RCP	DA 1	E1	3.55	606.61	0.90	605.85	0.80	5.79	1.30	4.18	606.69	0.98	605.91	0.86	6.04	1.36	

1 DRAINAGE CALCULATIONS

Texas Department of Transportation
COPYRIGHT © 2021

LTRA
3320 Belt Line Rd
Farmers Branch, Texas 75234
LINA T. RAMEY & ASSOCIATES, INC.
Firm Registration No. F-782

STATE OF TEXAS
EVELYN M. LEE
110063
LICENSED
PROFESSIONAL ENGINEER
4/21/2021

DISTRICT (18)
COLLIN COUNTY
McKinney Area Engineering and Maintenance Facility
2205 TX-5, McKinney, TX 75069
PROJECT NO. 18-470420012

ISSUED: 2021.04.21
DRAWN BY: EL
REVISIONS:
DATE INITIALS

DRAINAGE CALCULATIONS
C4.1

THIS DRAWING CREATED FOR PRODUCTION ON 22"x34" SHEET SIZE. DO NOT SCALE PRINTS.

GENERATED ON:

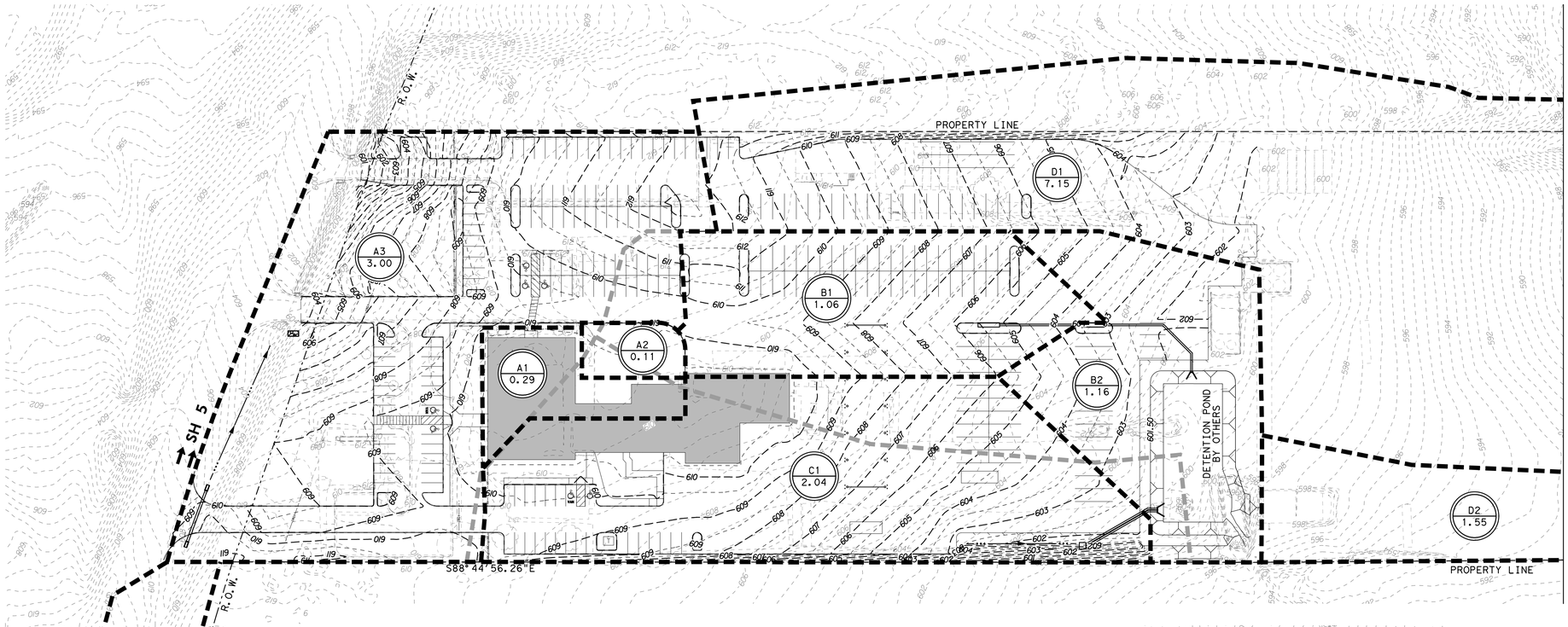

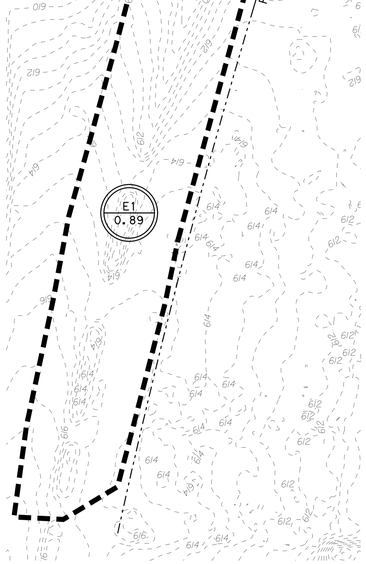

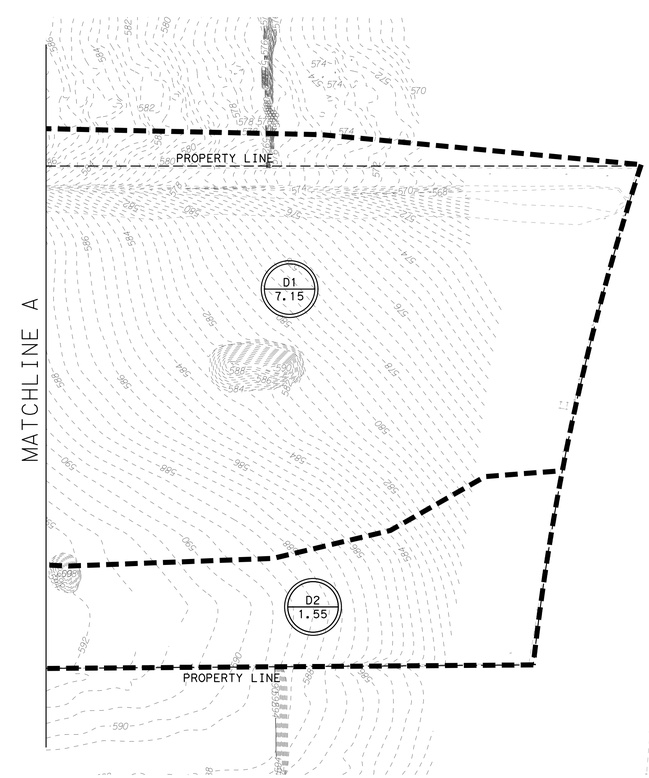

1 DRAINAGE AREA MAP

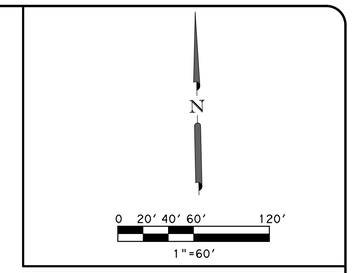

LEGEND:

- X / YY.Y — DRAINAGE AREA DESIGNATION / DRAINAGE AREA ACREAGE
- DRAINAGE DIVIDE PROPOSED
- DRAINAGE DIVIDE EXISTING

Texas Department of Transportation

COPYRIGHT © 2021

LTRA
3320 Belt Line Rd
Farmers Branch, Texas 75234
LINA T. RAMEY & ASSOCIATES, INC.
Firm Registration No. F-782

STATE OF TEXAS
EVELYN M. LEE
110063
LICENSED
PROFESSIONAL ENGINEER
4/21/2021

DISTRICT (18)
COLLIN COUNTY
McKinney Area Engineering and Maintenance Facility
2205 TX-5, McKinney, TX 75069
PROJECT NO. 18-470420012

ISSUED: 2021.04.21
DRAWN BY: EL
REVISIONS:

#	DATE	INITIALS

DRAINAGE AREA MAP

C4.2

THIS DRAWING CREATED FOR PRODUCTION ON 22"x34" SHEET SIZE. DO NOT SCALE PRINTS.

GENERATED ON:

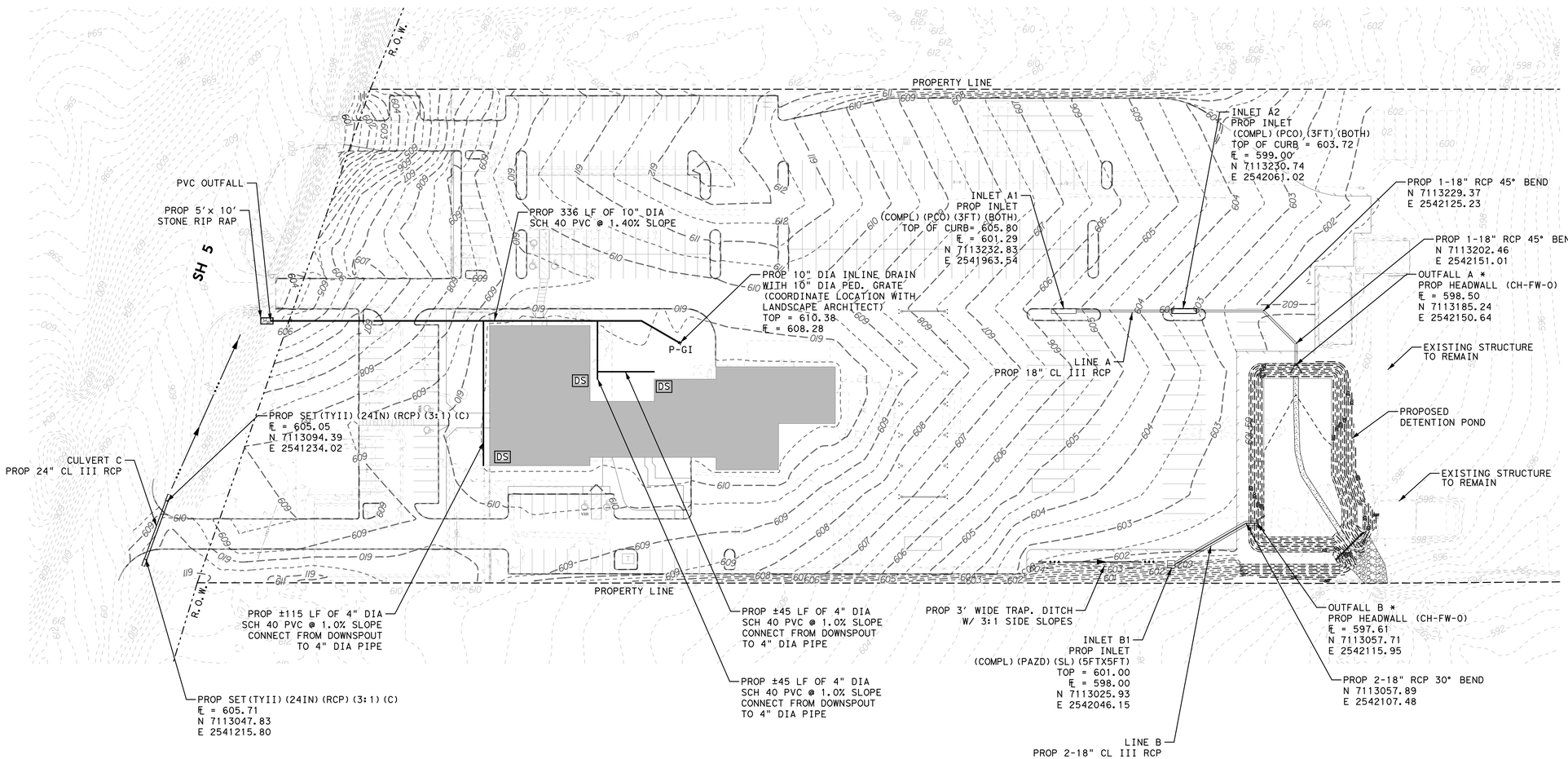

REFER TO ARCHITECTURAL PLANS FOR DOWNSPOT ADJUSTMENTS.

1 STORM SEWER

N

0 25' 50' 100'
1"=50'

LEGEND:

PROPOSED STORM SEWER

DS DOWNSPOUT CONNECTION

Texas Department of Transportation

COPYRIGHT © 2021

LTRA
3320 Belt Line Rd
Farmers Branch, Texas 75234
LINA T. RAMEY & ASSOCIATES, INC.
Firm Registration No. F-782

STATE OF TEXAS
EVELYN M. LEE
110063
LICENSED
PROFESSIONAL ENGINEER
4/21/2021

DISTRICT (18)
COLLIN COUNTY

McKinney Area Engineering and Maintenance Facility

2205 TX-5, McKinney, TX 75069

PROJECT NO. 18-470420012

ISSUED: 2021.04.21

DRAWN BY: EL

REVISIONS:

#	DATE	INITIALS

STORM SEWER

C4.3

THIS DRAWING CREATED FOR PRODUCTION ON 22"x34" SHEET SIZE. DO NOT SCALE PRINTS.

GENERATED ON:

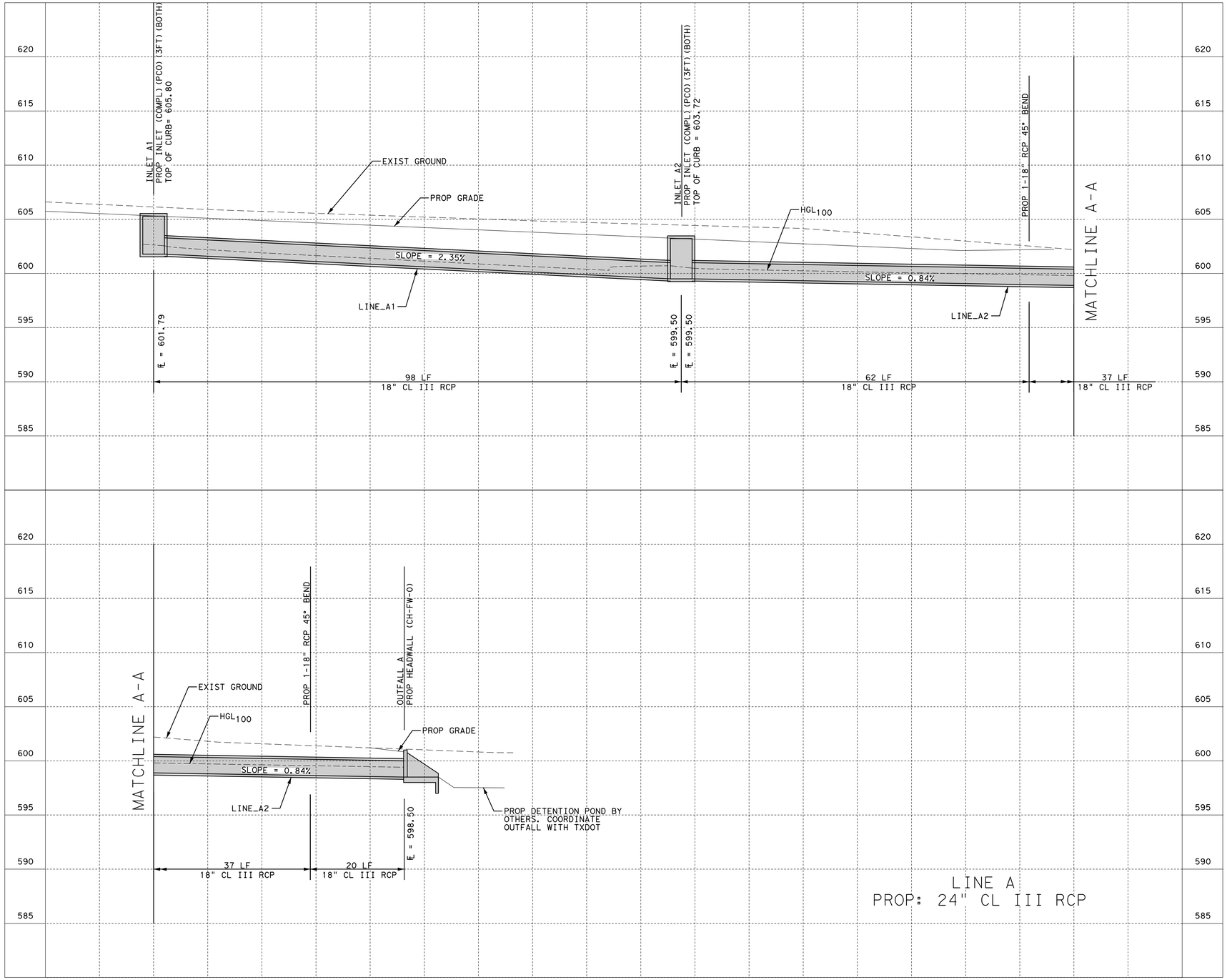

1 STORM SEWER PROFILES

HORIZ: 0 10′ 20′
1"=10′

VERT: 0 5′ 10′
1"=5′

Texas Department of Transportation

COPYRIGHT © 2021

LTRA
3320 Belt Line Rd
Farmers Branch, Texas 75234
LINA T. RAMEY & ASSOCIATES, INC.
Firm Registration No. F-782

STATE OF TEXAS
EVELYN M. LEE
110063
LICENSED
PROFESSIONAL ENGINEER
4/21/2021

DISTRICT (18)
COLLIN COUNTY
McKinney Area Engineering and Maintenance Facility
2205 TX-5, McKinney, TX 75069
PROJECT NO. 18-470420012

ISSUED: 2021.04.21
DRAWN BY: EL
REVISIONS:

#	DATE	INITIALS

STORM SEWER PROFILES

C4.4

THIS DRAWING CREATED FOR PRODUCTION ON 22"x34" SHEET SIZE DO NOT SCALE PRINTS.

GENERATED ON:

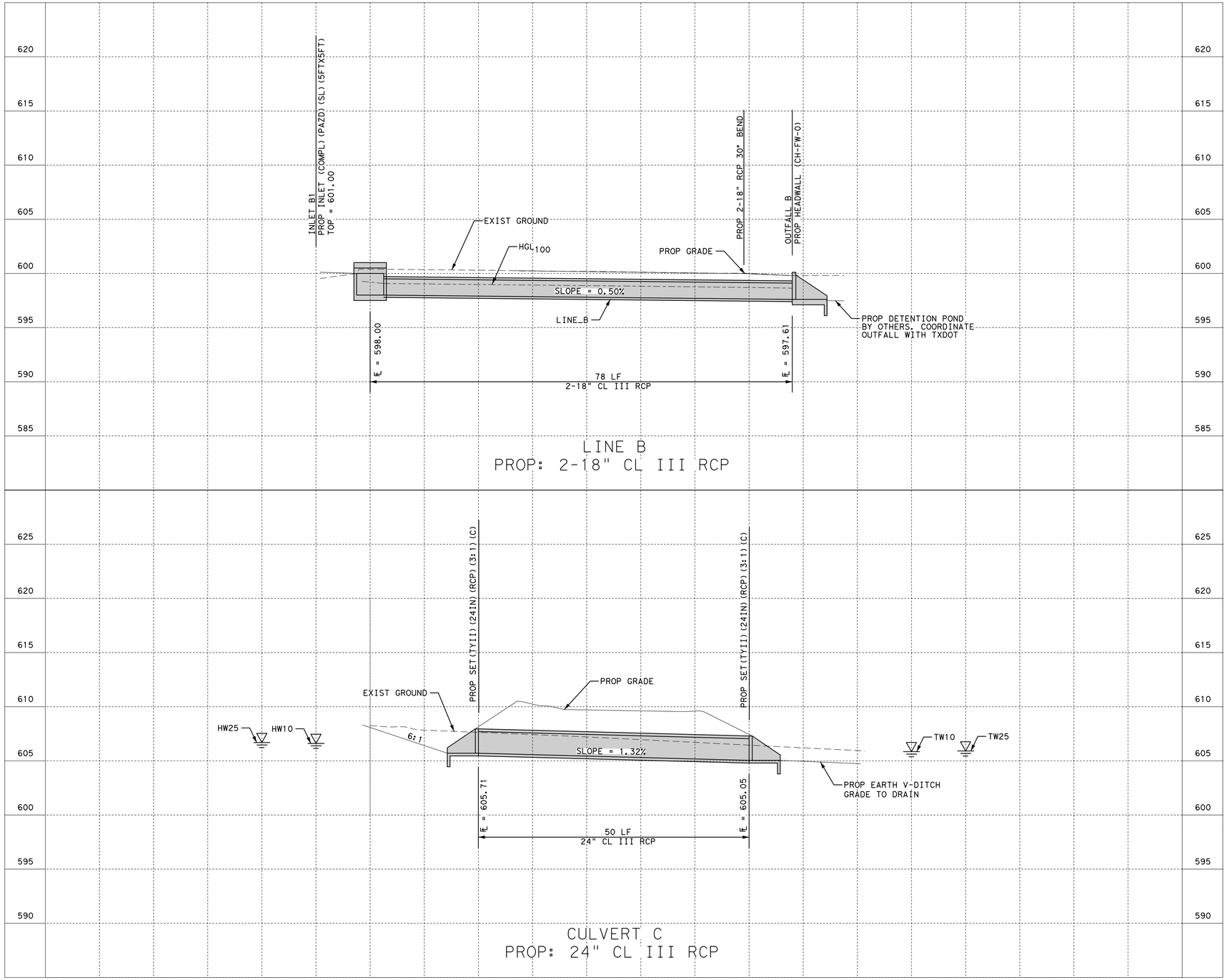

1 STORM SEWER PROFILES

HORIZ: 0 10′ 20′ 1"=10′

VERT: 0 5′ 10′ 1"=5′

Texas Department of Transportation

COPYRIGHT © 2021

LTRA
3320 Belt Line Rd
Farmers Branch, Texas 75234
LINA T. RAMEY & ASSOCIATES, INC.
Firm Registration No. F-782

STATE OF TEXAS
EVELYN M. LEE
110063
LICENSED
PROFESSIONAL ENGINEER
4/21/2021

DISTRICT (18)
COLLIN COUNTY
McKinney Area Engineering and Maintenance Facility
2205 TX-5, McKinney, TX 75069
PROJECT NO. 18-470420012

ISSUED: 2021.04.21
DRAWN BY: EL
REVISIONS:

#	DATE	INITIALS

STORM SEWER PROFILES

C4.5

THIS DRAWING CREATED FOR PRODUCTION ON 22"x34" SHEET SIZE. DO NOT SCALE PRINTS.

GENERATED ON:

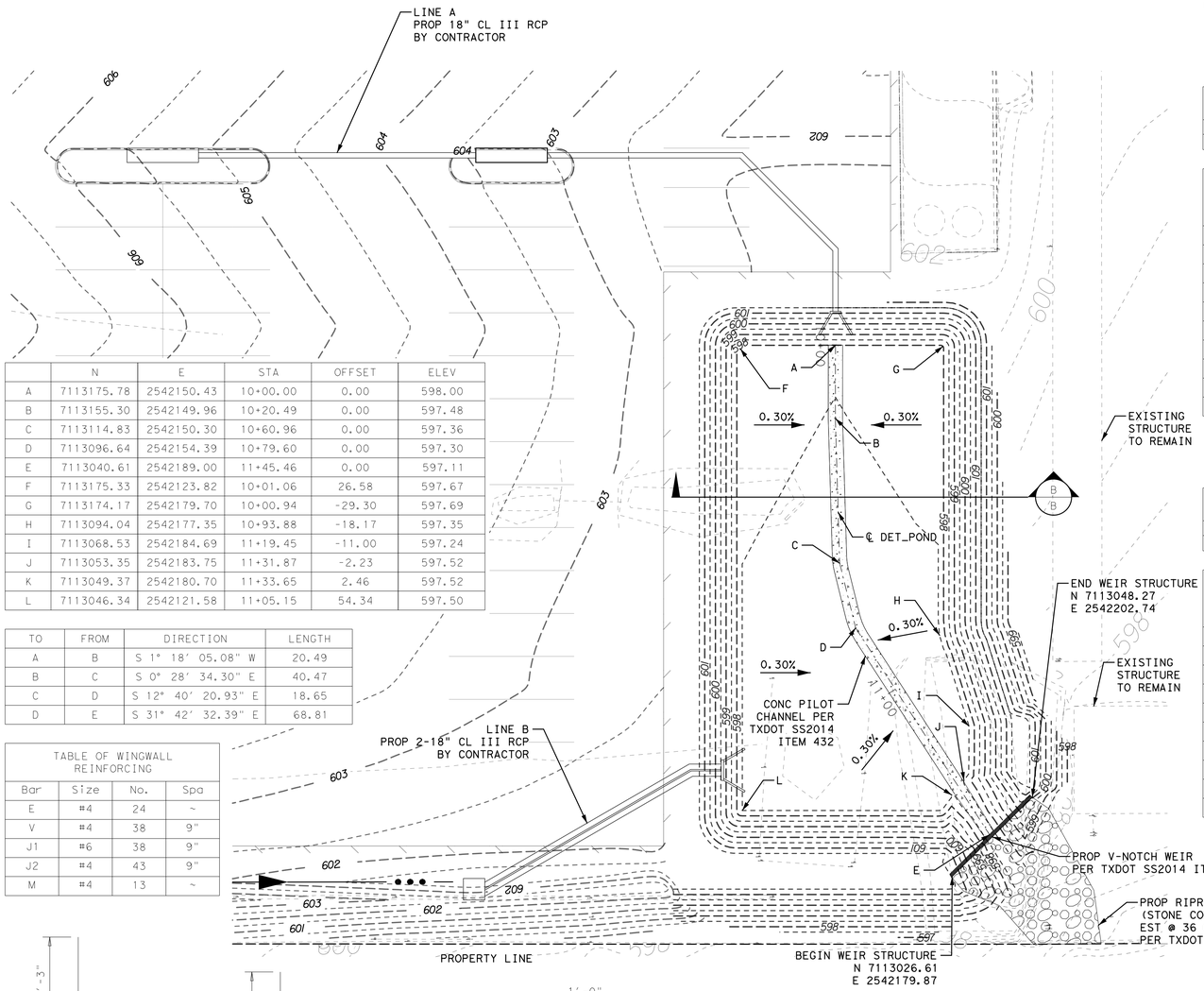

	N	E	STA	OFFSET	ELEV
A	7113175.78	2542150.43	10+00.00	0.00	598.00
B	7113155.30	2542149.96	10+20.49	0.00	597.48
C	7113114.83	2542150.30	10+60.96	0.00	597.36
D	7113096.64	2542154.39	10+79.60	0.00	597.30
E	7113040.61	2542189.00	11+45.46	0.00	597.11
F	7113175.33	2542123.82	10+01.06	26.58	597.67
G	7113174.17	2542179.70	10+00.94	-29.30	597.69
H	7113094.04	2542177.35	10+93.88	-18.17	597.35
I	7113068.53	2542184.69	11+19.45	-11.00	597.24
J	7113053.35	2542183.75	11+31.87	-2.23	597.52
K	7113049.37	2542180.70	11+33.65	2.46	597.52
L	7113046.34	2542121.58	11+05.15	54.34	597.50

TO	FROM	DIRECTION	LENGTH
A	B	S 1° 18′ 05.08" W	20.49
B	C	S 0° 28′ 34.30" E	40.47
C	D	S 12° 40′ 20.93" E	18.65
D	E	S 31° 42′ 32.39" E	68.81

TABLE OF WINGWALL REINFORCING			
Bar	Size	No.	Spa
E	#4	24	~
V	#4	38	9"
J1	#6	38	9"
J2	#4	43	9"
M	#4	13	~

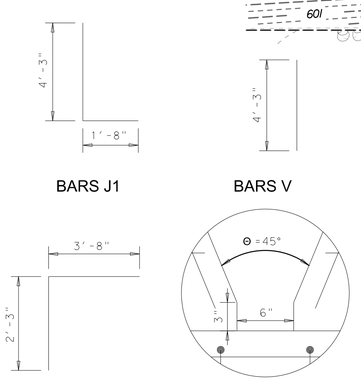

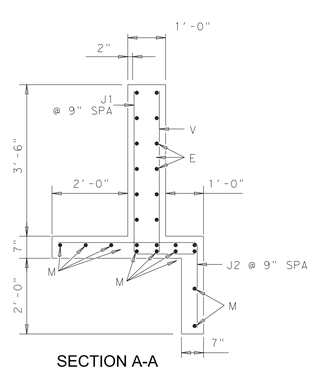

SECTION A-A
NTS

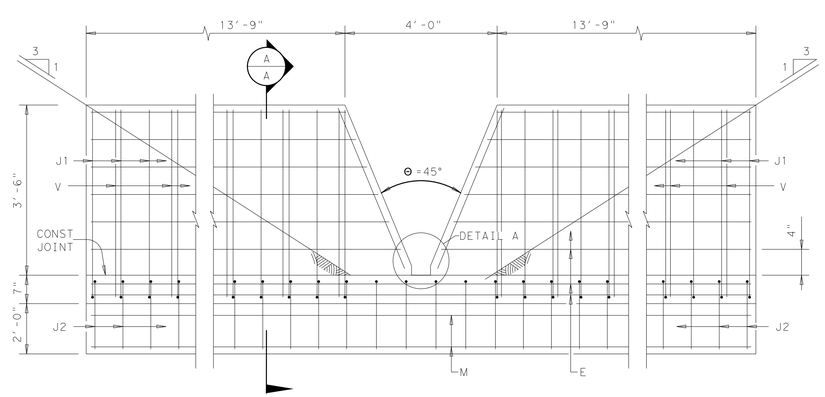

WEIR ELEVATION
NTS

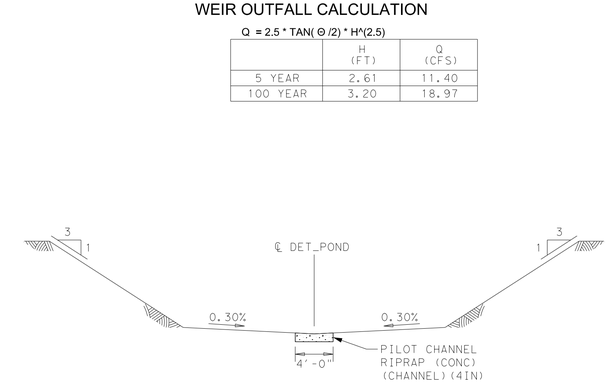

SECTION B-B
NTS

1 DETENTION POND

POND STAGE, STORAGE CALCULATION

PROP DISCHARGE, $Q_{PROP} = K * C * I * A$

PROP VOLUME, $V_{IN} = T_c * Q * 60$

EXIST VOLUME, $V_{OUT} = 0.5 * (T_D + T_c) * Q_X * 60$

STORAGE VOLUME, $*V = V_{IN} - V_{OUT}$

5 YEAR

	T_c (min)	I (in/hr)	K	C	A (acre)	Q (cfs)
EXIST	10	5.64	1.00	0.75	2.70	11.42
PROP	10	5.64	1.00	0.90	4.12	20.91

DURATION	INTENSITY	PROP DISCHARGE, Q_{PROP}	PROP VOLUME, V_{IN}	DURATION $T_c + T_D$	EXIST VOLUME, V_{OUT}	STORAGE VOLUME, ΔV
(minutes)	(in/hr)	(cfs)	Cu.Ft.	(minutes)	Cu.Ft.	Cu.Ft.
10	5.64	24.04	14,424	20	6,853	7,571
15	4.76	20.28	18,251	25	8,566	9,685
20	4.14	17.64	21,169	30	10,279	10,890
25	3.68	15.68	23,515	35	11,992	11,523
30	3.32	14.15	25,472	40	13,705	11,767
35	3.03	12.93	27,149	45	15,418	11,731
40	2.80	11.92	28,616	50	17,132	11,485
45	2.60	11.08	29,920	55	18,845	11,075
50	2.43	10.36	31,093	60	20,558	10,535
			REQUIRED STORAGE:		11,767	CUBIC FEET
					0.27	ACRE-FT

100 YEAR

	T_c (min)	I (in/hr)	K	C	A (acre)	Q (cfs)
EXIST	10	9.38	1.15	0.75	2.70	18.99
PROP	10	9.38	1.15	0.90	4.12	34.78

DURATION	INTENSITY	PROP DISCHARGE, Q_{PROP}	PROP VOLUME, V_{IN}	DURATION $T_c + T_D$	EXIST VOLUME, V_{OUT}	STORAGE VOLUME, ΔV
(minutes)	(in/hr)	(cfs)	Cu.Ft.	(minutes)	Cu.Ft.	Cu.Ft.
10	9.38	40.02	24,009	20	11,397	12,613
15	7.99	34.08	30,676	25	14,246	16,430
20	7.00	29.86	35,835	30	17,095	18,740
25	6.26	26.68	40,027	35	19,944	20,083
30	5.67	24.20	43,553	40	22,793	20,760
35	5.20	22.19	46,594	45	25,643	20,952
40	4.81	20.53	49,268	50	28,492	20,776
45	4.49	19.13	51,655	55	31,341	20,314
50	4.21	17.94	53,811	60	34,190	19,621
			REQUIRED STORAGE:		20,952	CUBIC FEET
					0.48	ACRE-FT
			PROP STORAGE:		30,654	CUBIC FEET
					0.70	ACRE-FT

WEIR OUTFALL CALCULATION

Q = 2.5 * TAN(Θ /2) * H^(2.5)

	H (FT)	Q (CFS)
5 YEAR	2.61	11.40
100 YEAR	3.20	18.97

N

0 10′ 20′ 40′
1"=20′

NOTES:

1. CALCULATIONS HAVE BEEN PERFORMED ACCORDING TO CITY OF MCKINNEY ENGINEERING DESIGN MANUAL, STORMWATER DESIGN REQUIREMENTS. APRIL 4, 2018.
2. PROVIDE CLASS C CONRETE (f'c = 3600 psi)
3. PROVIDE GRADE 60 REINFORCING STEEL.
4. COVER DIMENSIONS ARE CLEAR DIMENSIONS UNLESS NOTED OTHERWISE. DIMESNIONS ARE OUT-TO-OUT OF BAR.

LEGEND:

- 602 — PROPOSED MAJOR CONTOURS
- 596 — PROPOSED MINOR CONTOURS
- EXISTING CONTOURS
- PROPOSED STORM SEWER

Texas Department of Transportation
COPYRIGHT © 2021

LTRA
3320 Belt Line Rd
Farmers Branch, Texas 75234
LINA T. RAMEY & ASSOCIATES, INC.
Firm Registration No. F-782
STATE OF TEXAS
EVELYN M. LEE
110063
LICENSED
PROFESSIONAL ENGINEER
4/21/2021

DISTRICT (18)
COLLIN COUNTY
McKinney Area Engineering and Maintenance Facility
2205 TX-5, McKinney, TX 75069
PROJECT NO. 18-470420012

ISSUED: 2021.04.21
DRAWN BY: EL
REVISIONS:

#	DATE	INITIALS

DETENTION POND

C4.6

THIS DRAWING CREATED FOR PRODUCTION ON 22"x34" SHEET SIZE. DO NOT SCALE PRINTS.

GENERATED ON:

CONSTRUCTION ENTRANCE NOTES

1. STONE SHALL BE 3 TO 5 INCH DIAMETER CRUSHED ROCK OR ACCEPTABLE CRUSHED PORTLAND CEMENT CONCRETE.
2. WHEN NECESSARY, VEHICLES SHALL BE CLEANED TO REMOVE SEDIMENT PRIOR TO ENTRANCE ONTO A PUBLIC ROADWAY. WHEN WASHING IS REQUIRED, IT SHALL BE DONE ON AN AREA STABILIZED WITH CRUSHED STONE WITH DRAINAGE FLOWING AWAY FROM BOTH THE STREET AND THE STABILIZED ENTRANCE. ALL SEDIMENT SHALL BE PREVENTED FROM ENTERING ANY STORM DRAIN, DITCH OR WATERCOURSE USING APPROVED METHODS.
3. THE ENTRANCE SHALL BE MAINTAINED IN A CONDITION WHICH WILL PREVENT TRACKING OR FLOWING OF SEDIMENT ONTO PAVED SURFACES. THIS MAY REQUIRE PERIODIC TOP DRESSING WITH ADDITIONAL STONE AS CONDITIONS DEMAND. ALL SEDIMENT SPILLED, DROPPED, WASHED OR TRACKED ONTO PAVED SURFACES, MUST BE REMOVED IMMEDIATELY.
4. THE ENTRANCE MUST BE PROPERLY GRADED OR INCORPORATE A DRAINAGE SWALE TO PREVENT RUNOFF FROM LEAVING THE CONSTRUCTION SITE.

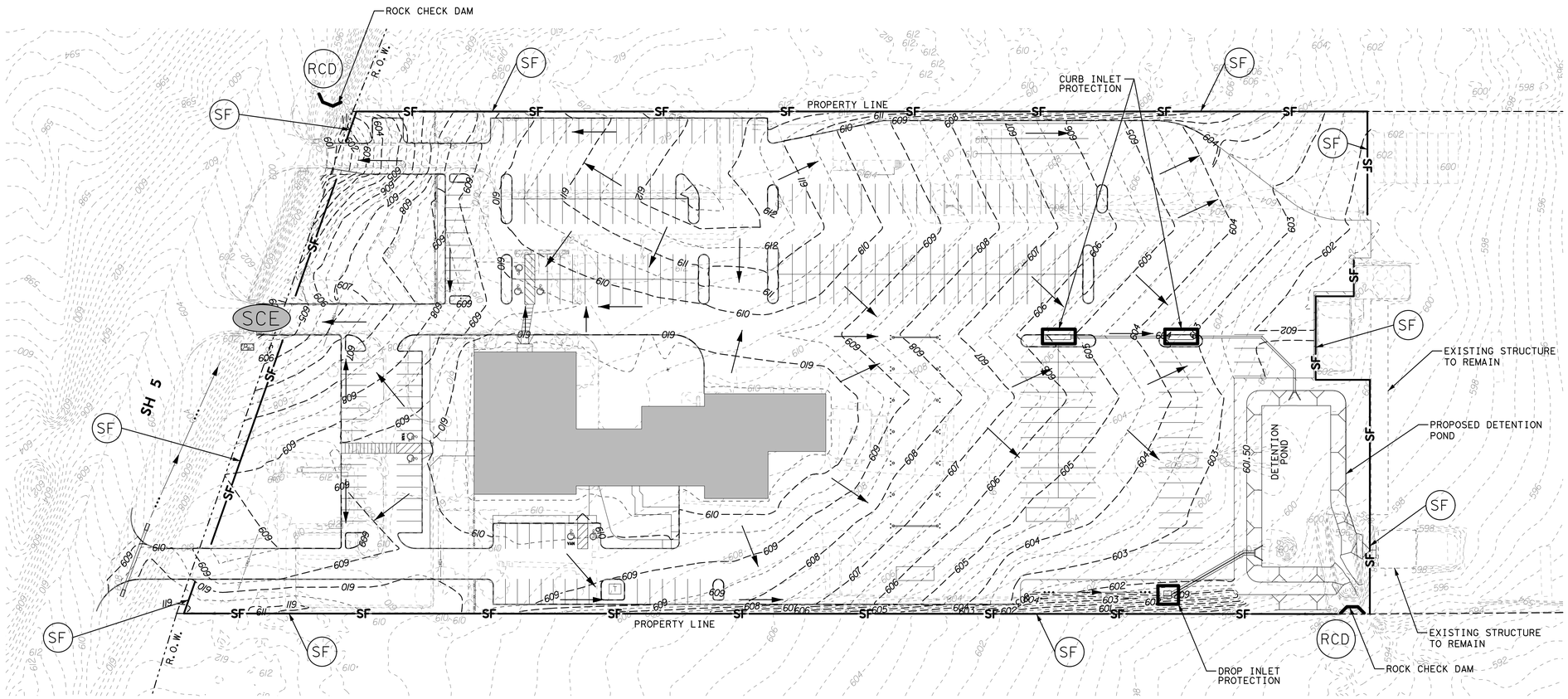

1 EROSION CONTROL PLAN

N

0 25′ 50′ 100′

1"=50′

DISTURBED AREA:

TOTAL DISTURBED AREA = 8.01 ACRES
PRE DEVELOPED SITE RUNOFF COEFFICIENT= 0.90
POST DEVELOPED SITE RUNOFF COEFFICIENT= 0.90

NOTES:

1. ALL CONSTRUCTION AND MATERIALS SHALL CONFORM TO NCTCOG BMP MANUAL.
2. CONTRACTOR SHALL INSTALL SILT FENCES AS SHOWN AND AS REQUIRED BY OWNER'S ENGINEER IF ADDITIONAL EROSION PROTECTION IS NEEDED.
3. CONTRACTOR SHALL CONTROL MUD ACCUMULATION ON ALL STREETS SURROUNDING THE PROJECT. NO MUD ACCUMULATION WILL BE ALLOWED ON PUBLIC STREETS.
4. MAINTAIN ALL FILTERS DURING CONSTRUCTION TO PREVENT ANY BLOCKAGES FROM ACCUMULATED SEDIMENT. ADDITIONAL SILT FENCES MAY BE REQUIRED DURING CONSTRUCTION AS SPECIFIED BY ENGINEER.
5. ALL PROPOSED PARKING AREAS TO BE PAVED AS SOON AS POSSIBLE AFTER SUBGRADE IS PREPARED.
6. CONTRACTOR SHALL REMOVE ALL TEMPORARY EROSION AND SEDIMENT CONTROLS ONLY WHEN THERE IS A SUFFICIENT GROWTH OF GROUND COVER TO PREVENT FURTHER EROSION.
7. ACCUMULATED SILT SHALL BE REMOVED WHEN IT REACHES A DEPTH OF 6 INCHES. THE SILT SHALL BE DISPOSED OF IN AN APPROVED SITE AND IN SUCH A MANNER AS TO NOT CONTRIBUTE TO ADDITIONAL SILTATION.

LEGEND:

602	PROPOSED CONTOURS
	PROPOSED CONTOURS
596	EXISTING CONTOURS
	DIRECTION OF FLOW/SLOPE
SF	SILT FENCE - APPROXIMATE LOCATION-OFFSET. (NO MORE THAN 1/4 ACRE OF UPLAND SLOPE AREA PER 100 FEET OF SILT FENCE)
	INLET PROTECTION
RCD	ROCK CHECK DAM
SCE	APPROXIMATE LOCATION OF STABILIZED CONSTRUCTION EXIT WITH ENTRANCE SIGN. COORDINATE WITH OWNER

Texas Department of Transportation
COPYRIGHT © 2021

LTRA
3320 Belt Line Rd
Farmers Branch, Texas 75234
LINA T. RAMEY & ASSOCIATES, INC.
Firm Registration No. F-782

STATE OF TEXAS
VINCENT V. MAZIDI
113088
LICENSED
PROFESSIONAL ENGINEER
4/21/2021

DISTRICT (18)
COLLIN COUNTY
McKinney Area Engineering and Maintenance Facility
2205 TX-5, McKinney, TX 75069
PROJECT NO. 18-47042001 2

ISSUED: 2021.04.21
DRAWN BY: VM
REVISIONS:

EROSION CONTROL PLAN

C5.1

THIS DRAWING CREATED FOR PRODUCTION ON 22"x34" SHEET SIZE. DO NOT SCALE PRINTS.

GENERATED ON:

2 KEY NOTES

1. TIE-IN TO EXISTING 16" WATERLINE WITH 16"x 2" TAPPING SLEEVE
2. PROP 2" WATER METER & BOX PROVIDED & INSTALLED BY CITY OF McKINNEY
3. PROP 3"x90° PVC BEND
4. CONNECT WATER SERVICE LINE TO PLUMBING
5. TIE-IN TO EXISTING 16" WATERLINE WITH 16"x 6" TAPPING SLEEVE
6. INSTALL FIRE LINE DOUBLE DETECTOR CHECK VAULT (PER CITY OF McKINNEY REQUIREMENTS)
7. INSTALL 6" TEE
8. INSTALL FIRE HYDRANT #1
9. PROP 6"x90° PVC BEND
10. INSTALL FIRE HYDRANT #2
11. CONNECT TO EXISTING WW MANHOLE. REPLACE DROP BOWL, DROP PIPE CHANNEL LINER & PIPE CLAMPS
12. PROP 5' DIA WW MANHOLE
13. PROP 4" BUILDING SERVICE (IN-S) PROP 4"x 4" PVC WYE FOR WW LINE
14. PROP 4" PVC WW CLEAN-OUT END LINE WW-2, INSTALL 4" CAP
15. PROP 4" PVC TWO-WAY WW CLEAN-OUT
16. PROP 4"x45° PVC BEND FOR WW LINE
17. CONNECT WW TO PROP PLUMBING
18. PROP 4" BUILDING SERVICE (IN-S) PROP 4"x 4" PVC WYE FOR WW LINE
19. PROP 4"x45° PVC BEND FOR WW LINE
20. CONNECT WW TO PROP PLUMBING
21. INSTALL ± 25 LF OF 4" PVC WW LINE
22. PROP 4" PVC WW CLEAN-OUT W/HEAVY DUTY FRAME AND COVER END LINE WW-1, INSTALL 4" CAP
23. INSTALL ± 283 LF OF 4" PVC WW LINE
24. INSTALL ± 67 LF OF 4" PVC WW LINE
25. INSTALL ± 30 LF OF 4" PVC WW LINE
26. INSTALL ± 137 LF OF 6" PVC WW LINE
27. INSTALL 3" DIA X 2" DIA REDUCER

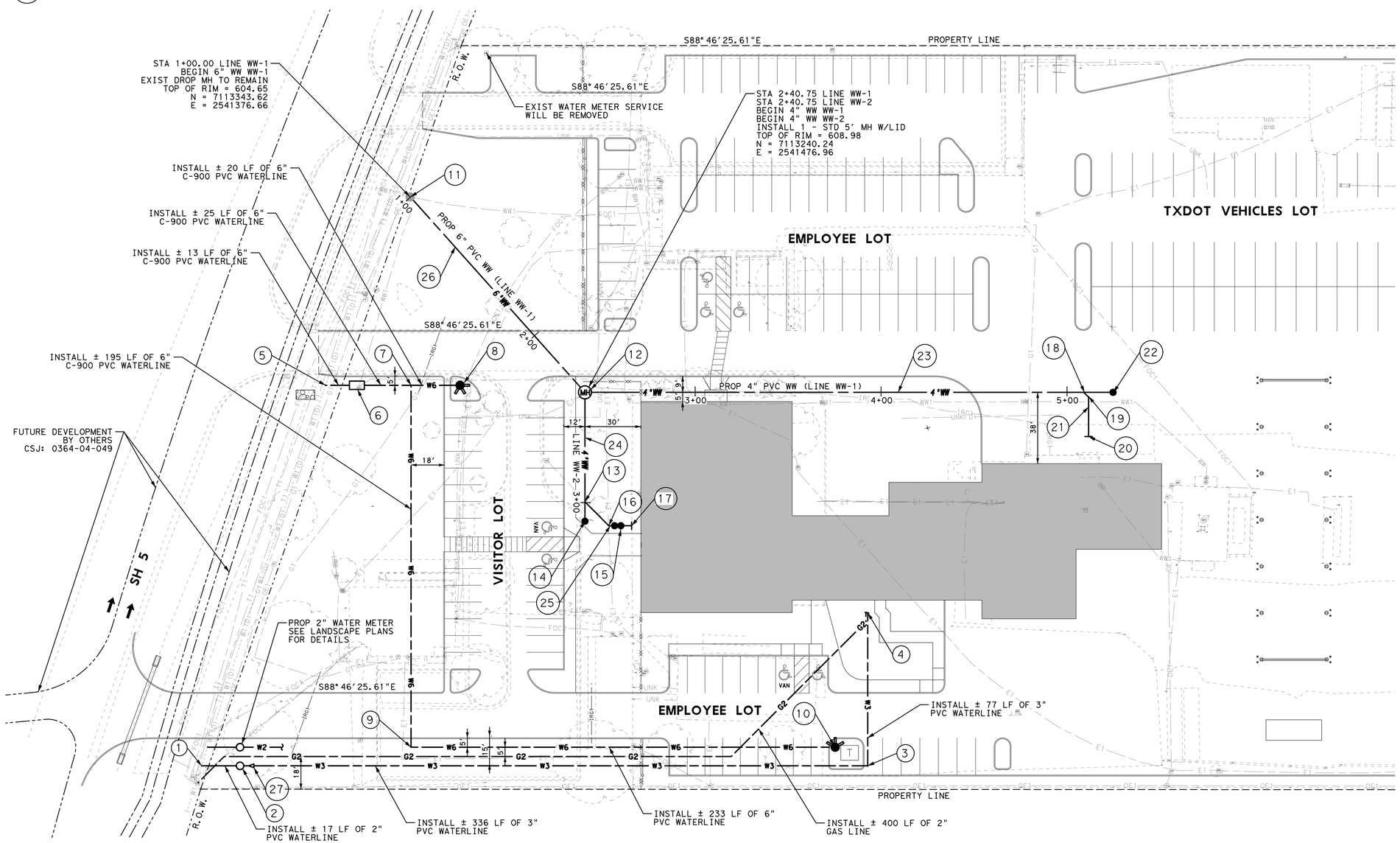

1 WATER & WASTEWATER PLAN

N

0 10' 20' 30' 60'
1"=30'

NOTES:

1. THE CONTRACTOR SHALL FIELD VERIFY THE HORIZONTAL AND VERTICAL LOCATION OF ALL EXISTING UTILITIES WHERE PROPOSED UTILITIES ARE BEING CONNECTED, PRIOR TO START OF CONSTRUCTION. THE CONTRACTOR SHALL NOTIFY ENGINEER IMMEDIATELY IF A CONFLICT DISCOVERED.
2. THE CONTRACTOR SHALL VERIFY ALL DIMENSIONS SHOWN, COORDINATING THE HORIZONTAL AND VERTICAL LOCATION OF ALL UTILITY SERVICES ENTERING THE BUILDING AND/OR CROSSING OTHER UTILITIES.
3. EXISTING UTILITIES SERVING EXISTING FACILITIES TO REMAIN IN SERVICE UNTIL NEW MAINTENANCE FACILITY IS READY FOR OCCUPANCY.
4. ALL BURIED DOMESTIC WATER LINES SIZE 3" AND SMALLER SHALL BE SCH 40 PVC IN ACCORDANCE WITH ASTM D1785 WITH SCH 40 PVC SOCKET, SOLVENT WELD FITTINGS IN ACCORDANCE WITH ASTM D2466.
5. ALL GRAVITY WASTEWATER PIPE & FITTINGS SHALL BE SDR 26 PVC, TYPE PSM IN ACCORDANCE WITH ASTM D3034 UNLESS INDICATED OR SPECIFIED OTHERWISE.

LEGEND:

- EXIST WW MANHOLE
- PROP WW MANHOLE
- PROP FIRE HYDRANT
- W6 — 6" WATERLINE
- W3 — 3" WATERLINE
- W2 — 2" WATERLINE
- 6"WW — 6" WW LINE
- 4"WW — 4" WW LINE
- G2 — 2" GAS LINE

SUE SURVEY LEGEND:

LINE TYPE	UTILITY TYPE
OE1	OVERHEAD ELECTRIC
E1	ELECTRIC
E1 (D) E1 (D)	ELECTRIC
FOC1	AT&T FIBER OPTIC
FOC1 (D) FOC1 (D)	AT&T FIBER OPTIC
T1	AT&T TELEPHONE
T1 (D) T1 (D)	AT&T TELEPHONE
IRG1 (D) IRG1 (D)	IRRIGATION
WW1 (D) WW1 (D)	WASTEWATER
SD1	STORM SEWER
G1 (D) G1 (D)	GAS
UNK	UNKNOWN
UNK (D)	UNKNOWN

SYMBOLS

- ELECTRIC METER
- ELECTRIC HANDHOLE
- POWER POLE
- LIGHT POLE
- TELEPHONE PEDESTAL
- TELEPHONE HAND HOLE
- WATER METER
- CLEAN OUT
- STORM SEWER DRAIN
- GAS RISER
- GAS METER
- OUT OF SCOPE

Texas Department of Transportation

COPYRIGHT © 2021

LTRA
3320 Belt Line Rd
Farmers Branch, Texas 75234
LINA T. RAMEY & ASSOCIATES, INC.
Firm Registration No. F-782
STATE OF TEXAS VINCENT V. MAZIDI 113088 LICENSED PROFESSIONAL ENGINEER
4/21/2021

DISTRICT (18)
COLLIN COUNTY
McKinney Area Engineering and Maintenance Facility
2205 TX-5, McKinney, TX 75069
PROJECT NO. 18-470420012

ISSUED: 2021.04.21
DRAWN BY: VM
REVISIONS:

WATER & WASTEWATER PLAN

C6.1

THIS DRAWING CREATED FOR PRODUCTION ON 22"x34" SHEET SIZE. DO NOT SCALE PRINTS.

GENERATED ON:

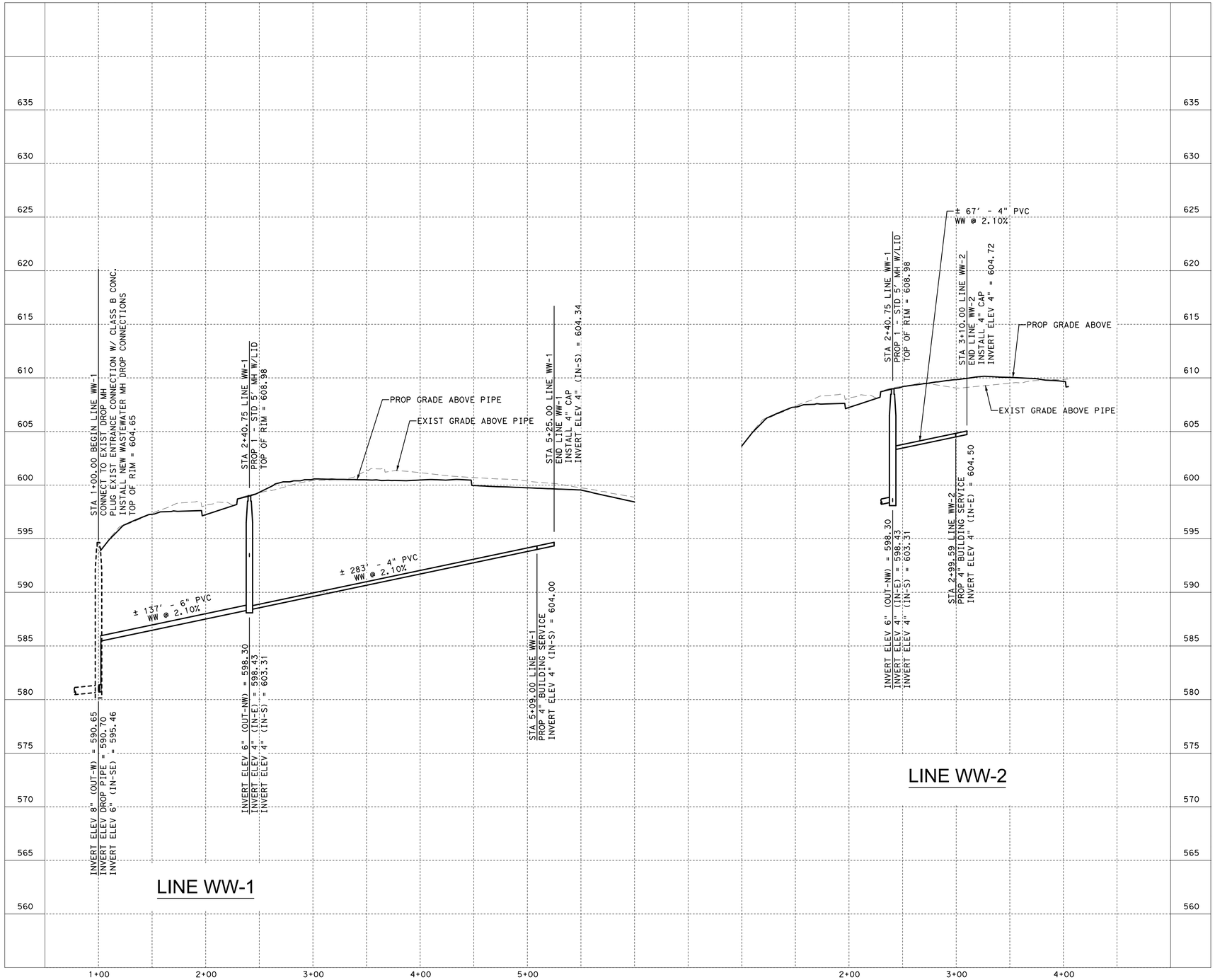

1 WASTEWATER PROFILES

HORIZ: 0 50' 100'
1"=50'

VERT: 0 5' 10'
1"=5'

Texas Department of Transportation

COPYRIGHT © 2021

LTRA
3320 Belt Line Rd
Farmers Branch, Texas 75234
LINA T. RAMEY & ASSOCIATES, INC.
Firm Registration No. F-782

STATE OF TEXAS
VINCENT V. MAZIDI
113088
LICENSED
PROFESSIONAL ENGINEER
4/21/2021

DISTRICT (18)
COLLIN COUNTY
McKinney Area Engineering and Maintenance Facility
2205 TX-5, McKinney, TX 75069
PROJECT NO. 18-470420012

ISSUED: 2021.04.21
DRAWN BY: VM
REVISIONS:

WASTEWATER PROFILES

C6.2

THIS DRAWING CREATED FOR PRODUCTION ON 22"x34" SHEET SIZE. DO NOT SCALE PRINTS.

GENERATED ON:

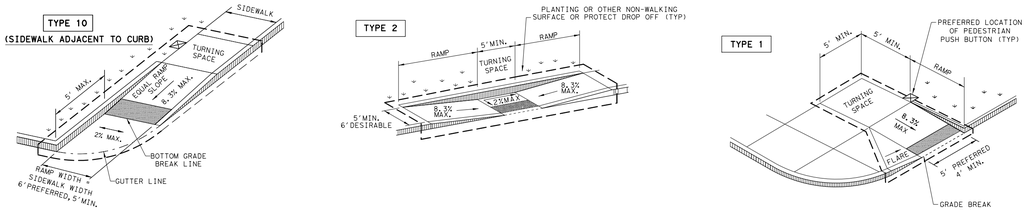

CURB RAMP DETAILS

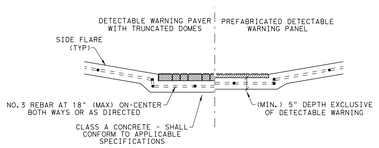

SECTION VIEW DETAIL
CURB RAMP AT DETECTIBLE WARNINGS

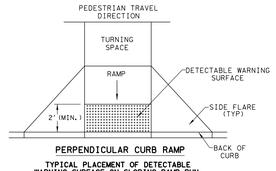

PERPENDICULAR CURB RAMP
TYPICAL PLACEMENT OF DETECTABLE WARNING SURFACE ON SLOPING RAMP RUN.

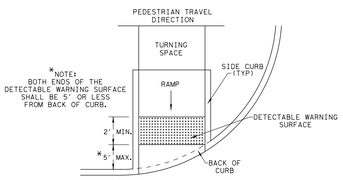

DIRECTIONAL CURB RAMP
TYPICAL PLACEMENT OF DETECTABLE WARNING SURFACE ON SLOPING RAMP RUN.

CURB RAMP DETECTIBLE WARNINGS SURFACE DETAILS

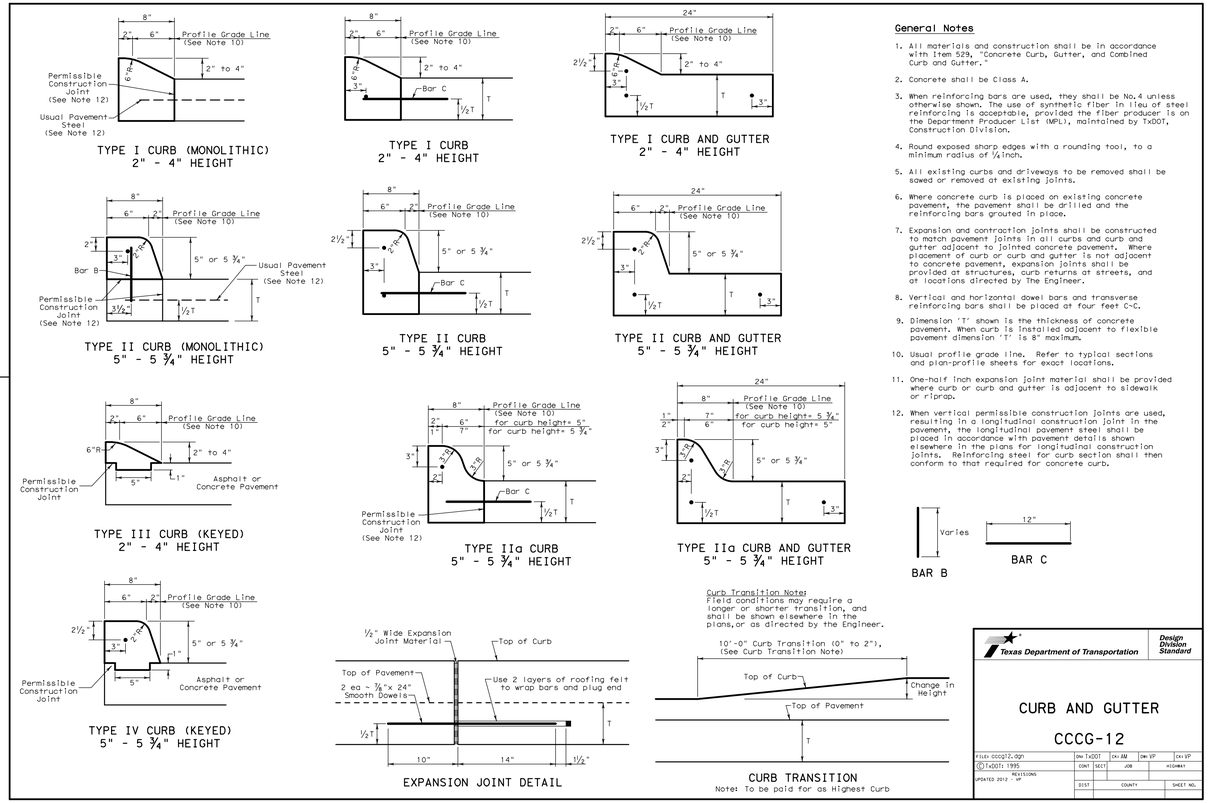

General Notes

1. All materials and construction shall be in accordance with Item 529, "Concrete Curb, Gutter, and Combined Curb and Gutter."
2. Concrete shall be Class A.
3. When reinforcing bars are used, they shall be No.4 unless otherwise shown. The use of synthetic fiber in lieu of steel reinforcing is acceptable, provided the fiber producer is on the Department Producer List (MPL), maintained by TxDOT, Construction Division.
4. Round exposed sharp edges with a rounding tool, to a minimum radius of ¼ inch.
5. All existing curbs and driveways to be removed shall be sawed or removed at existing joints.
6. Where concrete curb is placed on existing concrete pavement, the pavement shall be drilled and the reinforcing bars grouted in place.
7. Expansion and contraction joints shall be constructed to match pavement joints in all curbs and curb and gutter adjacent to jointed concrete pavement. Where placement of curb or curb and gutter is not adjacent to concrete pavement, expansion joints shall be provided at structures, curb returns at streets, and at locations directed by The Engineer.
8. Vertical and horizontal dowel bars and transverse reinforcing bars shall be placed at four feet C~C.
9. Dimension 'T' shown is the thickness of concrete pavement. When curb is installed adjacent to flexible pavement dimension 'T' is 8" maximum.
10. Usual profile grade line. Refer to typical sections and plan-profile sheets for exact locations.
11. One-half inch expansion joint material shall be provided where curb or curb and gutter is adjacent to sidewalk or riprap.
12. When vertical permissible construction joints are used, resulting in a longitudinal construction joint in the pavement, the longitudinal pavement steel shall be placed in accordance with pavement details shown elsewhere in the plans for longitudinal construction joints. Reinforcing steel for curb section shall then conform to that required for concrete curb.

Texas Department of Transportation — Design Division Standard

CURB AND GUTTER

CCCG-12

FILE: cccg12.dgn	DN: TxDOT	CK: AM	DW: VP	CK: VP
© TxDOT: 1995	CONT	SECT	JOB	HIGHWAY
REVISIONS UPDATED 2012 - MP	DIST	COUNTY		SHEET NO.

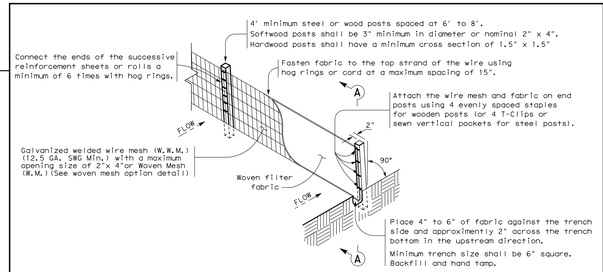

TEMPORARY SEDIMENT CONTROL FENCE

SCF

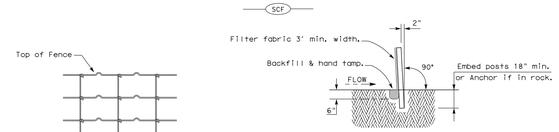

SECTION A-A

HINGE JOINT KNOT WOVEN MESH (OPTION) DETAIL

Galvanized hinge joint knot woven mesh (12.5 GA.SWG Min.) requires a minimum of five horizontal wires spaced at a maximum of 12 inches apart and all vertical wires spaced at a maximum of 12 inches apart.

SEDIMENT CONTROL FENCE USAGE GUIDELINES

A sediment control fence may be constructed near the downstream perimeter of a disturbed area along a contour to intercept sediment from overland runoff. A 2 year storm frequency may be used to calculate the flow rate to be filtered.

Sediment control fence should be sized to filter a maximum flow through rate of 100 GPM/FT^2. Sediment control fence is not recommended to control erosion from a drainage area larger than 2 acres.

LEGEND

Sediment Control Fence — SCF

GENERAL NOTES

1. Vertical tracking is required on projects where soil distributing activities have occurred unless otherwise approved.
2. Perform vertical tracking on slopes to temporarily stabilize soil.
3. Provide equipment with a track undercarriage capable of producing linear soil impressions measuring a minimum of 12" in length by 2" to 4" in width by 1/2" to 2" in depth.
4. Do not exceed 12" between track impressions.
5. Install continous linear track impressions where the minimum 12" length impressions are perpendicular to the slope or direction of water flow.

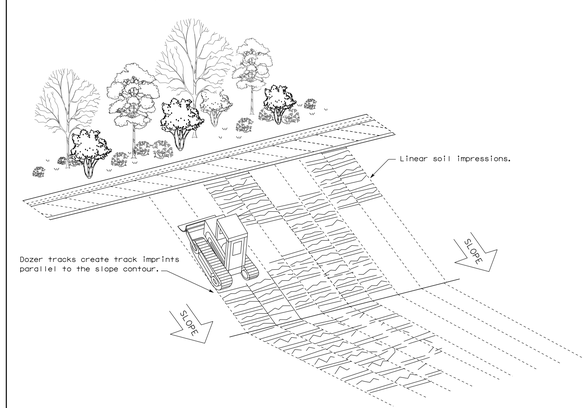

VERTICAL TRACKING

Texas Department of Transportation — Design Division Standard

TEMPORARY EROSION, SEDIMENT AND WATER POLLUTION CONTROL MEASURES

FENCE & VERTICAL TRACKING

EC(1)-16

FILE: ec116	DN: TxDOT	CK: KM	DW: VP	CK: TX: LS
© TxDOT: JULY 2016	CONT	SECT	JOB	HIGHWAY
REVISIONS	DIST	COUNTY		SHEET NO.

1 CIVIL DETAILS 1

GENERATED ON:

Texas Department of Transportation

COPYRIGHT © 2021

LTRA
3320 Belt Line Rd
Farmers Branch, Texas 75234

LINA T. RAMEY & ASSOCIATES, INC.
Firm Registration No. F-782

STATE OF TEXAS
VINCENT V. MAZIDI
113088
LICENSED PROFESSIONAL ENGINEER
4/21/2021

DISTRICT (18)
COLLIN COUNTY
McKinney Area Engineering and Maintenance Facility
2205 TX-5, McKinney, TX 75069
PROJECT NO. 18-470420012

ISSUED: 2021.04.21
DRAWN BY: VM
REVISIONS:

CIVIL DETAILS

C7.1

THIS DRAWING CREATED FOR PRODUCTION ON 22"x34" SHEET SIZE. DO NOT SCALE PRINTS.

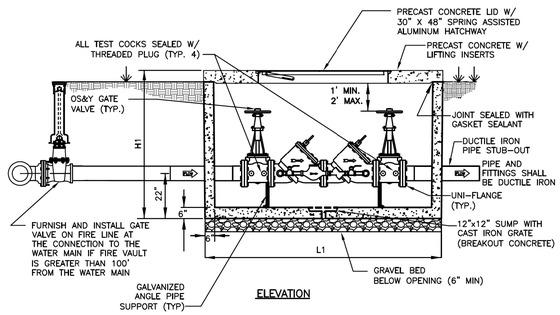

ELEVATION

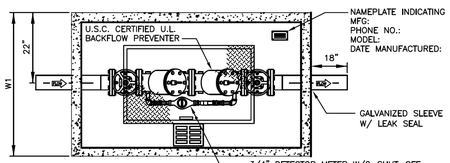

PLAN VIEW

SIZE	L1	W1	H1
4"	7'-10"	4'-4"	6'-0"
6"	7'-10"	4'-4"	6'-0"
8"	8'-8"	5'-0"	6'-0"
10"	9'-2"	5'-8"	6'-6"

NOTES:

1. CONCRETE: MINIMUM DESIGN STRENGTH OF 4500 PSI AT 28 DAYS. UNIT IS OF MONOLITHIC CONSTRUCTION AT FLOOR AND FIRST STAGE OF WALL WITH SECTIONAL RISER TO REQUIRED DEPTH.
2. REINFORCEMENT: GRADE 60 REINFORCED. STEEL BAR CONFORMING TO ASTM A615 ON REQUIRED CENTERS OR EQUAL.
3. HATCHWAY: 1/4" ALUMINUM DIAMOND PLATE COVER WITH EXTRUDED ALUMINUM FRAME. HATCH TO BE FURNISHED WITH 316 STAINLESS STEEL SNAP LOCK & BRASS HINGES. TRAFFIC RATED HATCHWAY WHERE NEEDED.
4. PRECAST VAULT SHALL BE FROM PARK EQUIPMENT COMPANY MATCHING DETAIL SHOWN OR APPROVED OTHER. MINIMUM 6" CLEARANCE REQUIRED FROM INTERIOR WALLS.

McKINNEY TEXAS Unique by nature.	DOUBLE DETECTOR CHECK VAULT	DATE: DECEMBER 2018
		STANDARD DRAWING NO. 4191M
	CITY OF McKINNEY, TEXAS	

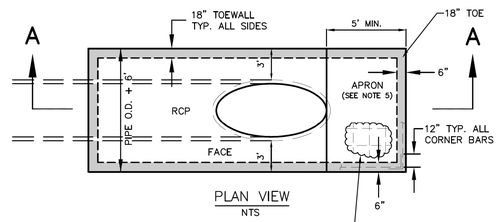

PLAN VIEW

NTS

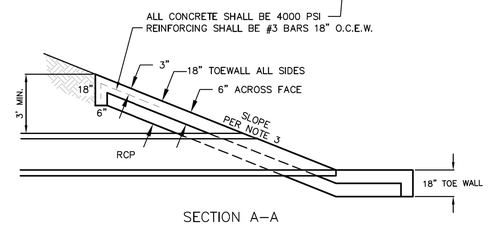

SECTION A–A

NTS

NOTES:

1. ROCK RIPRAP PROVIDED BEYOND APRON SHALL BE AS SPECIFIED IN PLANS BY DESIGN ENGINEER.
2. POSITIVE DRAINAGE MUST BE PROVIDED BEYOND CONCRETE APRON.
3. HEADWALL SLOPE SHALL BE SPECIFIED IN PLANS BY DESIGN ENGINEER (MAX. 3:1)
4. CONCRETE SHALL BE 4000 PSI.
5. CONCRETE APRON OR APPROVED EQUAL.

McKINNEY TEXAS Unique by nature.	TYPE C HEADWALL	DATE: DECEMBER 2018
		STANDARD DRAWING NO. 6090M
	CITY OF McKINNEY, TEXAS	

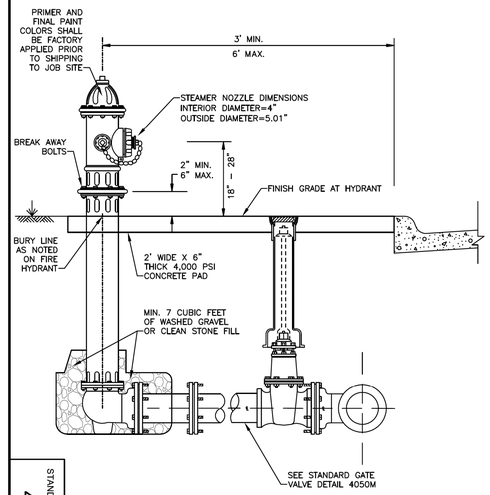

NOTES:

1. FIRE HYDRANTS SHALL BE THREE WAY BREAKAWAY TYPE NO LESS THAN 5-1/4 INCHES IN SIZE AND MUST CONFORM TO AWWA SPECIFICATIONS C-502. THEY SHALL BE MUELLER "SUPER CENTURION", AMERICAN FLOW CONTROL "WATEROUS PACER", WITH ALL BRONZE TO BRONZE MOVING PARTS.
2. ALL JOINTS SHALL BE RESTRAINED.
3. TYPICAL VALVE: ACTUAL VALVE LOCATION WILL DEPEND ON LOCATION OF WATER MAIN.
4. REFER TO STANDARD DETAIL 4120M FOR ADDITIONAL LAYOUT INFORMATION.
5. TWO 2-1/2 INCH NST HOSE CONNECTIONS ARE REQUIRED.
6. THE 4 INCH DIAMETER STEAMER CONNECTION SHALL BE 4.800 PITCH WITH 4 THREADS PER INCH.
7. THE OPERATING NUT SHALL BE 1¼ INCH P TO F PENTAGON NUT, OPEN LEFT.
8. THE STEAMER NOZZLE SHALL FACE THE FIRE LANE, ADJACENT ROADWAY OR AS DIRECTED BY THE FIRE DEPARTMENT.
9. ALL BOLTS SHALL BE THE SAME SIZE.
10. 45° BENDS MAY BE USED TO ACCOMMODATE SITE CONDITIONS FOR FIRE HYDRANT LEADS.
11. ONLY ONE BARREL EXTENSION (6", 12", 18", OR 24") CAN BE USED ON EACH FIRE HYDRANT. THE BREAKAWAY COUPLER ON THE STEM NEEDS TO LINE UP WITH THE BREAKAWAY LOCATION ON THE BARREL.
12. ALL FIRE HYDRANTS ARE TO BE PAINTED WITH TWO COATS OF DIFFUSED ALUMINUM, SILVER PAINT. THE TOP BONNET INCLUDING THE LIP AND ALL NOZZLE CAPS SHALL BE PAINTED THE APPROPRIATE COLOR BASED ON THE WATER MAIN SIZE AS FOLLOWS: FOR 8 INCH AND LARGER WATER MAINS THE COLOR SHALL BE TNEMEC SERIES 2H HI-BUILD TNMEC-GLOSS, TRUE BLUE SAFETY.
13. PRIMER AND FINAL PAINT COLORS SHALL BE FACTORY APPLIED PRIOR TO SHIPPING TO JOB SITE.

SHEET 1 OF 2

STANDARD DRAWING NO. 4120M

McKINNEY TEXAS Unique by nature.	FIRE HYDRANT INSTALLATION	DATE: DECEMBER 2018
		STANDARD DRAWING NO. 4120M
	CITY OF McKINNEY, TEXAS	

METER BOX TABLE

1" WATER SERVICE	2" WATER SERVICES
DFW1818TEX-EJ-1SAF MCK-BODY	DFW2818-DR-1SAF MCK-BODY
DFW-18G-EJ – RING	DFW-18G-EJ – LID
DFW18-1SAF MCK-LID	DFW20-1SAF LARGE MCK-LID

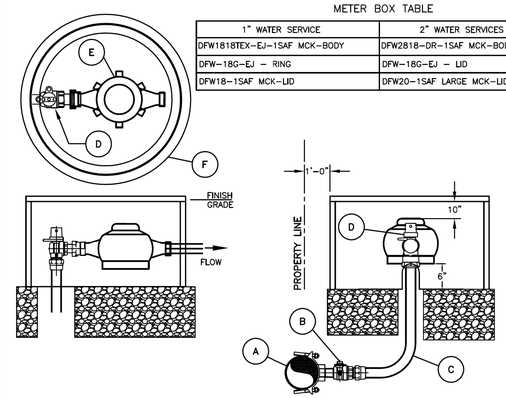

NOTES:

1. SERVICE PIPE SHALL BE 1" OR 2" SEAMLESS 250 PSI BLUE COLORED POLYETHYLENE ASTM D2737, SDR 9, CTS WATER SERVICE PIPE, NSF61 APPROVED.
2. TOP OF METER BOXES SHALL BE 1" ABOVE FINISHED GRADE.
3. METER BOX SHALL HAVE A MINIMUM OF 6" OF GRAVEL BENEATH METER BOX AS ILLUSTRATED.
4. LOCATION OF THE METER BOX SHALL BE LOCATED TO ALLOW 6" CLEARANCE FROM CURB.

MATERIAL LIST:

A. SERVICE SADDLE SHALL BE BRASS WITH DOUBLE BRONZE FLATTENED STRAPS OR STAINLESS STEEL DOUBLE BOLT WIDE STRAPS. NO BANDED OR HINGED STRAPS SHALL BE ALLOWED. SERVICE SADDLES SHALL MEET AWWA/CC TAPPING OUTLET (TAPERED THREADS) REQUIREMENTS. ALL SERVICE SADDLES SHALL BE ; FORD MODELS 202B AND 202S, CAMBRIDGE MODELS SERIES 810 AND 811, A.Y. McDONALD MODELS 3845 AWWA AND 3825 AWWA, AND MUELLER WATER PRODUCTS, INC. MODELS BR 2 B AND BR 2 S OR APPROVED EQUAL. PVC WATER LINES REQUIRE STRAPS TO BE A MINIMUM OF 2" WIDE.
B. 1" OR 2" CORPORATION STOP: 300 PSI BALL TYPE VALVE, AWWA X B COMPRESSION, NSF61 APPROVED (H-15008N BY MUELLER CO. OR APPROVED EQUAL).
C. 1" OR 2" SERVICE PIPE SHALL BE SEAMLESS 200 PSI BLUE COLORED POLYETHYLENE ASTM D2737, SDR9, CTS WATER SERVICE PIPE, NSF61 APPROVED.
D. 1" OR 2" LOCKING ANGLE METER VALVE: 1" OR 2" FIP INLET, 1" OR 2" SWIVEL COUPLING D NUT OUTLET, 300 PSI BALL TYPE VALVE ONLY, FULL PORT DESIGN ONLY, VALVE PASSAGE AND BALL IS EQUAL SIZE TO SMALLEST END CONNECTION, NON BLOW OUT STEM, UNFILLED TEFLON SEALS, NSF61 APPROVED (H-14258N BY MUELLER CO. OR APPROVED EQUAL).
E. WATER METERS CENTERED IN BOX AS ILLUSTRATED.
F. PLASTIC ROUND METER BOX (SEE TABLE ABOVE).

McKINNEY TEXAS Unique by nature.	SINGLE WATER SERVICE INSTALLATION	DATE: DECEMBER 2018
		STANDARD DRAWING NO. 4131M
	CITY OF McKINNEY, TEXAS	

1 CIVIL DETAILS 2

GENERATED ON:

Texas Department of Transportation

COPYRIGHT © 2021

LTRA
3320 Belt Line Rd
Farmers Branch, Texas 75234
LINA T. RAMEY & ASSOCIATES, INC.
Firm Registration No. F-782

STATE OF TEXAS
VINCENT V. MAZIDI
113088
LICENSED PROFESSIONAL ENGINEER
4/21/2021

DISTRICT (18)
COLLIN COUNTY
McKinney Area Engineering and Maintenance Facility
2205 TX-5, McKinney, TX 75069
PROJECT NO. 18-470420012

ISSUED: 2021.04.21
DRAWN BY: VM
REVISIONS:

CIVIL DETAILS
C7.2

THIS DRAWING CREATED FOR PRODUCTION ON 22"x34" SHEET SIZE DO NOT SCALE PRINTS.

NOTES:

1. FIRST MAIN LINE JOINT TO BE A MIN. OF 5' LONG.
2. IF FALSE M.H. ARE REQUIRED, THEY SHALL BE CONSTRUCTED, INSTALLED AND REMOVED PER STD. DWG. NO. 5100M.
3. M.H.'S LOCATED OUTSIDE OF PAVING SHALL BE CONSTRUCTED WITH A CONCRETE MOW STRIP PER STD. DWG. NO. 7005M.
4. REFER TO STD. DWG. NO. 5031M FOR INFLOW PROTECTION AT MANHOLE GRADE RINGS, MANHOLE JOINTS AND ON OUTSIDE OF STRUCTURE.
5. CONCRETE SHALL BE 5,000 PSI 28 DAY STRENGTH.
6. REINFORCING SHALL MEET OR EXCEED ASTM C478 REQUIREMENTS.

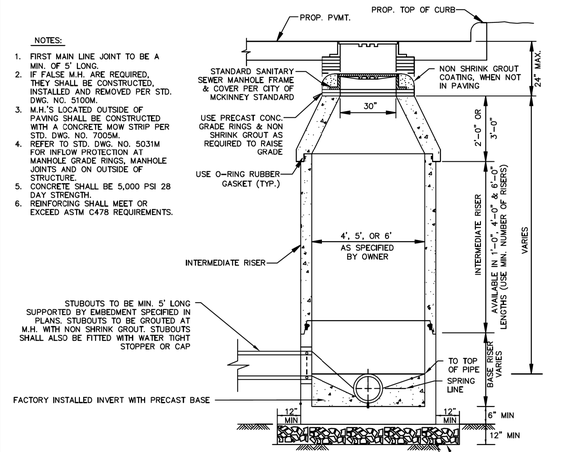

PRECAST BASE

N.T.S.

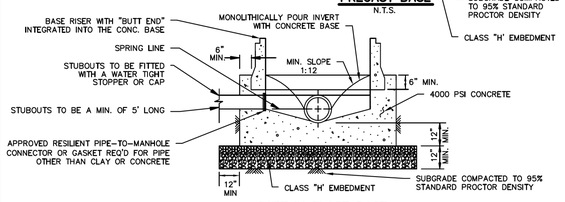

CAST IN PLACE BASE

N.T.S.

REFER TO STD. DWG. NO. 5030M

McKINNEY TEXAS Unique by nature.	WASTEWATER MANHOLE PRECAST	DATE: DECEMBER 2018
		STANDARD DRAWING NO.
	CITY OF McKINNEY, TEXAS	5020M

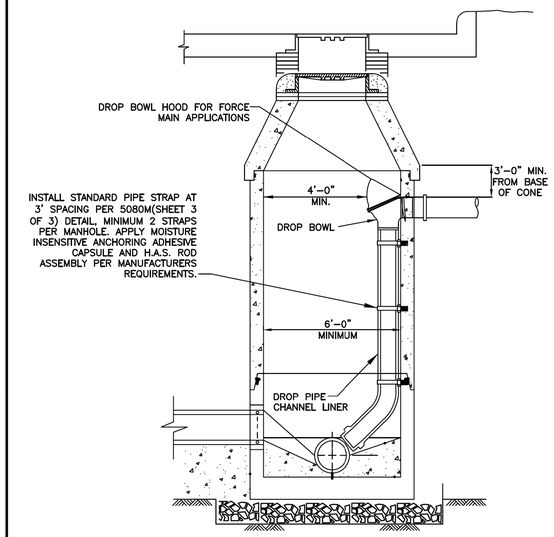

ELEVATION

N.T.S.

NOTE:

1. DROP BOWL, DROP PIPE CHANNEL LINER AND STAINLESS STEEL PIPE CLAMPS AS MANUFACTURED BY RELINER/DURAN INC. OR APPROVED EQUAL.
2. INSIDE DROP CONNECTIONS MAY ONLY BE USED ON NEW MANHOLES.
3. EVALUATE EXISTING MANHOLES TO PROVIDE 4'-0" MINIMUM CLEARANCE BETWEEN DROP BOWL APPARATUS AND INSIDE WALL OF MANHOLE. IF MINIMUM CLEARANCE CANNOT BE ACHIEVED AN OUTSIDE DROP WILL BE ALLOWED.

SHEET 1 OF 2

McKINNEY TEXAS Unique by nature.	WASTEWATER MANHOLE DROP CONNECTIONS	DATE: DECEMBER 2018
		STANDARD DRAWING NO.
	CITY OF McKINNEY, TEXAS	5080M

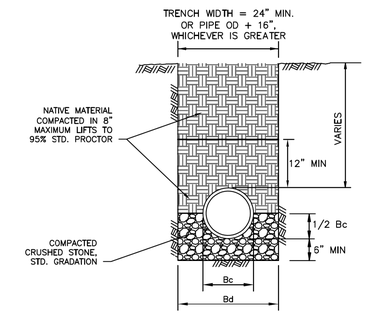

CLASS "B"

N.T.S.

NOTES:

1. Bc=OUTSIDE DIAMETER OF PIPE
2. Bd= TRENCH WIDTH
3. IN-PLACE DENSITY/MOISTURE CONTENT SHALL BE TESTED AND VERIFIED AS SPECIFIED BY THE CITY, OR AT AN AVERAGE FREQUENCY OF ONCE PER 300 LINEAR FEET PER ONE FOOT OF DEPTH.

McKINNEY TEXAS Unique by nature.	CLASS "B" EMBEDMENT STORM SEWER PIPE	DATE: DECEMBER 2018
		STANDARD DRAWING NO.
	CITY OF McKINNEY, TEXAS	3020M

1 CIVIL DETAILS 3

GENERATED ON:

Texas Department of Transportation
COPYRIGHT © 2021

LTRA
3320 Belt Line Rd
Farmers Branch, Texas 75234
LINA T. RAMEY & ASSOCIATES, INC.
Firm Registration No. F-782

STATE OF TEXAS
VINCENT V. MAZIDI
113088
LICENSED
PROFESSIONAL ENGINEER
4/21/2021

DISTRICT (18)
COLLIN COUNTY
McKinney Area Engineering and Maintenance Facility
2205 TX-5, McKinney, TX 75069
PROJECT NO. 18-470420012

ISSUED: 2021.04.21
DRAWN BY: VM
REVISIONS:

CIVIL DETAILS
C7.3

THIS DRAWING CREATED FOR PRODUCTION ON 22"x34" SHEET SIZE. DO NOT SCALE PRINTS.

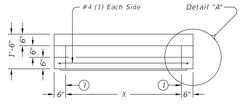

ELEVATION VIEW

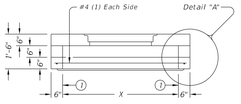

ELEVATION VIEW

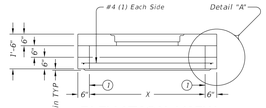

ELEVATION VIEW

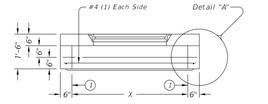

ELEVATION VIEW

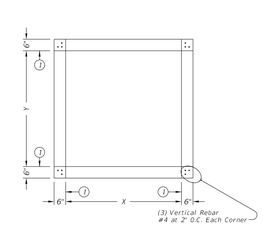

PLAN VIEW
NO OPENINGS

STYLE 'SL'

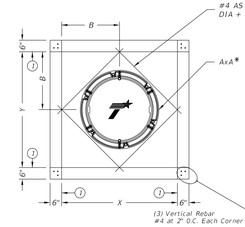

PLAN VIEW
32" DIA CAST-IN RING & COVER

STYLE 'RC'

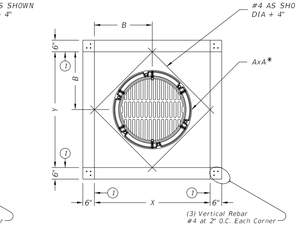

PLAN VIEW
32" DIA CAST-IN RING & GRATE

STYLE 'RG'

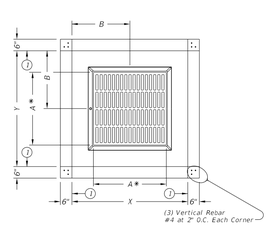

PLAN VIEW
CAST-IN FRAME & GRATE

STYLE 'FG'

(1) Matches inside face of wall of precast base or riser below inlet.

Style	Size (X x Y)	A x A*	B x B	Short Span Reinf Steel Area	Long Span Reinf Steel Area
SL	3'x3'	n/a	n/a	0.37 in²/ft	0.37 in²/ft
RC,RG	3'x3'	32" Dia	1.5'x1.5'	0.37 in²/ft	0.37 in²/ft
FG	3'x3'	3'x3'	1.5'x1.5'	0.37 in²/ft	0.37 in²/ft
SL	4'x4'	n/a	n/a	0.34 in²/ft	0.34 in²/ft
RC,RG	4'x4'	32" Dia	2'x2'	0.34 in²/ft	0.34 in²/ft
FG	4'x4'	3'x3'	2'x2'	0.34 in²/ft	0.34 in²/ft
FG	4'x4'	4'x4'	2'x2'	0.34 in²/ft	0.34 in²/ft
SL	5'x5'	n/a	n/a	0.43 in²/ft	0.43 in²/ft
RC,RG	5'x5'	32" Dia	2.5'x2.5'	0.68 in²/ft	0.68 in²/ft
FG	5'x5'	3'x3'	2.5'x2.5'	0.43 in²/ft	0.43 in²/ft
FG	5'x5'	4'x4'	2.5'x2.5'	0.43 in²/ft	0.43 in²/ft

* Nominal frame/grate or ring/cover size.

FABRICATION NOTES:

1. Provide Class "H" concrete in accordance with Item 421 and having a minimum compressive strength of 5,000 psi.
2. Provide Grade 60 reinforcing steel or equivalent area of WWR.
3. Provide clear cover of ½" to reinforcing from bottom of slab for structural reinforcement. Place short span reinforcing closest to surface.
4. No substitution is allowed for diagonal #4 bars around openings.
5. Design tongue and groove joints for full closure on both shoulders. Minimum spigot depth is ½".
6. Provide lifting devices in conformance with Manufacturer's recommendations.

INSTALLATION NOTES:

1. PAZD is for use in ditches and medians outside of the horizontal clearance (clear zone). Precast Area Zone Drain is not intended for direct traffic and may not be placed in roadway.
2. Seal tongue and groove joints with preformed or bulk mastic in conformance with Manufacturer's recommendations. Tongue and groove joints may be grouted no more than 1" between each section, or ½ the joint depth, whichever is greater.
3. Do not grout rubber gasket joints without Manufacturer's recommendation.

GENERAL NOTES:

1. Designed according to ASTM C913.
2. Payment for inlet is per Item 465, "Junction Boxes, Manholes, and Inlets" by type, style, size, and opening size (when applicable).

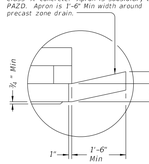

DETAIL "A"
(Reinforcing not shown for clarity)
When an apron is to be cast around PAZD, use detail above to create an apron ledge on all 4 sides.

Texas Department of Transportation | Bridge Division Standard

PRECAST AREA ZONE DRAIN

PAZD

FILE: pres008-20.dgn	DN: TxDOT	CK: TxDOT	DW: TxDOT	CK: TxDOT
©TxDOT February 2020	CONT	SECT	JOB	HIGHWAY
REVISIONS	DIST		COUNTY	SHEET NO.

TABLE OF VARIABLE DIMENSIONS AND QUANTITIES FOR ONE HEADWALL (5)

Slope	Dia of Pipe (D)	Values for One Pipe: W	X	Y	L	Reinf (Lbs)	Conc (CY) (1)	Values to be Added for Each Add'l Pipe: X and W	Reinf (Lbs)	Conc (CY) (1)
2:1	12"	4' - 7 ½"	2' - 6"	2' - 10"	3' - 3 ½"	88	0.6	1' - 9"	20	0.2
	15"	5' - 5 ½"	2' - 9 ½"	3' - 4"	3' - 10 ½"	103	0.7	2' - 2"	24	0.3
	18"	6' - 4 ½"	3' - 1"	3' - 10"	4' - 5"	124	0.9	2' - 6"	32	0.3
	21"	7' - 2 ½"	3' - 4 ½"	4' - 4"	5' - 0"	143	1.1	3' - 1"	43	0.4
	24"	8' - 2 ½"	3' - 9 ½"	4' - 10"	5' - 7"	164	1.3	3' - 7"	50	0.5
	27"	9' - 1"	4' - 1"	5' - 4"	6' - 2"	179	1.5	3' - 11"	56	0.6
	30"	9' - 11 ½"	4' - 4 ½"	5' - 10"	6' - 8 ½"	203	1.7	4' - 4"	65	0.8
	33"	10' - 10"	4' - 8"	6' - 4"	7' - 3 ½"	224	2.0	4' - 8"	71	0.9
	36"	11' - 8 ½"	4' - 11 ½"	6' - 10"	7' - 10 ½"	249	2.2	5' - 1"	81	1.0
	42"	13' - 5 ½"	5' - 6 ½"	7' - 10"	9' - 0 ½"	298	2.8	5' - 10"	97	1.3
	48"	15' - 9"	6' - 1 ½"	9' - 4"	10' - 9 ½"	360	3.8	6' - 7"	117	1.7
	54"	17' - 5 ½"	6' - 8 ½"	10' - 4"	11' - 11 ½"	427	4.5	7' - 6"	151	2.1
	60"	19' - 2 ½"	7' - 3 ½"	11' - 4"	13' - 1"	481	5.3	8' - 3"	174	2.5
	66"	20' - 11 ½"	7' - 10 ½"	12' - 4"	14' - 3"	544	6.2	8' - 9"	194	2.9
	72"	22' - 8 ½"	8' - 5 ½"	13' - 4"	15' - 4 ½"	601	7.1	9' - 4"	213	3.3
3:1	12"	6' - 3"	2' - 6"	4' - 3"	4' - 11"	118	0.8	1' - 9"	22	0.2
	15"	7' - 5"	2' - 9 ½"	5' - 0"	5' - 9 ½"	137	1.1	2' - 2"	28	0.3
	18"	8' - 6 ½"	3' - 1"	5' - 9"	6' - 7 ½"	170	1.3	2' - 8"	37	0.5
	21"	9' - 8 ½"	3' - 4 ½"	6' - 6"	7' - 6"	195	1.6	3' - 1"	48	0.6
	24"	11' - 0"	3' - 9 ½"	7' - 3"	8' - 4 ½"	227	2.0	3' - 7"	58	0.7
	27"	12' - 2"	4' - 1"	8' - 0"	9' - 2 ½"	251	2.3	3' - 11"	67	0.8
	30"	13' - 4"	4' - 4 ½"	8' - 9"	10' - 1 ½"	293	2.7	4' - 4"	77	1.0
	33"	14' - 5 ½"	4' - 8"	9' - 6"	10' - 11 ½"	318	3.1	4' - 8"	84	1.2
	36"	15' - 7 ½"	4' - 11 ½"	10' - 3"	11' - 10"	351	3.5	5' - 1"	96	1.4
	42"	17' - 11 ½"	5' - 6 ½"	11' - 9"	13' - 6 ½"	432	4.5	5' - 10"	119	1.7
	48"	21' - 1 ½"	6' - 1 ½"	13' - 0"	16' - 2"	537	6.1	6' - 7"	146	2.3
	54"	23' - 5 ½"	6' - 8 ½"	15' - 6"	17' - 10 ½"	630	7.3	7' - 6"	186	2.9
	60"	25' - 9 ½"	7' - 3 ½"	17' - 0"	19' - 7 ½"	719	8.7	8' - 3"	219	3.4
	66"	28' - 1"	7' - 10 ½"	18' - 6"	21' - 4 ½"	811	10.1	8' - 9"	242	3.9
	72"	30' - 4 ½"	8' - 5 ½"	20' - 0"	23' - 1 ½"	924	11.7	9' - 4"	272	4.4
4:1	12"	7' - 10 ½"	2' - 6"	5' - 8"	6' - 6 ½"	148	1.1	1' - 9"	24	0.3
	15"	9' - 4"	2' - 9 ½"	6' - 8"	7' - 8 ½"	181	1.5	2' - 2"	32	0.4
	18"	10' - 9 ½"	3' - 1"	7' - 8"	8' - 10 ½"	221	1.9	2' - 8"	42	0.5
	21"	12' - 2 ½"	3' - 4 ½"	8' - 8"	10' - 0"	260	2.3	3' - 1"	57	0.7
	24"	12' - 9 ½"	3' - 9 ½"	9' - 8"	11' - 2"	301	2.8	3' - 7"	67	0.9
	27"	15' - 3"	4' - 1"	10' - 8"	12' - 3 ½"	334	3.3	3' - 11"	77	1.0
	30"	16' - 8 ½"	4' - 4 ½"	11' - 8"	13' - 5 ½"	385	3.8	4' - 4"	89	1.3
	33"	18' - 1 ½"	4' - 8"	12' - 8"	14' - 7 ½"	425	4.5	4' - 8"	101	1.4
	36"	19' - 7"	4' - 11 ½"	13' - 8"	15' - 9 ½"	472	5.1	5' - 1"	115	1.7
	42"	22' - 5 ½"	5' - 6 ½"	15' - 8"	18' - 1"	583	6.5	5' - 10"	141	2.1
	48"	26' - 6 ½"	6' - 1 ½"	18' - 8"	21' - 6 ½"	730	8.9	6' - 7"	175	2.8
	54"	29' - 5"	6' - 8 ½"	20' - 8"	23' - 10 ½"	875	10.7	7' - 6"	226	3.6
	60"	32' - 3 ½"	7' - 3 ½"	22' - 8"	26' - 2"	996	12.7	8' - 3"	264	4.3
	66"	35' - 2 ½"	7' - 10 ½"	24' - 8"	28' - 5 ½"	1,140	14.9	8' - 9"	300	4.9
	72"	38' - 1 ½"	8' - 5 ½"	26' - 8"	30' - 9 ½"	1,297	17.3	9' - 4"	334	5.6
6:1	12"	11' - 2"	2' - 6"	8' - 6"	9' - 9 ½"	224	1.9	1' - 9"	28	0.4
	15"	13' - 2 ½"	2' - 9 ½"	10' - 0"	11' - 6 ½"	268	2.5	2' - 2"	37	0.5
	18"	15' - 2 ½"	3' - 1"	11' - 6"	13' - 2 ½"	330	3.2	2' - 8"	50	0.7
	21"	17' - 2 ½"	3' - 4 ½"	13' - 0"	15' - 0 ½"	387	3.9	3' - 1"	69	0.9
	24"	19' - 4 ½"	3' - 9 ½"	14' - 6"	16' - 9"	453	4.8	3' - 7"	80	1.2
	27"	21' - 4 ½"	4' - 1"	16' - 0"	18' - 5 ½"	512	5.7	3' - 11"	96	1.4
	30"	23' - 5 ½"	4' - 4 ½"	17' - 6"	20' - 2 ½"	593	6.7	4' - 4"	110	1.7
	33"	25' - 5 ½"	4' - 8"	19' - 0"	21' - 11 ½"	675	7.8	4' - 8"	127	2.0
	36"	27' - 5 ½"	4' - 11 ½"	20' - 6"	23' - 8"	735	9.0	5' - 1"	144	2.3
	42"	31' - 6 ½"	5' - 6 ½"	23' - 6"	27' - 1 ½"	922	11.5	5' - 10"	179	3.0
	48"	37' - 3 ½"	6' - 1 ½"	28' - 0"	32' - 4"	1,191	15.9	6' - 7"	231	4.0
	54"	41' - 4 ½"	6' - 8 ½"	31' - 0"	35' - 9 ½"	1,424	19.2	7' - 6"	300	5.0
	60"	45' - 4 ½"	7' - 3 ½"	34' - 0"	39' - 3"	1,631	22.9	8' - 3"	353	6.0

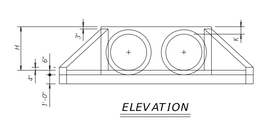

ELEVATION
(Showing dimensions.)

BARS V

BARS CL
(Length = 2'-5")

TABLE OF REINFORCING STEEL (5)

Bar	Size	Spa	No.
A	#4	1' - 0"	~
B	#3	1' - 6"	~
C	#4	1' - 0"	~
D	#3	1' - 0"	~
E	#5	~	4
F	#5	~	~
G	#3	~	2
S	#4	~	6
V	#4	1' - 0"	~
W	#5	~	4

TABLE OF CONSTANT DIMENSIONS

Dia of Pipe (D)	G	K (4)	H
12"	0' - 9"	1' - 0"	2' - 0"
15"	0' - 11"	1' - 0"	2' - 3"
18"	1' - 2"	1' - 0"	2' - 6"
21"	1' - 4"	1' - 0"	2' - 9"
24"	1' - 7"	1' - 0"	3' - 0"
27"	1' - 8"	1' - 0"	3' - 3"
30"	1' - 10"	1' - 0"	3' - 6"
33"	1' - 11"	1' - 0"	3' - 9"
36"	2' - 1"	1' - 0"	4' - 0"
42"	2' - 4"	1' - 0"	4' - 6"
48"	2' - 7"	1' - 3"	5' - 3"
54"	3' - 0"	1' - 3"	5' - 9"
60"	3' - 3"	1' - 3"	6' - 3"
66"	3' - 3"	1' - 3"	6' - 9"
72"	3' - 4"	1' - 3"	7' - 3"

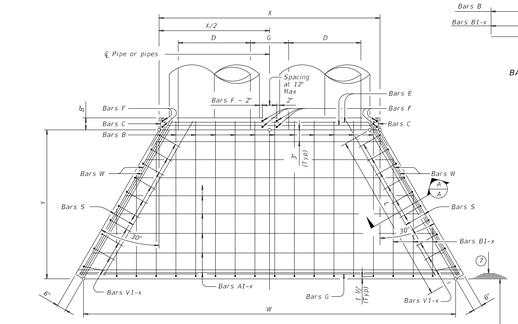

PLAN

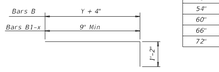

BARS B and B1-x

(1) Quantities shown are for concrete pipe and will increase slightly for metal pipe installations.

(2) For vehicle safety, construct curbs no more than 3" above finished grade. Reduce curb heights, if necessary, to meet these requirements. No changes will be made in quantities and no additional compensation will be allowed for this work.

(3) Provide a 1'-0" footing as shown where required to maintain 4" minimum cover for pipes.

(4) Dimensions shown are usual and maximum.

(5) Quantities shown are for one structure end only (one headwall).

(6) Min Length = 6' + 3' x $\left(\frac{12 \times H - 7}{12 \times L}\right)$

Max Length = 12 x H + 3' x $\left(\frac{12 \times H - 7}{12 \times L}\right)$ - 1'

(7) Lengths of wings based on SL:1 slope along this line.

MATERIAL NOTES:

Provide Grade 60 reinforcing steel.
Provide Class C concrete (f'c = 3,600 psi).

GENERAL NOTES:

Designed according to AASHTO LRFD Bridge Design Specifications.
Do not mount bridge rails of any type directly to these culvert headwalls.
This standard may not be used for wall heights, H, exceeding the values shown.

Cover dimensions are clear dimensions, unless noted otherwise. Reinforcing dimensions are out-to-out of bars.

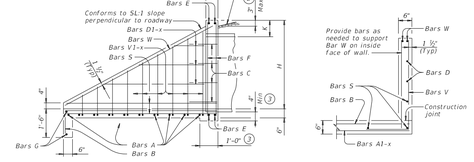

TYPICAL WING ELEVATION

SECTION A-A

Texas Department of Transportation | Bridge Division Standard

CONCRETE HEADWALLS
WITH FLARED WINGS FOR
0° SKEW PIPE CULVERTS

CH-FW-0

FILE: chfw00a-20.dgn	DN: TxDOT	CK: TxDOT	DW: TxDOT	CK: TxDOT
©TxDOT February 2020	CONT	SECT	JOB	HIGHWAY
REVISIONS	DIST		COUNTY	SHEET NO.

REQUIREMENTS FOR CULVERT PIPES AND SAFETY PIPE RUNNERS

Pipe I.D.	RCP Wall "B" Thickness	TP Wall Thickness (8)	"D" (1)	Slope	Min Length of Unit	Single Pipe: Skew	Single Pipe: Pipe Runners Required	Multiple Pipes: Skew	Multiple Pipes: Pipe Runners Required
12"	2"	1.15"	17.00"	3:1	2' - 11"	≤ 45°	No	≤ 45°	No
				4:1	3' - 6"				
				6:1	4' - 9"				
15"	2 ¼"	1.30"	20.50"	3:1	3' - 8"	≤ 45°	No	≤ 45°	No
				4:1	4' - 7"				
				6:1	6' - 5"				
18"	2 ½"	1.60"	24.00"	3:1	4' - 6"	≤ 45°	No	≤ 45°	No
				4:1	5' - 8"				
				6:1	8' - 0"				
24"	3"	1.95"	31.00"	3:1	6' - 2"	≤ 45°	No	= 30°	No
				4:1	7' - 10"			> 30°	Yes
				6:1	11' - 3"				
30"	3 ½"	2.65"	38.50"	3:1	7' - 10"	= 15°	No	= 15°	No
				4:1	10' - 1"	> 15°	Yes	> 15°	Yes
				6:1	14' - 8"				
36"	4"	2.75"	45.50"	3:1	9' - 5"	= 0°	No	≥ 0°	Yes
				4:1	12' - 3"	> 0°	Yes		
				6:1	17' - 11"				
42"	4 ½"	N/A	52.50"	3:1	11' - 1"	≥ 0°	Yes	≥ 0°	Yes
				4:1	14' - 5"				
				6:1	21' - 2"				

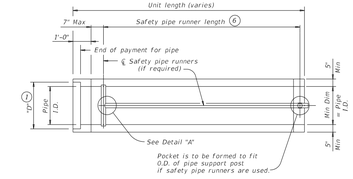

PLAN
(Showing bell end connection.)

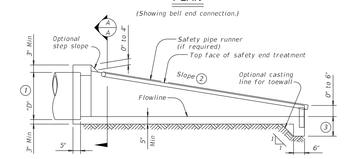

LONGITUDINAL ELEVATION
(Showing bell end connection.)

(1) Dimension "D" is based on reinforced concrete pipe (RCP) meeting the requirements of ASTM C-76, Class III, (RCP Wall "B" thickness). Adjust "D" for any other wall thickness used. For thermoplastic pipe (TP) take into account the annular space requirements for grouted connections.

(2) Slope as shown elsewhere in plans. Slope of 3:1 or flatter is required for vehicle safety.

(3) Toewall to be used only when dimension is shown elsewhere in the plans.

(4) Fill the top 4" of void between precast end treatments with concrete riprap. Concrete riprap is considered subsidiary to the Item 467, "Safety End Treatment".

(5) Adjust clear distance between pipes to provide for the minimum distance between safety end treatments.

(6) Measured along slope.

(7) Provide cement stabilized bedding and backfill in accordance with the Item 400, "Excavation and Backfill for Structures". Bedding and backfill is considered subsidiary to the Item 467, "Safety End Treatment". When concrete riprap is specified around the safety end treatment, backfill as directed by Engineer.

(8) Thermoplastic pipe wall thickness may vary. Adjust accordingly. Thermoplastic pipe requires the safety end treatments to have a bell end for grouted connections.

SAFETY PIPE RUNNER DIMENSIONS

Max Safety Pipe Runner Length	Required Pipe Runner Size: Pipe Size	Pipe O.D.	Pipe I.D.
11' - 2"	3" STD	3.500"	3.068"
15' - 6"	3 ½" STD	4.000"	3.548"
20' - 10"	4" STD	4.500"	4.026"
35' - 4"	5" STD	5.563"	5.047"

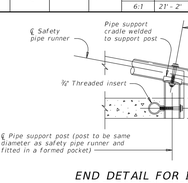

END DETAIL FOR INSTALLATION OF SAFETY PIPE RUNNERS
(If required)

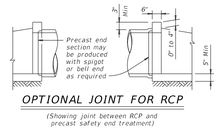

OPTIONAL JOINT FOR RCP
(Showing joint between RCP and precast safety end treatment)

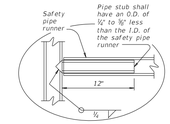

OPTION A

DETAIL A
(If required)

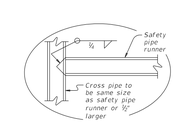

OPTION B

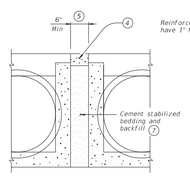

MULTIPLE PIPE INSTALLATION

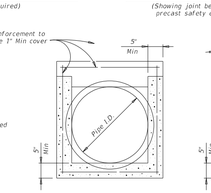

OPTION WITH SQUARE BOTTOM

SECTION A-A

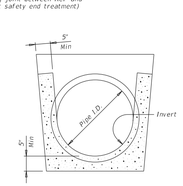

OPTION WITH INVERT BOTTOM

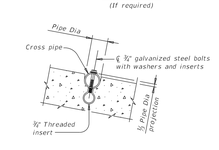

INSTALLATION DETAIL FOR SAFETY PIPE RUNNERS
(If required)

GENERAL NOTES:

Precast safety end treatment for reinforced concrete pipe (RCP), and thermoplastic pipe (TP) may be used for TYPE II end treatment as specified in Item "Safety End Treatment".

When precast safety end treatment is used as a Contractor's alternate to mitered RCP, riprap will not be required unless noted otherwise on the plans.

Synthetic fibers listed on the "Fibers for Concrete" Material Producer List (MPL) may be used in lieu of steel reinforcing in riprap concrete unless noted otherwise.

Manufacture this product in accordance with Item 467, "Safety End Treatment" except as noted below :

A. Provide minimum reinforcing of #4 at 6" (Grade 40) or #4 at 9" (Grade 60) each way or 6"x6" - D12 x D12 or 5"x5" - D10 x D10 welded wire reinforcement (WWR).
B. For precast (steel formed) sections, provide Class "C" concrete (f'c = 3,600 psi).

At the option and expense of the Contractor, the next larger size of safety end treatment may be furnished as long as the "D" dimension cast is that of the required size of pipe.

Pipe runners are designed for a traversing load of 1,800 Lbs at yield as recommended by Research Report 280-1, "Safety Treatment of Roadside Cross-Drainage Structures", Texas Transportation Institute, March 1981.

Provide safety pipe runners, cross pipes, pipe support posts, and pipe stubs meeting the requirements of ASTM A53 (Type E or S, Grade B), ASTM A500 (Grade B), or API 5L/X52.

Galvanize all steel components except reinforcing steel after fabrication. Repair galvanizing damaged during transport or construction in accordance with the specifications.

Connect RCP using the Optional Joint for RCP detail shown or in accordance with Item 464 "Reinforced Concrete Pipe". Connect TP by grouting. See PBGC standard for grouted connections with TP and precast safety end treatment.

Texas Department of Transportation | Bridge Division Standard

PRECAST SAFETY END TREATMENT
TYPE II ~ CROSS DRAINAGE

PSET-SC

FILE: psetscss-20.dgn	DN: RLW	CK: KLR	DW: JTR	CK: GAF
©TxDOT February 2020	CONT	SECT	JOB	HIGHWAY
REVISIONS	DIST		COUNTY	SHEET NO.

GENERATED OK

Texas Department of Transportation
COPYRIGHT © 2021

LTRA
3320 Belt Line Rd
Farmers Branch, Texas 75234
LINA T. RAMEY & ASSOCIATES, INC.
Firm Registration No. F-782

STATE OF TEXAS
EVELYN N. LEE
110063
LICENSED
PROFESSIONAL ENGINEER
4/21/2021

DISTRICT (18)
COLLIN COUNTY
McKinney Area Engineering and Maintenance Facility
2205 TX-5, McKinney, TX 75069
PROJECT NO. 18-470420012

ISSUED: 2021.04.21
DRAWN BY: VM
REVISIONS:

#	DATE	INITIALS

CIVIL DETAILS
C7.4

THIS DRAWING CREATED FOR PRODUCTION ON 22"x34" SHEET SIZE. DO NOT SCALE PRINTS.

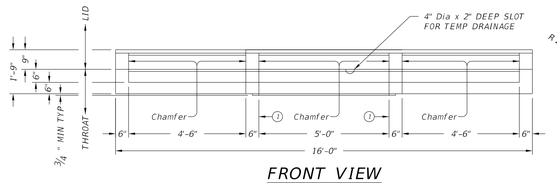

FRONT VIEW
(SHOWING LEFT AND RIGHT EXTENSIONS)

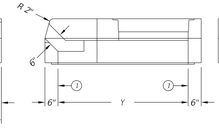

RIGHT VIEW

REAR VIEW
(EXTENSIONS NOT SHOWN)

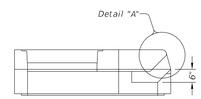

LEFT VIEW

1 Matches inside face of wall of precast base or riser below inlet.

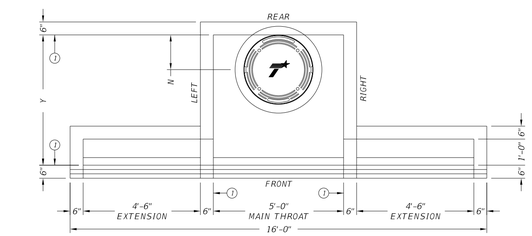

PLAN VIEW
(SHOWING LEFT AND RIGHT EXTENSIONS)

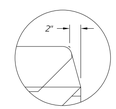

DETAIL "A"

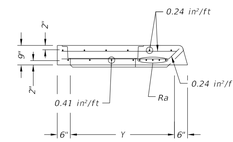

LID SECTION A-A

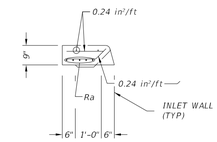

LID SECTION B-B

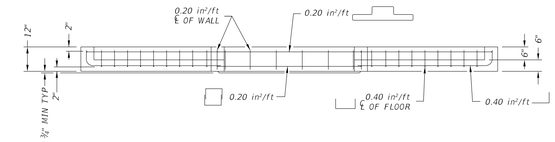

THROAT ELEVATION VIEW
(SHOWING LEFT AND RIGHT EXTENSIONS)

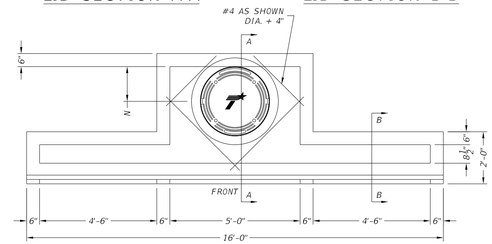

LID PLAN VIEW
(SHOWING LEFT AND RIGHT EXTENSIONS)

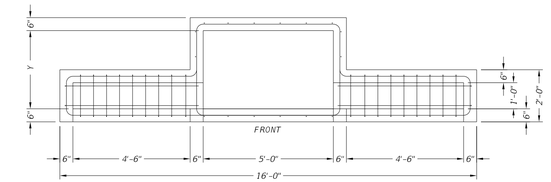

THROAT PLAN VIEW
(SHOWING LEFT AND RIGHT EXTENSIONS)

SIZE (Y)	N	MH DIA*	Ra
3'	9"	18"	(4) #5 Additional
4'	16"	32"	(4) #5 Additional
5'	16"	32"	(4) #5 Additional
6'	16"	32"	(4) #5 Additional

* Nominal ring and cover size.

FABRICATION NOTES:
1. Provide Class "H" concrete in accordance with Item 421 and having a minimum compressive strength of 5,000 psi.
2. Provide Grade 60 reinforcing steel or equivalent area of WWR.
3. Extensions may be right, left, both or none. Provide extensions as specified elsewhere in the plans.
4. Design tongue and groove joints for full closure on both shoulders. Minimum spigot depth is ½".
   Lid may employ a butt joint with dowels at the Contractor's option.
5. Provide lifting devices in conformance with Manufacturer's recommendations.
6. Provide cast iron solid cover, unless noted otherwise elsewhere in the plans.
7. Chamfer vertical edges of inlet lid ¾" as shown in Front View, sheet 1.

INSTALLATION NOTES:
1. Inlet throat and lid are not intended for direct traffic. Do not place in roadway.
2. Seal tongue and groove joints and butt joints with preformed or bulk mastic in conformance with Manufacturer's recommendations. Tongue and groove joints may be graded no more than 1" between each section, or ½ the joint depth, whichever is greater.
3. Do not grout rubber gasket joints without Manufacturer's recommendation.

GENERAL NOTES:
1. Designed according to ASTM C913.
2. Open area of main throat = 360 sq in. Open area of one extension throat = 324 sq in.
3. Payment for inlet is per Item 465, "Junction Boxes, Manholes, and Inlets" by type, size, and extension placement. Extensions are subsidiary to inlet.

Cover dimensions are clear dimensions, unless noted otherwise.

HS20 LOADING — SHEET 1 OF 2

Texas Department of Transportation — Bridge Division Standard

PRECAST CURB INLET OUTSIDE ROADWAY

PCO

FILE: prestd03-20.dgn	DN: TxDOT	CK: TxDOT	DW: TxDOT	CK: TxDOT
©TxDOT February 2020	CONT	SECT	JOB	HIGHWAY
REVISIONS	DIST		COUNTY	SHEET NO.

HS20 LOADING — SHEET 2 OF 2

Texas Department of Transportation — Bridge Division Standard

PRECAST CURB INLET OUTSIDE ROADWAY

PCO

FILE: prestd03-20.dgn	DN: TxDOT	CK: TxDOT	DW: TxDOT	CK: TxDOT
©TxDOT February 2020	CONT	SECT	JOB	HIGHWAY
REVISIONS	DIST		COUNTY	SHEET NO.

1 CIVIL DETAILS 5

GENERATED ON:

Texas Department of Transportation
COPYRIGHT © 2021

LTRA
3320 Belt Line Rd
Farmers Branch, Texas 75234

LINA T. RAMEY & ASSOCIATES, INC.
Firm Registration No. F-782

STATE OF TEXAS
EVELYN M. LEE
110063
LICENSED
PROFESSIONAL ENGINEER
4/21/2021

DISTRICT (18)
COLLIN COUNTY
McKinney Area Engineering and Maintenance Facility
2205 TX-5, McKinney, TX 75069
PROJECT NO. 18-470420012

ISSUED: 2021.04.21
DRAWN BY: VM
REVISIONS:

#	DATE	INITIALS

CIVIL DETAILS
C7.5

THIS DRAWING CREATED FOR PRODUCTION ON 22"x34" SHEET SIZE. DO NOT SCALE PRINTS.

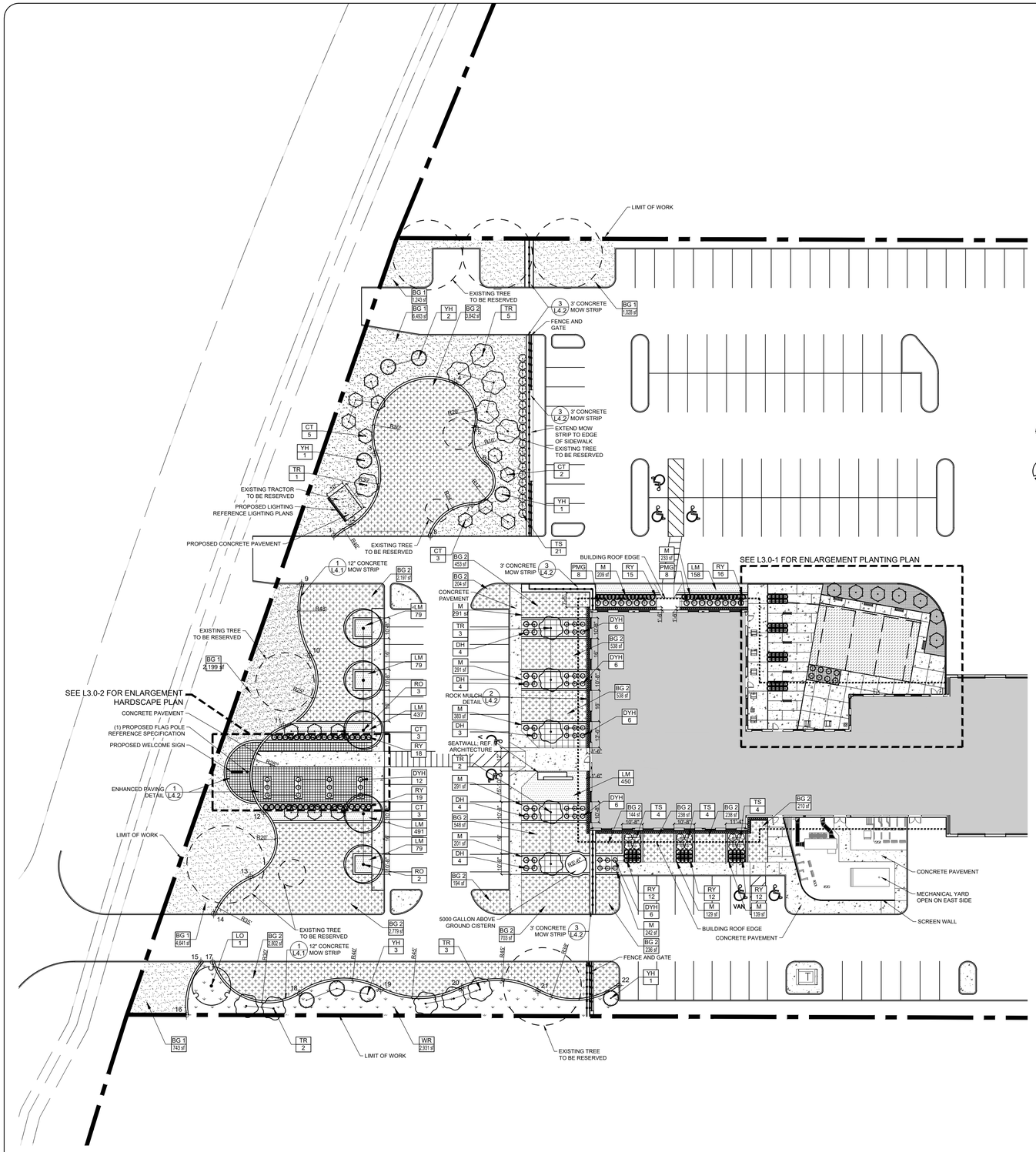

1 PLANTING PLAN
1" = 30'-0"

PLANTING NOTES

1. ALL NEW PLANT MATERIAL SHALL CONFORM TO THE MINIMUM GUIDELINES ESTABLISHED FOR NURSERY STOCK PUBLISHED BY THE AMERICAN ASSOCIATION OF NURSERYMAN, INC.

2. ALL AREAS DISTURBED DUE TO CONSTRUCTION ACTIVITIES TO BE RE-VEGETATED. REPAIR AREAS TO RECEIVE TEMPORARY IRRIGATION UNTIL VEGETATION IS ESTABLISHED UNLESS OTHERWISE DIRECTED BY OWNER.

3. THE GENERAL CONTRACTOR SHALL SUPPLY ALL NEW PLANT MATERIAL IN QUANTITIES SUFFICIENT TO COMPLETE THE PLANTINGS SHOWN ON THE DRAWINGS.

4. STAKE LOCATION OF ALL PROPOSED PLANTING FOR APPROVAL BY THE OWNER'S REPRESENTATIVE PRIOR TO THE COMMENCEMENT OF PLANTING.

5. PLANT QUANTITIES ARE TO BE AN AID TO THE BIDDER. BIDDER'S ARE RESPONSIBLE FOR VERIFYING ALL QUANTITIES. PLANTING PLAN QUANTITIES SHALL SUPERSEDE PLANT SCHEDULE QUANTITIES.

6. ANY DISTURBED AREAS OUT SIDE OF THE LIMIT OF WORK SHALL HAVE SOD AT NO ADDITIONAL COST TO THE OWNER.

7. CONTRACTOR SHALL PROVIDE FULL COVERAGE IRRIGATION TO MATCH EXISTING SYSTEM. DRIP IRRIGATION IS USED FOR SHRUB AND GROUNDCOVER AREAS AND LOW FLOW ROTATORS ARE USED FOR FOR LAWN AREA.

8. REF. L4.1 FOR PLANTING DETAILS

9. STAKE LOCATION OF ALL PROPOSED PLANTING BEDS FOR APPROVAL BY THE ARCHITECT PRIOR TO THE COMMENCEMENT OF MOW STRIP CONSTRUCTION. THE BEDS SHALL ALIGN WITH THE FINAL INSTALLED WINDOW LOCATIONS .

KEY PLAN

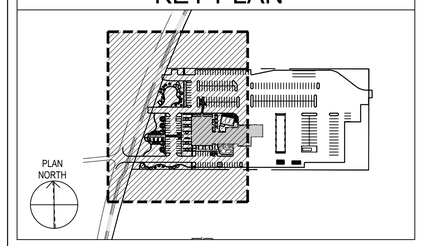

SCALES

1"= 30' 0 10' 30' 50'

PLANT SCHEDULE TOTAL

TREES	CODE	QTY	COMMON NAME	BOTANICAL NAME	SIZE	CONDITION	SIZE	SPACING	REMARKS
	TR	16	TEXAS REDBUD	CERCIS CANADENSIS TEXENSIS	30 GAL	2"CAL	6'-8' HT.		CONTAINER GROWN, SINGLE TRUNK
	YH	8	YAUPON HOLLY	ILEX VOMITORIA	30 GAL	2"CAL	6'-8' HT.		
	RO	5	SHUMARD RED OAK	QUERCUS SHUMARDII	45 GAL	3"CAL	12'-15' HT.		
	LO	1	SOUTHERN LIVE OAK	QUERCUS VIRGINIANA	45 GAL	3"CAL	12'-15' HT.		
	CT	23	CHASTE TREE	VITEX AGNUS-CASTUS	15 GAL	2"CAL	4'-6' HT		

SHRUBS	CODE	QTY	COMMON NAME	BOTANICAL NAME	SIZE	CONDITION	SPRD	SPACING	REMARKS
	DH	19	WRIGHT`S DESERT HONEYSUCKLE	ANISACANTHUS QUADRIFIDUS WRIGHTII	3 GAL	18" MIN.	24"-36"	36"	
	RY	144	RED YUCCA	HESPERALOE PARVIFLORA	3 GAL	15" HT	15"	30"	
	DYH	42	DWARF YAUPON HOLLY	ILEX VOMITORIA `NANA`	3 GAL	15" HT	14" MIN.	30"	
	TS	33	TEXAS SAGE	LEUCOPHYLLUM FRUTESCENS	5 GAL	24"-36"	24"-36"		
	PMG	24	PINK MUHLY GRASS	MUHLENBERGIA CAPILLARIS	3 GAL	24" MIN.	24"	36"	

GROUND COVERS	CODE	QTY	COMMON NAME	BOTANICAL NAME	SIZE	CONDITION	SPREAD	SPACING	SPACING	REMARKS
	BG 2	15,863 SF	BUFFALO GRASS	BOUTELOUA DACTYLOIDES	SOD					MOWED
	BG 1	22,841 SF	BERMUDA GRASS	CYNODON DACTYLON	SOD					
	LM	2,587 SF	LIRIOPE	LIRIOPE MUSCARI `BIG BLUE`	4"POT				12" o.c.	FULL PLANT
	WR	2,931 SF	WILDFLOWERS	NATIVE TEXAS SEED MIX	HYDROMULCH					AS PROVIDED BY NATIVE TEXAS NURSERIES
	ST	1,692 SF		SYNTHETIC TURF	-					

MULCH	CODE	QTY	COMMON NAME	BOTANICAL NAME	SIZE	CONDITION	SPREAD	SPACING	SPACING	REMARKS
	M	2,913 SF	MULCH	MULCH	MULCH					CONSIDERED SUBSIDIAIRY TO PLANTING. SEE GENERAL PLANTING NOTES SHEET

NOTE:

1. AREA OF BED PREP AND TOP SOIL: ±5482 SY
2. LENGTH OF 12" MOW STRIP: ±1525 LF
3. LENGTH OF 36" MOW STRIP: ±690 LF
4. LENGTH OF STEEL EDGING: ±272 LF

NORTHING/EASTING POINT SCHEDULE

POINT	DESCRIPTION	NORTHING	EASTING
1		N 7113271.33	E 2541370.86
2		N 7113277.13	E 2541379.65
3		N 7113313.65	E 2541391.89
4		N 7113350.29	E 2541432.94
5		N 7113326.86	E 2541443.97
6		N 7113308.66	E 2541449.21
7		N 7113287.19	E 2541441.90
8		N 7113271.33	E 2541420.52
9		N 7113246.33	E 2541354.27
10		N 7113209.51	E 2541358.35
11		N 7113173.39	E 2541344.95
12		N 7113128.96	E 2541334.67
13		N 7113095.88	E 2541327.82
14		N 7113076.83	E 2541309.00
15		N 7113051.83	E 2541302.43
16		N 7113024.74	E 2541294.98
17		N 7113051.83	E 2541308.46
18		N 7113035.65	E 2541353.27
19		N 7113037.80	E 2541394.97
20		N 7113038.55	E 2541436.44
21		N 7113036.93	E 2541475.83
22		N 7113039.88	E 2541517.46

Texas Department of Transportation

COPYRIGHT ©2021

Jacobs
1999 Bryan Street, Suite 1200
Dallas, Tx 75201

JACOBS ENGINEERING GROUP, INC
TEXAS REGISTRATION #2966

04.21.2021

DALLAS DISTRICT (18)
COLLIN COUNTY
McKinney Area Engineering and Maintenance Facility
2205 TX-5, McKinney, TX 75069
PROJECT NO. 18-47042001 2

ISSUED: 2021.04.21
DRAWN BY: CZ
REVISIONS: CZ

PLANTING PLAN

L1.0

THIS DRAWING CREATED FOR PRODUCTION ON 22"x34" SHEET SIZE. DO NOT SCALE PRINTS.

REFERENCE NOTES SCHEDULE AREA 1

SYMBOL	DESCRIPTION
2	METER, ISOLATION VALVE, WYE STRAINER, BACKFLOW PREVENTION DEVICE, AND MASTER VALVE SHOWN IN DIAGRAMMATIC FORM ONLY. ALL EQUIPMENT SHALL BE INSTALLED WITHIN PROPERTY LINE IN LANDSCAPE AREA.
4	CONTRACTOR TO TEMPORARILY IRRIGATE THIS AREA TO ESTABLISH TURF
5	(1) 4" SLEEVE FOR MAINLINE (1) 2" SLEEVE FOR VALVE WIRE
6	CISTERN; REF. L2.1 FOR DETAILS
7	INSTALL CONTROLLER INSIDE BUILDING. USE SLEEVE PROVIDED. REF. ELECTRICAL

NOTE:
1. ALL AREAS DISTURBED OUTSIDE OF PROPERTY LINE DUE TO CONSTRUCTION ACTIVITIES WHICH ARE RE-VEGETATED SHALL RECEIVE TEMPORARY IRRIGATION, IF NECESSARY, UNTIL VEGETATION IS ESTABLISHED, UNLESS OTHERWISE DIRECTED BY OWNER.

IRRIGATION PLAN IS SHOWN DIAGRAMMATICALLY INSTALL ALL PIPE AND IRRIGATION COMPONENTS WITHIN PROPERTY BOUNDARY IN LANDSCAPE AREA.

CISTERN SYSTEM SHALL REMAIN COMPLETELY INDEPENDANT OF POTABLE SOURCED IRRIGATION SYSTEM.

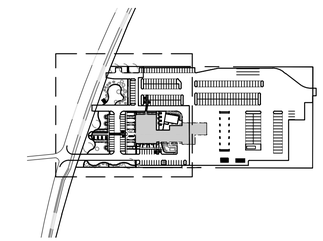

1"= 30' 0 10' 30' 50'

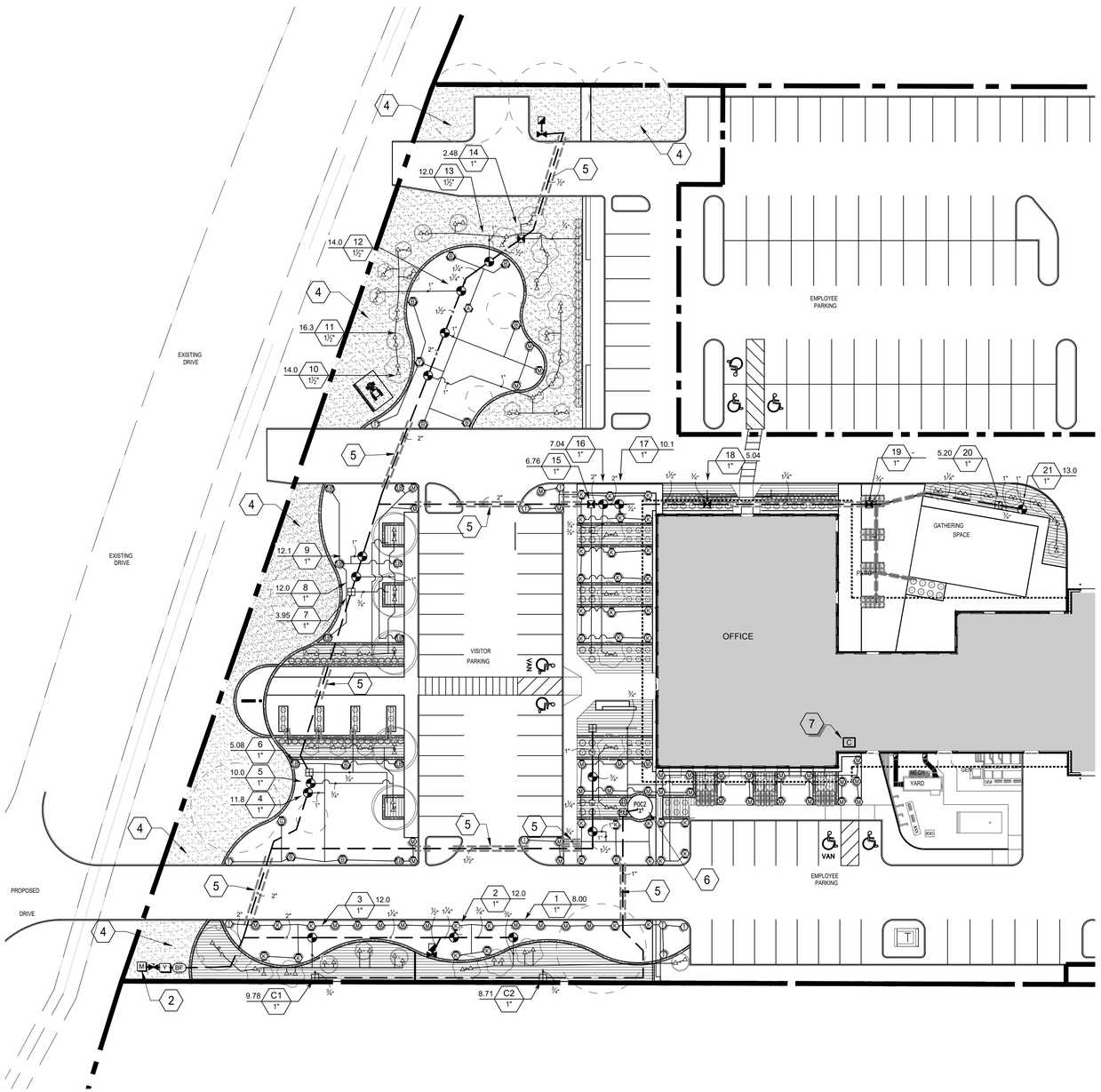

1 IRRIGATION PLAN
1" = 30'-0"

IRRIGATION SCHEDULE AREA 1

SYMBOL	MANUFACTURER/MODEL/DESCRIPTION	QTY	PSI
T	HUNTER MP CORNER PROS-06-PRS40-CV SHRUB ROTATOR, 6" POP-UP WITH FACTORY INSTALLED CHECK VALVE, PRESSURE REGULATED TO 40 PSI, MP ROTATOR NOZZLE. T=TURQUOISE ADJ ARC 45-105 ON PRS40 BODY.	9	40
M L O	HUNTER MP1000 PROS-06-PRS40-CV SHRUB ROTATOR, 6" POP-UP WITH CHECK VALVE, PRESSURE REGULATED TO 40 PSI, MP ROTATOR NOZZLE. M=MAROON ADJ ARC 90 TO 210, L=LIGHT BLUE 210 TO 270 ARC, O=OLIVE 360 ARC ON PRS40 BODY.	44	40
K G R	HUNTER MP2000 PROS-06-PRS40-CV SHRUB ROTATOR, 6" POP-UP WITH FACTORY INSTALLED CHECK VALVE, PRESSURE REGULATED TO 40 PSI, MP ROTATOR NOZZLE. K=BLACK ADJ ARC 90-210, G=GREEN ADJ ARC 210-270, R=RED 360 ARC ON PRS40 BODY.	39	40
B Y A	HUNTER MP3000 PROS-06-PRS40-CV SHRUB ROTATOR, 6" POP-UP WITH FACTORY INSTALLED CHECK VALVE, PRESSURE REGULATED TO 40 PSI, MP ROTATOR NOZZLE. B=BLUE ADJ ARC 90-210, Y=YELLOW ADJ ARC 210-270, A=GRAY 360 ARC ON PRS40 BODY.	11	40
LB	HUNTER MP3500 PROS-06-PRS40-CV SHRUB ROTATOR, 6.0" POP-UP WITH FACTORY INSTALLED CHECK VALVE, PRESSURE REGULATED TO 40 PSI, MP ROTATOR NOZZLE. LB=LIGHT BROWN, ADJUSTABLE ARC, 90-210, ON PRS40 BODY.	9	40
25 50 10 20	HUNTER PCB 10 FLOOD BUBBLER, 1/2" FIPT.	106	30
SYMBOL	MANUFACTURER/MODEL/DESCRIPTION	QTY	
	NETAFIM LFCZ10075-HF 1" VALVE, 3/4" FILTER AND A HIGH FLOW PRESSURE REGULATING VALVE (3.5 - 17.6GPM).	6	
	NETAFIM LVCZ10075-LF 1" VALVE, 3/4" FILTER AND A LOW FLOW PRESSURE REGULATING VALVE (0.25 - 4.4GPM).	4	
	AREA TO RECEIVE DRIPLINE NETAFIM 08WRAM-04-12 (12) BIOLINE PRESSURE COMPENSATING LANDSCAPE DRIPLINE W/PURPLE COLOR TUBING FOR NON-POTABLE WATER APPLICATIONS. 0.4GPH EMITTERS AT 12.0" O.C. DRIPLINE LATERALS SPACED AT 12.0" APART, WITH EMITTERS OFFSET FOR TRIANGULAR PATTERN. RECLAIMED WATER USE ONLY.	8,167 S.F.	
SYMBOL	MANUFACTURER/MODEL/DESCRIPTION	QTY	
	HUNTER ICV-AS ELECTRIC REMOTE CONTROL VALVE, 220 PSI RATED PLASTIC GLOBE VALVE, ACCU-SET PRESSURE REGULATOR.	16	
	HUNTER HQ-33DLRC-R QUICK COUPLER VALVE, PURPLE LOCKING RUBBER COVER FOR RECLAIMED WATER USE, RED BRASS AND STAINLESS STEEL, WITH 3/4" NPT INLET, 2-PIECE BODY.	2	
	NIBCO T-580-S6-R-66-LL STAINLESS STEEL BALL VALVE SHUT OFF VALVE	3	
BF	ZURN 950XL 1-1/2" DOUBLE CHECK VALVE ASSEMBLY	1	
C	HUNTER A2C-3000-SS 30-STATION CONTROLLER WITH THREE (3) A2M-600 MODULES IN AN OUTDOOR STAINLESS STEEL WALL MOUNT ENCLOSURE.	1	
SS	HUNTER SOLAR-SYNC-SEN SOLAR, RAIN FREEZE SENSOR WITH OUTDOOR INTERFACE, CONNECTS TO HUNTER X-CORE AND ACC CONTROLLERS, INSTALL AS NOTED. INCLUDES GUTTER MOUNT BRACKET. WIRED. MODULE NOT INCLUDED.	1	
PU	3/4 HP PUMP 3/4 HP FLOODED SUCTION PUMP PROVIDED 10 GPM 30 PSI BOOST	1	
Y	WILKENS Y-STRAINER - SAME SIZE AS PIPE	1	
M	WATER METER 2" IRRIGATION CONTRACTOR SHALL COORDINATE NEW IRRIGATION METER INSTALLATION WITH THE CITY. FLOW AND PRESSURE IS ASSUMED FOR PRELIMINARY DESIGN. FIELD VERIFY.	1	
POC2	5000 GALLON CISTERN WITH 1-HP PUMP	1	
	IRRIGATION LATERAL LINE: PVC CLASS 200 SDR 21	3,473 L.F.	
	IRRIGATION MAINLINE: PVC SCHEDULE 40	1,317 L.F.	
	PIPE SLEEVE: PVC SCHEDULE 40	352.0 L.F.	

Valve Callout
Valve Number
Valve Flow
Valve Size

IRRIGATION NOTES

1. IRRIGATION PLAN IS SCHEMATIC. ALL PIPING HEADS,VALVES, ETC, SHALL BE LOCATED AS SHOWN ON THE DETAILS. REPORT ANY DISCREPANCIES BETWEEN ACTUAL AND PROPOSED SITE CONDITIONS TO THE OWNER'S REPRESENTATIVE. DO NOT PROCEED WITH WORK UNTIL SAID DISCREPANCIES ARE RESOLVED.
2. VERIFY THAT THE WORK OF OTHER CONTRACTORS/TRADES IS SUFFICIENTLY COMPLETE TO ALLOW COMMENCEMENT OF IRRIGATION INSTALLATION PRIOR TO BEGINNING WORK. CONTRACTOR SHALL COORDINATE INSTALLATION OF ALL IRRIGATION SLEEVES UNDER PAVEMENT WITH OTHER CONTRACTORS.
3. EXISTING TREES, SHRUBS AND ALL OTHER PLANTINGS SHALL BE PROTECTED DURING CONSTRUCTION.
4. EXPENSE FOR ADDITIONAL MATERIALS, LABOR, ETC. ABOVE AND BEYOND THE CURRENT CONTRACT SHALL BE ADDRESSED THROUGH A WRITTEN CHANGE ORDER, SUPPLIED BY THE CONTRACTOR, AND APPROVED BY THE OWNER AND LANDSCAPE ARCHITECT PRIOR TO THE START OF SUCH WORK.
5. AUTOMATIC CONTROLLER SHALL BE INSTALLED AT LOCATION SHOWN. POWER (120V) SHALL BE LOCATED IN A JUNCTION BOX WITHIN FIVE (5') FEET OF CONTROLLER LOCATION BY OTHER TRADES.
6. ALL SLEEVES TO BE SCHEDULE 40 PVC. SLEEVES SHALL BE INSTALLED WHEREVER PIPES RUN UNDER PAVEMENT. SLEEVES MUST BE 2 SIZES LARGER THAN THE SUM OF ALL PIPES INSIDE SLEEVE.
7. TEN DAYS PRIOR TO START OF CONSTRUCTION, LANDSCAPE OR IRRIGATION CONTRACTOR SHALL VERIFY STATIC WATER PRESSURE. IF STATIC PRESSURE IS LESS THAN 60 P.S.I., DO NOT WORK UNTIL NOTIFIED TO DO SO BY OWNER.
8. CONTRACTOR TO VERIFY STATIC WATER PRESSURE IS SUFFICIENT TO PROPERLY OPERATE ZONES.
9. ALL MAIN LINE SHALL REMAIN OUTSIDE OF CITY RIGHT-OF WAY (R.O.W).
10. THE IRRIGATION CONTRACTOR SHALL COORDINATE INSTALLATION OF THE SYSTEM WITH THE LANDSCAPE CONTRACTOR SO THAT ALL PLANT MATERIAL WILL BE WATERED IN ACCORDANCE WITH THE INTENT OF THE PLANS AND SPECIFICATIONS.
11. IRRIGATION SYSTEM INSTALLATION TO BE PERFORMED IN ACCORDANCE WITH ALL PERTINENT CODES AND ORDINANCES.
12. NO PVC PIPING SHALL BE LOCATED UNDER TREE ROOT BALLS.
13. NO MACHINE TRENCHING IS TO BE DONE WITHIN DRIPLINE OF EXISTING PRESERVED TREES. TRENCHING IS TO BE DONE BY HAND OR BY TUNNELING UNDER ROOT SYSTEM BY METHOD APPROVED BY OWNER'S REPRESENTATIVE.
14. PIPING LAYOUT IS DIAGRAMMATIC. IT SHALL BE ROUTED AROUND EXISTING PLANT MATERIAL TO AVOID DAMAGE TO EXISTING PLANTS/TREES. DO NOT CUT ANY ROOT OVER 3/4" DIAMETER. ANY CUTS MADE SHALL BE CLEAN AND WITHOUT FRAYED ENDS.
15. FOLLOW ALL T.C.E.Q. RULES AND REGULATIONS FOR LANDSCAPE IRRIGATORS. FOLLOW ALL CITY ORDINANCES.

SLEEVING NOTES

1. CONTRACTOR SHALL LAY SLEEVES AND CONDUITS AT TWENTY-FOUR (24") INCHES BELOW FINISH GRADE OF THE TOP OF PAVEMENT.
2. CONTRACTOR SHALL EXTEND SLEEVES ONE (1') FOOT BEYOND EDGE OF ALL PAVEMENT.
3. CONTRACTOR SHALL CAP PIPE ENDS USING PVC CAPS.
4. ALL SLEEVES SHALL BE SCHEDULE 40 PVC PIPE.
5. CONTRACTOR SHALL FURNISH OWNER AND IRRIGATION CONTRACTOR WITH AN "AS-BUILT" DRAWING SHOWING ALL SLEEVE LOCATIONS.
6. CONTRACTOR MAY CONSOLIDATE PARALLEL PIPE RUNS IN FEWER LARGER SLEEVES UP TO (3) PIPES MAXIMUM IN (1) SLEEVE. SIZE OF SLEEVE SHALL BE (2) TIMES THE SUM OF ALL PIPES CONTAINED WITHIN SLEEVE.

Irrigation in Texas is regulated by the Texas Commission on Environmental Quality (TCEQ)(MC-178),
P.O. Box 13087, Austin, Texas 78711-3087

Texas Department of Transportation
COPYRIGHT ©2021

Jacobs
1999 Bryan Street, Suite 1200
Dallas, Tx 75201
JACOBS ENGINEERING GROUP, INC
TEXAS REGISTRATION #2966

STATE OF TEXAS
JACOB W. BAKER
16275
LICENSED IRRIGATOR
04.21.2021

DALLAS DISTRICT (18)
COLLIN COUNTY
McKinney Area Engineering and Maintenance Facility
2205 TX-5, McKinney, TX 75069
PROJECT NO. 18-47042001 2

ISSUED: 2021.04.21
DRAWN BY: CZ
REVISIONS:

IRRIGATION PLAN
L2.0

THIS DRAWING CREATED FOR PRODUCTION ON 22"x34" SHEET SIZE. DO NOT SCALE PRINTS.

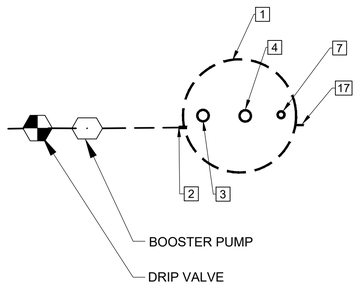

REFERENCE NOTE SCHEDULE:

SYMBOL	DESCRIPTION
1	5,000 GALLON RAIN WATER STORAGE TANK
2	OUTLET TO PUMP STATION (2" FLANGED STUB OUT)
3	AIR VENT 6' PVC SCH 40 PIPE WITH 6" HALF COUPLING TANK MOUNTED
4	16" DRAINAGE INLET (FROM ROOF SOLID DRAINAGE PIPE)
7	LIQUID LEVEL SWITCH # 1 - N/C DRY (2" FNPT THREAD INLET)
17	ADS 6" SOLID DRAINAGE PIPE FROM TANK TO 4" STORM DRAINAGE

CONTRACTOR TO FOLLOW ALL T.C.E.Q. REGULATIONS REGARDING RAINWATER HARVESTING.

1 CISTERN DIAGRAMMATIC LAYOUT
NTS

RAINWATER HARVESTING SYSTEM OPERATION

1. WATER ENTERS FILTER FROM DOWNSPOUT
2. FILTER REJECTS SOLID MATERIALS TO DRAIN
3. WATER FLOWS THROUGH CALMING INLET INTO TANK
4. MAXIMUM WATER LEVEL IS SKIMMER ON SIDES OF FILTER ASSEMBLY
5. FLOAT SWITCH PROHIBITS PUMP FROM OPERATING DRY
6. A BYPASS SWITCH ON THE WIRING TERMINATION BOX WILL ALLOW OVER-RIDE OF FLOAT SWITCH.
7. WATER IS SCREENED BEFORE ENTERING IRRIGATION ZONE
8. IF TANK IS FULL, WATER WILL FLOW TO OVERFLOW DRAIN THROUGH INLET FILTER

RAINWATER HARVESTING SYSTEM COMPONENT KEY:

1. INLET TO RECEIVE DOWNSPOUT FROM GETTER
2. TANK WITH INSPECTION PORT AND VENT
3. HYDRAULIC JUMP FILTER (FIRST FLUSH)
4. CALMING INLET
5. OVERFLOW TO STORM DRAIN
6. MAXIMUM WATER LEVEL AT FILTER SKIMMER
7. LOW WATER FLOAT
8. MINIMUM WATER LEVEL ABOVE INLET
9. CONDUIT FOR IRRIGATION SIGNAL WIRE TO FLOAT
10. ANTI-VORTEX INLET
11. SUCTION LINE TO PUMP
12. $\frac{3}{4}$ HP PUMP
13. SCREEN FILTER
14. 1" IRRIGATION VALVE
15. HEATED FIBERGLASS EQUIPMENT ENCLOSURE
16. WIRING TERMINATION BOX
17. CONDUIT FOR IRRIGATION SIGNAL WIRE
18. NOT USED
19. NOT USED
20. 1" BRASS SPRING CHECK VALVES
21. SUPPLY TO IRRIGATION ZONE

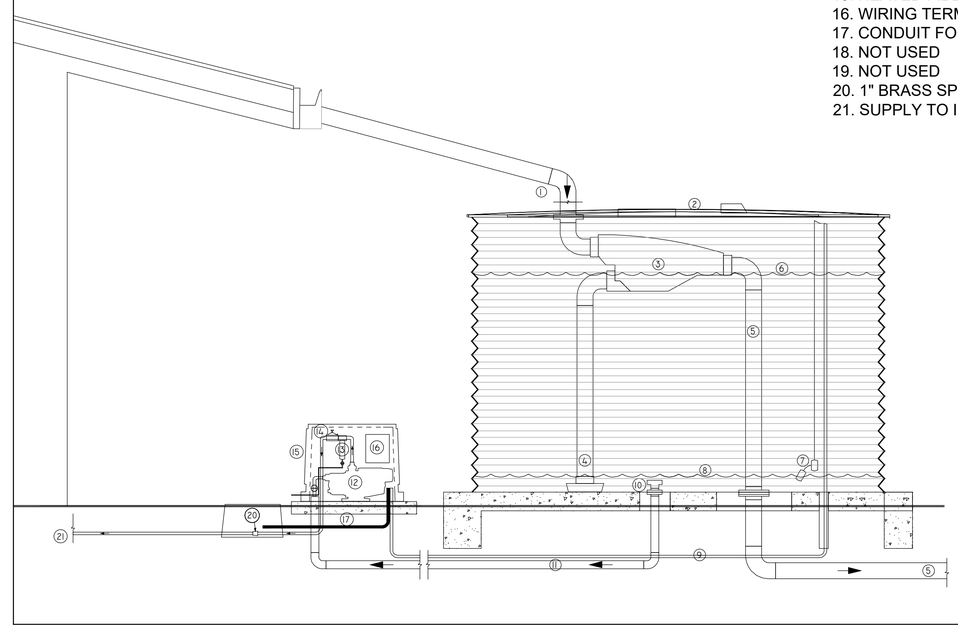

NOTES:

CONTRACTOR TO PROVIDE SHOP DRAWINGS FOR CISTERN SYSTEM INCLUDING TANK FOUNDATION SEALED BY STRUCTURAL ENGINEER REGISTERED IN TEXAS.

SINGLE PROVIDER ONLY FOR CISTERN, PUMP STATION.

APPROVED PROVIDERS:
1) CONTECH
2) IN-CONTROL

SHOP DRAWINGS SHALL BE APPROVED BY LANDSCAPE ARCHITECT.

2 CISTERN SECTION
1/2" =1'-0"

Texas Department of Transportation

COPYRIGHT ©2021

Jacobs
1999 Bryan Street, Suite 1200
Dallas, Tx 75201

JACOBS ENGINEERING GROUP, INC
TEXAS REGISTRATION #2966

STATE OF TEXAS
JACOB W. BAKER
16275
LICENSED IRRIGATOR
04.21.2021

DALLAS DISTRICT (18)
COLLIN COUNTY
McKinney Area Engineering and Maintenance Facility
2205 TX-5, McKinney, TX 75069
PROJECT NO. 18-470420012

ISSUED: 2021.04.21
DRAWN BY: JB
REVISIONS:

CISTERN DETAILS

L2.1

THIS DRAWING CREATED FOR PRODUCTION ON 22"x34" SHEET SIZE. DO NOT SCALE PRINTS.

KEY NOTES:

1. ELECTRIC CONTROL VALVE (MODEL & SIZE PER PLAN).
2. SNAP- TIE WIRE CONNECTORS AND EXPANSION COILS, 10 WRAPS AROUND 1/2" PIPE.
3. NOT USED
4. SDR 80 UNION
5. FINISH SOIL GRADE
6. SDR 80 UNION
7. WATER MAIN
8. VALVE BOX
9. DISTRIBUTION LINE
10. BRICK SUPPORT (1-EACH CORNER)
11. 3/4" CRUSHED GRAVEL (DRAINAGE FILL)
12. LOCKING COVER
13. FILTER FABRIC

NOTES:

1. INSTALL VALVES A MIN. OF 12" FROM STRUCTURES OR HARDSCAPE.
2. INSTALL VALVES IN PLANTING BEDS WHEREVER POSSIBLE.
3. PLACE VALVE BOX AT RIGHT ANGLES TO STRUCTURES OR HARDSCAPE.
4. INSTALL VALVE BOX SO THAT TOP OF VALVE BOX IS FLUSH WITH ADJACENT HARDSCAPE.
5. REMOTE CONTROL VALVES TO HAVE STANDARD IDENTIFICATION TAGS CORRESPONDING TO CONTROLLER STATION NUMBER ON THE VALVE.
6. PLACE 3/4" DIA. DRAIN ROCK PRIOR TO INSTALLATION OF VALVE BOX
7. REFER TO SPECIFICATION AND PLAN SHEETS FOR MORE INFORMATION.

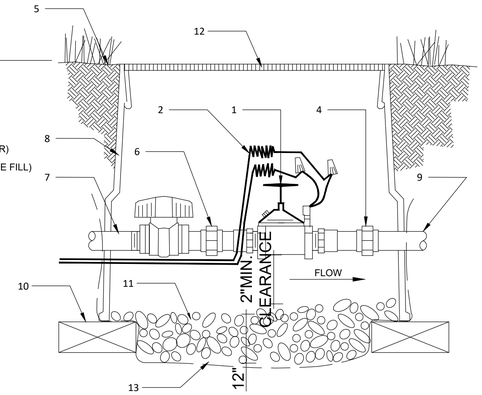

1 IRRIGATION VALVE

SECTION — SCALE: NTS

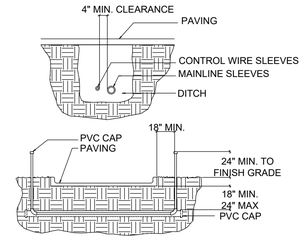

1. ALL PVC IRRIGATION SLEEVING TO BE SCH. 40.
2. ALL JOINTS TO BE SOLVENT WELDED AND WATERTIGHT.
3. WHERE THERE IS MORE THAN ONE SLEEVE, EXTEND SMALLER SLEEVE TO 24" MIN. ABOVE FINISH GRADE.
4. MECHANICALLY TAMP TO 95% PROCTOR.

8 IRRIGATION SLEEVING

SECTION — NTS

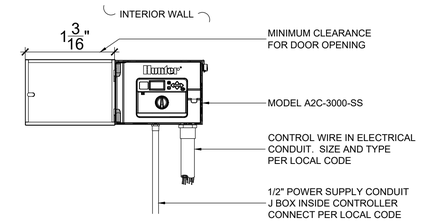

NOTE:
1. REFER TO MANUFACTURER'S MANUAL FOR MOUNTING INSTRUCTIONS
2. INSTALL WIRING (PER LOCAL CODE)
3. INSTALL CONDUIT W/ SWEEP FITTINGS

11 CONTROLLER

SECTION — NTS

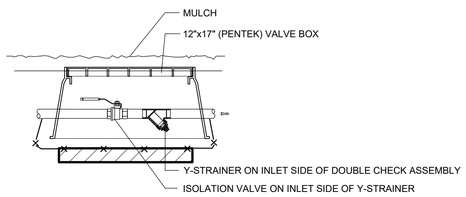

2 ISOLATION VALVE & WYE "Y" STRAINER

SECTION — NTS

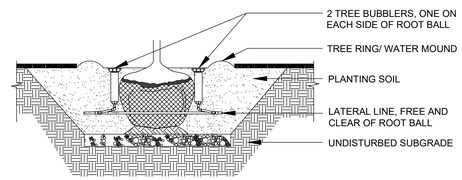

5 TREE BUBBLERS

SECTION — NTS

NOTE:
1. MOUNT VERTICALLY WITHIN 200' OF CONTROLLER
2. AVOID PLACEMENT UNDER EVE OR TREE CANOPY
3. INSTALL 10' HIGH OR MORE TO AVOID VANDALISM

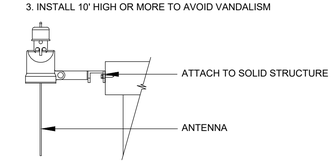

12 WIRELESS RAIN/FREEZE SENSOR

SECTION — NTS

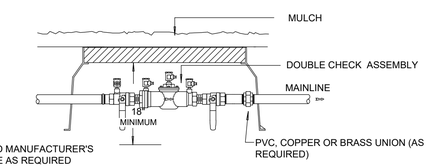

NOTE:
INSTALL PER LOCAL CODES AND MANUFACTURER'S RECOMMENDATIONS - INSULATE AS REQUIRED

3 BACKFLOW PREVENTER

SECTION — NTS

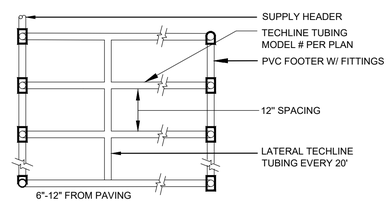

6 TECHLINE TUBING LAYOUT

SECTION — NTS

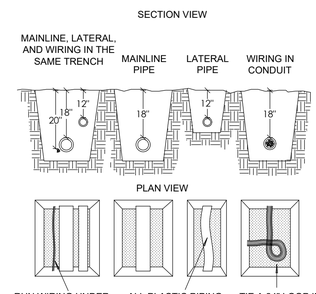

NOTE:
SLEEVE BELOW ALL HARDSCAPE ELEMENTS WITH SCHEDULE 40 PVC 2 TIMES THE DIAMETER OF THE PIPE WITHIN.

9 PIPE AND WIRE TRENCHING

SECTION — NTS

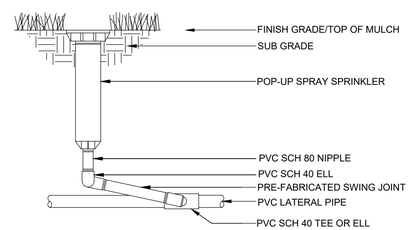

13 POP-UP SPRAY HEAD

SECTION — NTS

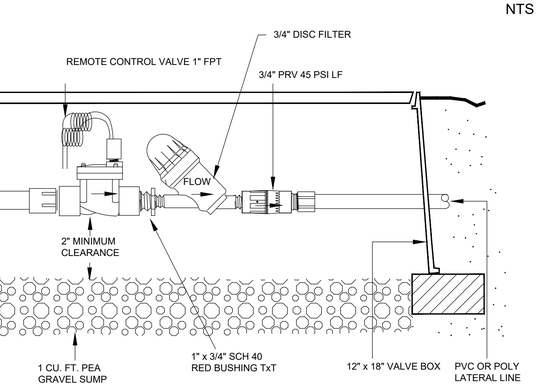

4 NETAFIM LOW FLOW CONTROL ZONE

SECTION — NTS

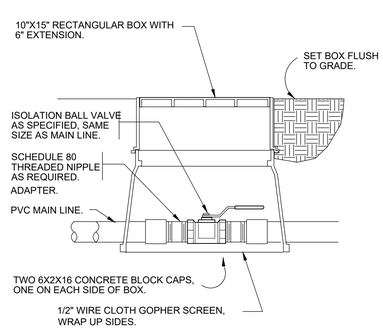

7 BRASS BALL ISOLATION VALVE

SECTION — NTS

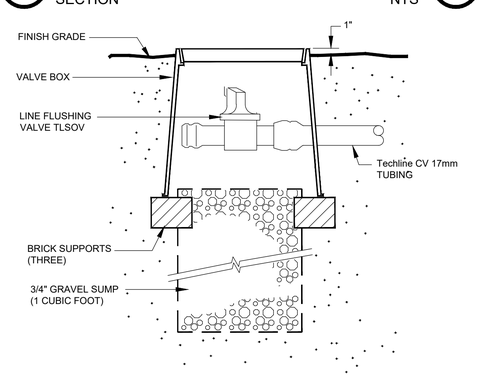

10 MANUAL LINE FLUSHING VALVE

SECTION — NTS

Texas Department of Transportation
COPYRIGHT ©2021

Jacobs
1999 Bryan Street, Suite 1200
Dallas, Tx 75201
JACOBS ENGINEERING GROUP, INC
TEXAS REGISTRATION #2966

STATE OF TEXAS
JACOB W. BAKER
76275
LICENSED IRRIGATOR
04.21.2021

DALLAS DISTRICT (18)
COLLIN COUNTY
McKinney Area Engineering and Maintenance Facility
2205 TX-5, McKinney, TX 75069
PROJECT NO. 18-470420012

ISSUED: 2021.04.21
DRAWN BY: JB
REVISIONS:

IRRIGATION DETAILS

L2.2

THIS DRAWING CREATED FOR PRODUCTION ON 22"x34" SHEET SIZE. DO NOT SCALE PRINTS.

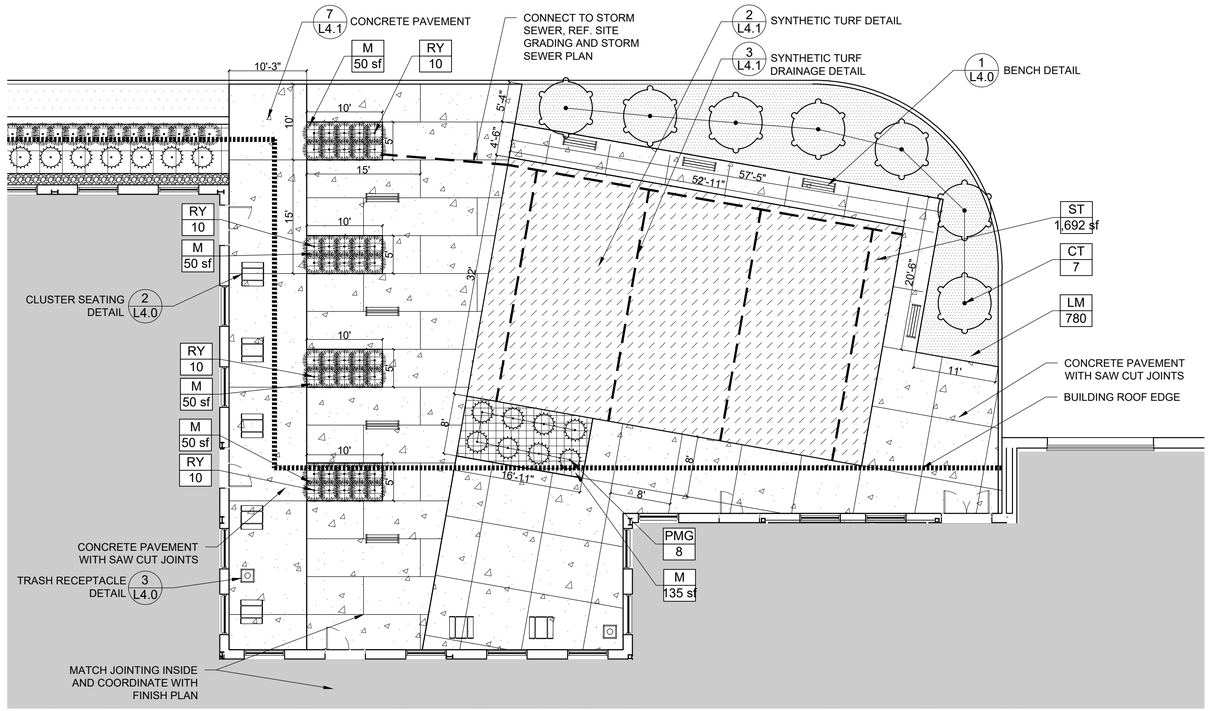

1 ENLARGEMENT PLANTING PLAN

1" = 10'-0"

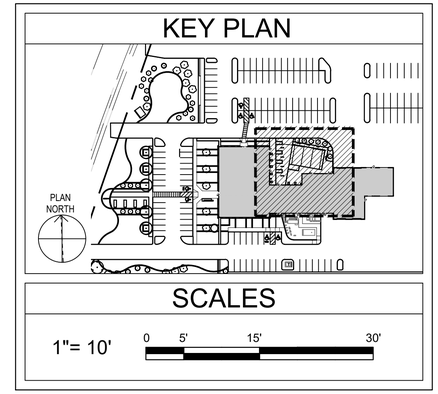

PLANT SCHEDULE ENLARGEMENT AREA 1/L3.0

TREES	CODE	QTY	COMMON NAME	BOTANICAL NAME	SIZE	CONDITION	SIZE	SPACING		REMARKS
	CT	7	CHASTE TREE	VITEX AGNUS-CASTUS	15 GAL	2"CAL	4`-6` HT			
SHRUBS	**CODE**	**QTY**	**COMMON NAME**	**BOTANICAL NAME**	**SIZE**	**CONDITION**	**SPRD**	**SPACING**		**REMARKS**
	RY	40	RED YUCCA	HESPERALOE PARVIFLORA	3 GAL	15" HT	15"	30"		
	PMG	8	PINK MUHLY GRASS	MUHLENBERGIA CAPILLARIS	3 GAL	24" MIN.	24"	36"		
GROUND COVERS	**CODE**	**QTY**	**COMMON NAME**	**BOTANICAL NAME**	**SIZE**	**CONDITION**	**SPREAD**	**SPACING**	**SPACING**	**REMARKS**
	LM	780	LIRIOPE	LIRIOPE MUSCARI `BIG BLUE`	4"POT				12" o.c.	FULL PLANT
	ST	1,692 SF		SYNTHETIC TURF	-					
MULCH	**CODE**	**QTY**	**COMMON NAME**	**BOTANICAL NAME**	**SIZE**	**CONDITION**	**SPREAD**	**SPACING**	**SPACING**	**REMARKS**
	M	335 SF	MULCH	MULCH	MULCH					CONSIDERED SUBSIDIAIRY TO PLANTING. SEE GENERAL PLANTING NOTES SHEET

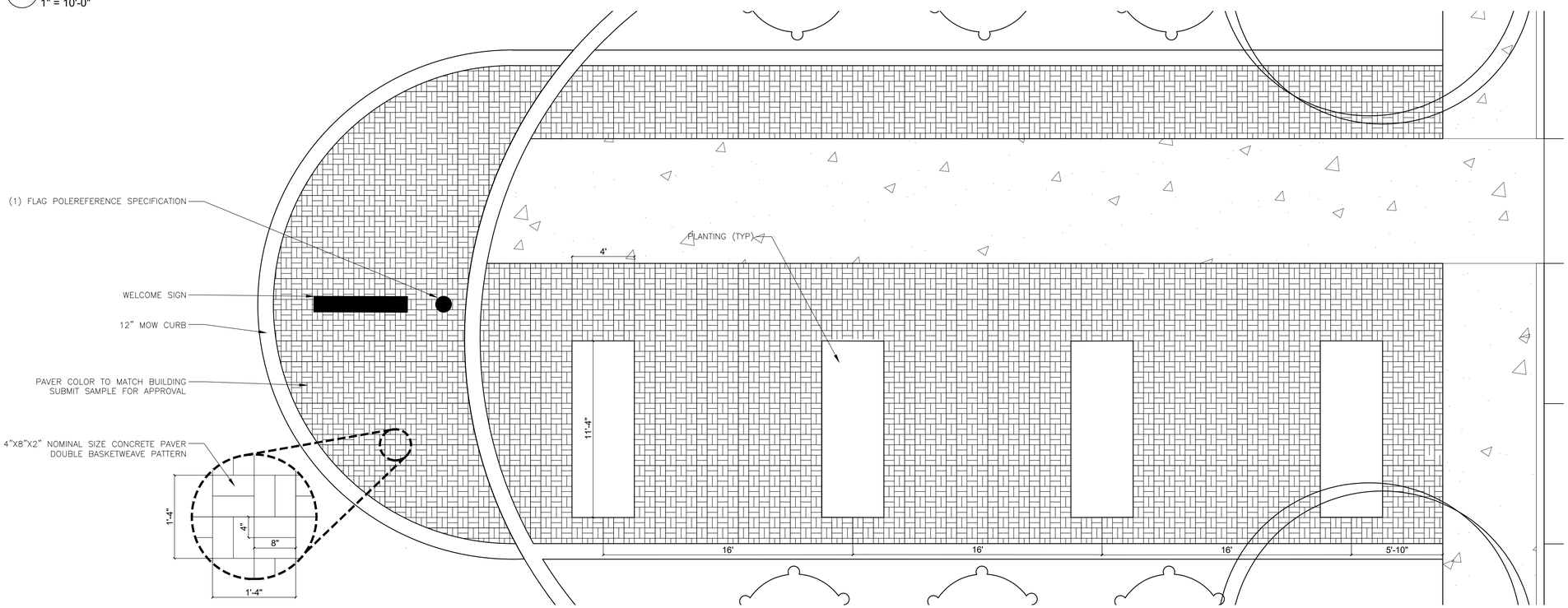

2 ENHANCED PAVING DETAIL

1/4" = 1'-0"

Texas Department of Transportation
COPYRIGHT ©2021

Jacobs
1999 Bryan Street, Suite 1200
Dallas, Tx 75201
JACOBS ENGINEERING GROUP, INC
TEXAS REGISTRATION #2966

04.21.2021

DALLAS DISTRICT (18)
COLLIN COUNTY
McKinney Area Engineering and Maintenance Facility
2205 TX-5, McKinney, TX 75069
PROJECT NO. 18-470420012

ISSUED: 2021.04.21
DRAWN BY: CZ
REVISIONS: CZ

ENLARGEMENT PLANTING PLAN

L3.0

THIS DRAWING CREATED FOR PRODUCTION ON 22"x34" SHEET SIZE. DO NOT SCALE PRINTS.

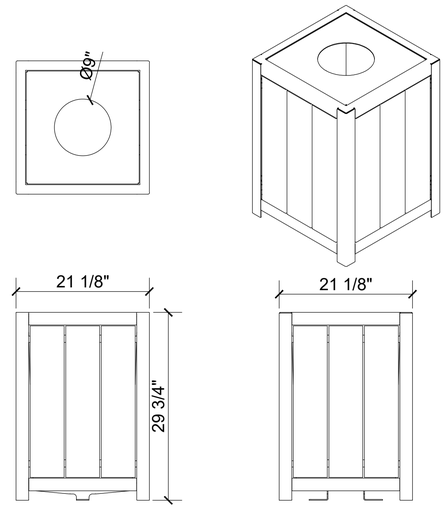

NOTE: MAGLIN SITE FURNITURE INC. TRASH, 1050, IPE (OR APPROVAL EQUAL)

3 TRASH RECEPTACLE DETAIL
NTS

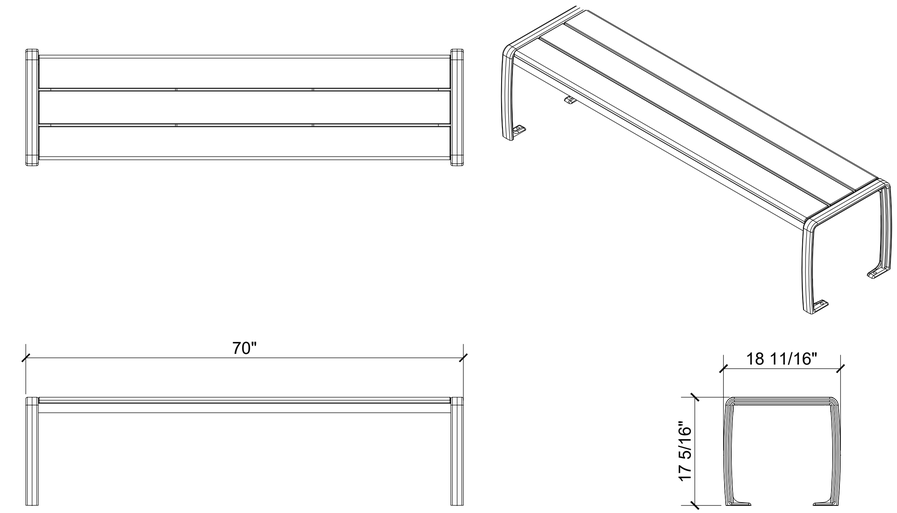

MAGLIN SITE FURNITURE INC. BENCH, 970, BACKLESS, WOOD (OR APPROVAL EQUAL)

1 BENCH DETAIL
NTS

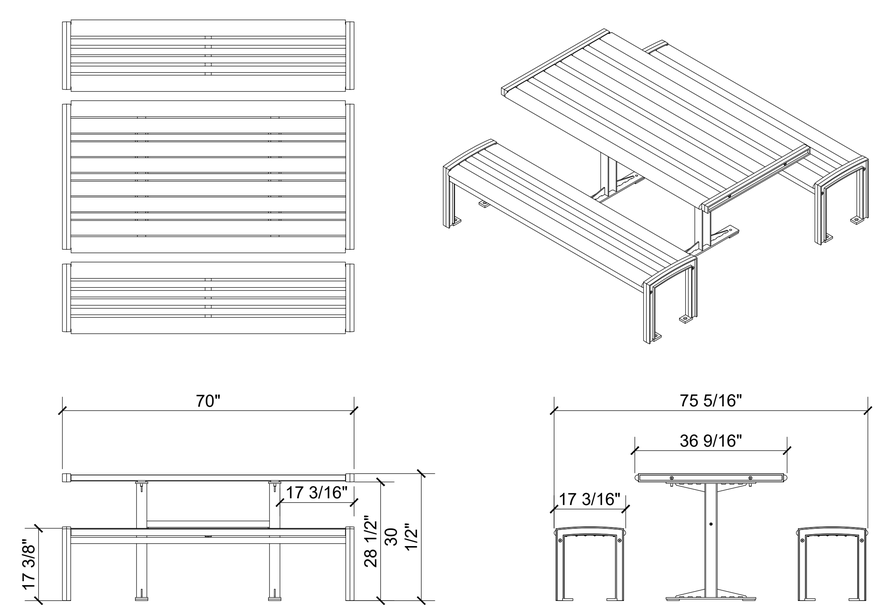

MAGLIN SITE FURNITURE INC. CLUSTER SEATING, 720-W, SURFACE MOUNT (OR APPROVAL EQUAL)

2 CLUSTER SEATING DETAIL
NTS

Texas Department of Transportation

COPYRIGHT ©2021

Jacobs
1999 Bryan Street, Suite 1200
Dallas, Tx 75201

JACOBS ENGINEERING GROUP, INC
TEXAS REGISTRATION #2966

04.21.2021

DALLAS DISTRICT (18)
COLLIN COUNTY
McKinney Area Engineering and Maintenance Facility
2205 TX-5, McKinney, TX 75069
PROJECT NO. 18-470420012

ISSUED: 2021.04.21
DRAWN BY: CZ
REVISIONS: CZ

SITE FURNITURE DETAILS

L4.0

THIS DRAWING CREATED FOR PRODUCTION ON 22"x34" SHEET SIZE. DO NOT SCALE PRINTS.

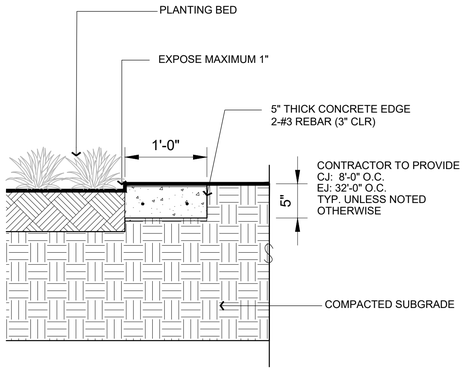

1 12" CONCRETE EDGE / MOW STRIP
NTS

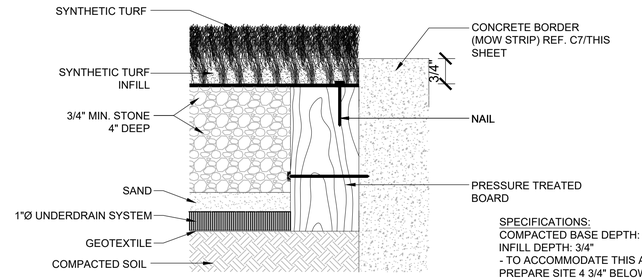

INSTALLATION WITH CONCRETE BORDER AND NAILER BOARD

SPECIFICATIONS:
COMPACTED BASE DEPTH: 4"
INFILL DEPTH: 3/4"
- TO ACCOMMODATE THIS APPLICATION, PREPARE SITE 4 3/4" BELOW GRADE.

NOTES:
1. THE EDGE OF THE TURF SHALL BE SECURED AND ANCHORED IN PLACE ACCORDING TO MANUFACTURER'S RECOMMENDATIONS.
2. DO NOT SCALE DRAWING.

2 SYNTHETIC TURF DETAIL
NTS

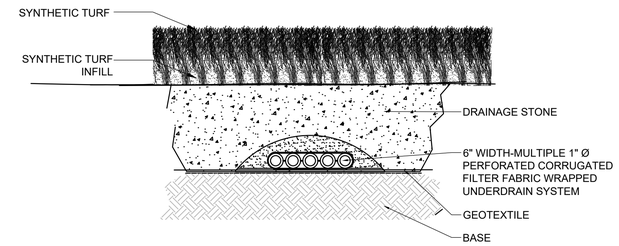

3 SYNTHETIC TURF DRAINAGE DETAIL
NTS

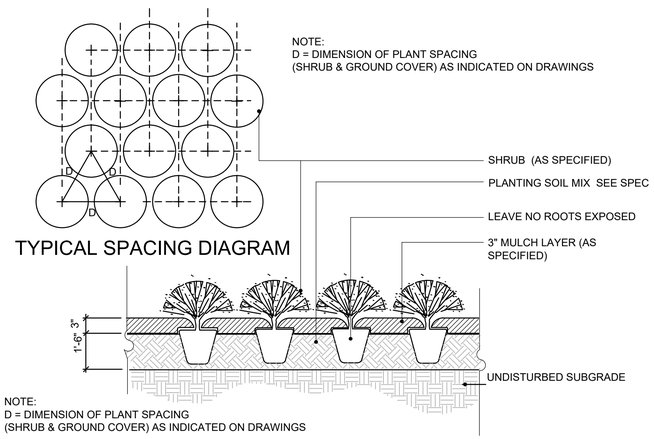

4 SHRUB & GROUNDCOVER PLANTING
NTS

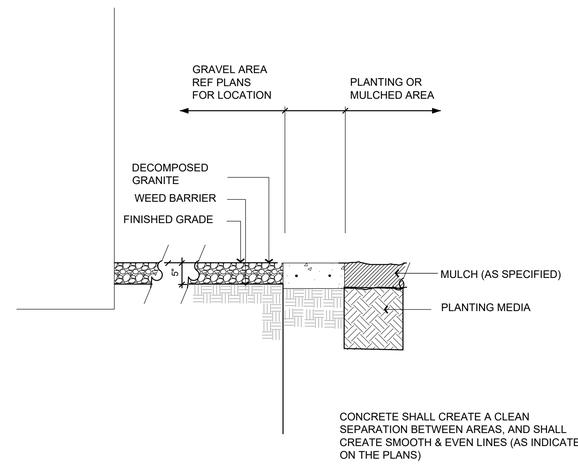

5 GRAVEL BED AND CONCRETE MOW STRIP
NTS

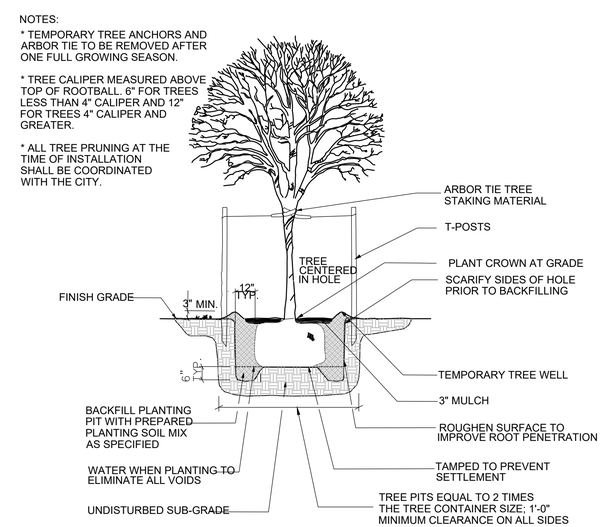

6 TREE PLANTING AND STAKING
NTS

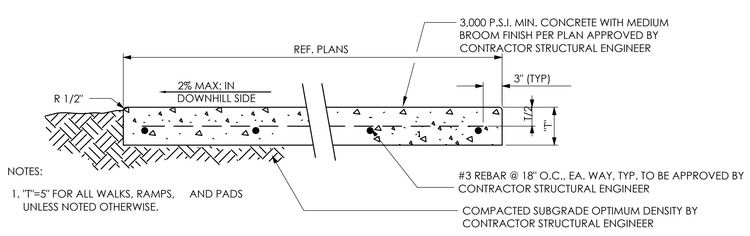

NOTES:
1. "T"=5" FOR ALL WALKS, RAMPS, AND PADS UNLESS NOTED OTHERWISE.

7 CONCRETE SECTION
NTS

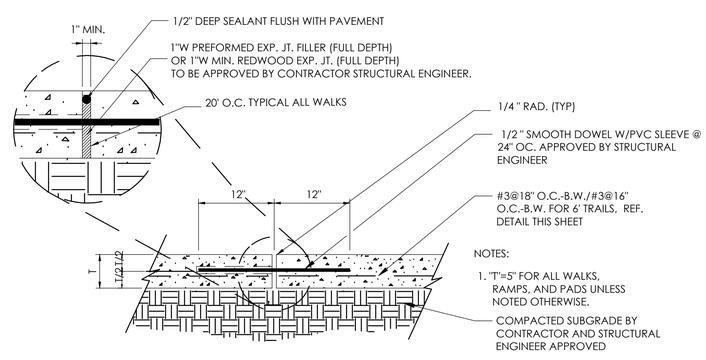

NOTES:
1. "T"=5" FOR ALL WALKS, RAMPS, AND PADS UNLESS NOTED OTHERWISE.

8 CONCRETE EXPANSION JOINT
NTS

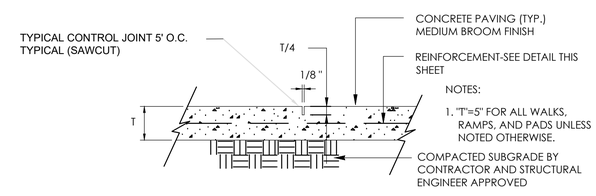

NOTES:
1. "T"=5" FOR ALL WALKS, RAMPS, AND PADS UNLESS NOTED OTHERWISE.

9 CONCRETE CONTROL JOINT
NTS

Texas Department of Transportation

COPYRIGHT ©2021

Jacobs
1999 Bryan Street, Suite 1200
Dallas, Tx 75201
JACOBS ENGINEERING GROUP, INC
TEXAS REGISTRATION #2966

04.21.2021

DALLAS DISTRICT (18)
COLLIN COUNTY
McKinney Area Engineering and Maintenance Facility
2205 TX-5, McKinney, TX 75069
PROJECT NO. 18-470420012

ISSUED: 2021.04.21
DRAWN BY: JB
REVISIONS: JB

LANDSCAPE DETAILS

L4.1

THIS DRAWING CREATED FOR PRODUCTION ON 22"x34" SHEET SIZE. DO NOT SCALE PRINTS.

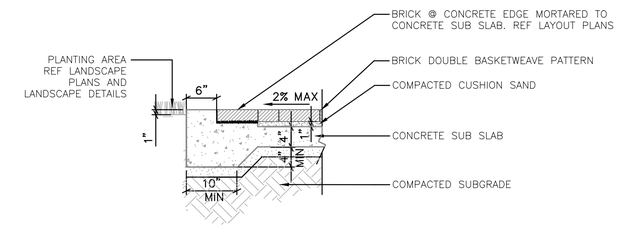

1 ENHANCED PAVING DETAIL
NTS

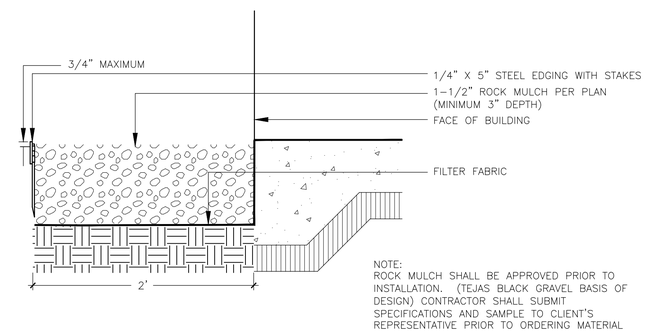

2 ROCK MULCH DETAIL
NTS

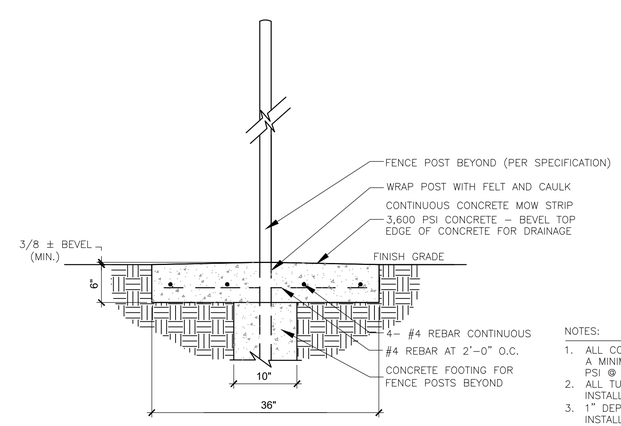

NOTES:

1. ALL CONCRETE USED IN FOOTING SHALL HAVE A MINIMUM COMPRESSIVE STRENGTH OF 3000 PSI @ 28 DAYS.
2. ALL TUBULAR STEEL POSTS SHALL BE INSTALLED LEVEL, PLUMB, AND SQUARE.
3. 1" DEPTH CONTROL JOINTS SHALL BE INSTALLED PERPENDICULARLY AT BETWEEN POSTS UNLESS NOTED OTHERWISE ALONG ENTIRE LENGTH OF MOW STRIP.

3 36" MOW STRIP W/ FENCE POST DETAIL
NTS

Texas Department of Transportation

COPYRIGHT ©2021

Jacobs
1999 Bryan Street, Suite 1200
Dallas, Tx 75201

JACOBS ENGINEERING GROUP, INC
TEXAS REGISTRATION #2966

04.21.2021

DALLAS DISTRICT (18)
COLLIN COUNTY
McKinney Area Engineering and Maintenance Facility
2205 TX-5, McKinney, TX 75069
PROJECT NO. 18-470420012

ISSUED: 2021.04.21
DRAWN BY: CZ
REVISIONS: CZ

LANDSCAPE DETAILS

L4.2

THIS DRAWING CREATED FOR PRODUCTION ON 22"x34" SHEET SIZE. DO NOT SCALE PRINTS.

ABBREVIATIONS

A

A/E	ARCHITECT/ENGINEER
AB	ANCHOR BOLT
ACI	AMERICAN CONCRETE INSTITUTE
ADDL	ADDITIONAL
ADJ	ADJACENT
AFF	ABOVE FINISH FLOOR
AISC	AMERICAN INSTITUTE OF STEEL CONSTRUCTION
APPROX	APPROXIMATE (-LY)
ARCH	ARCHITECTURAL
ARCH'T	ARCHITECT
ASCE	AMERICAN SOCIETY OF CIVIL ENGINEERS
ASTM	AMERICAN SOCIETY FOR TESTING AND MATERIALS

B

BB	BACK TO BACK
BC	BOTTOM CHORD
BL	BASE LINE
BLDG	BUILDING
BM	BEAM
BOT	BOTTOM
BP	BASE PLATE
BRG	BEARING
BRKT	BRACKET
BS	BOTH SIDES
BSMT	BASEMENT
BVL	BEVELED
BW	BOTH WAYS

C

C	COMPRESSION, CHANNEL SHAPE
CG	CENTER OF GRAVITY
CGC	CENTER OF GRAVITY OF CONCRETE
CGS	CENTER OF GRAVITY OF STEEL
CJ	CONSTRUCTION JOINT
CL	CENTERLINE
CLR	CLEAR, CLEARANCE
CMU	CONCRETE MASONRY UNIT
COE	CORPS OF ENGINEER'S
COL	COLUMN
CONC	CONCRETE
CONST	CONSTRUCTION
CONT	CONTINUOUS OR CONTINUED
CONX	CONNECTION
COR	CONTRACTING OFFICER'S REPRESENTATIVE

D

D	DEPTH
DETL	DETAIL
DIA	DIAMETER
DIAG	DIAGONAL
DIM	DIMENSION
DL	DEAD LOAD
DN	DOWN
DP	DAMP PROOFING
DWG	DRAWING (-S)
DWL	DOWEL

E

E	EAST
EA	EACH
EF	EACH FACE
EJ	EXPANSION JOINT
ELEC	ELECTRICAL
ELEV, EL	ELEVATION
EQ	EQUAL
EQUIP	EQUIPMENT
EW	EACH WAY
EXIST	EXISTING
EXP	EXPANSION
EXT	EXTERIOR

F

FAB	FABRICATION
FD	FLOOR DRAIN
FDN	FOUNDATION
FF	FINISH FLOOR
FIN	FINISH (-ED)
FLR	FLOOR
FS	FAR SIDE
FT	FOOT/FEET
FTG	FOOTING

G

GA	GAGE OR GAUGE
GALV	GALVANIZED
GB	GRADE BEAM

H

HORIZ	HORIZONTAL
HP	HIGH POINT
HS	HEADED STUD
HSS	HOLLOW STRUCTURAL SECTION
HT	HEIGHT

I

ID	INSIDE DIAMETER
IN	INCH (-ES)
INT	INTERIOR

J

JST	JOIST
JT	JOINT

K

K	KIPS (1000 LBS)
KO	KNOCKOUT

L

L	ANGLE SHAPE
LB,#	POUND
LD	DEVELOPMENT LENGTH
LDG	LANDING
LH	LEFT HAND
LL	LIVE LOAD
LLH	LONG LEG HORIZONTAL
LLV	LONG LEG VERTICAL
LONG	LONGITUDINAL
LP	LOW POINT
LW	LONG WAY
LWC	LIGHTWEIGHT CONCRETE

M

MAS	MASONRY
MATL	MATERIAL
MAX	MAXIMUM
MC	MISCELLANEOUS CHANNEL SHAPE
MECH	MECHANICAL
MEP	MECHANICAL, ELECTRICAL, PLUMBING
MEZZ	MEZZANINE
MFR	MANUFACTURE (-R)
MID	MIDDLE
MIN	MINIMUM
MISC	MISCELLANEOUS
MS	MIDDLE STRIP
MT	STRUCTURAL TEE CUT FROM MISC STEEL
MTL	METAL

N

N/A	NOT APPLICABLE
NF	NEAR FACE
NIC	NOT IN CONTRACT
NO	NUMBER
NOM	NOMINAL
NS	NEAR SIDE
NTS	NOT TO SCALE

O

OA	OVERALL
OC	ON CENTER
OD	OUTSIDE DIAMETER
OF	OUTSIDE FACE
OPNG	OPENING (-S)
OPP	OPPOSITE
OPP HND, OH	OPPOSITE HAND
OPT	OPTIONAL
OVS	OVERSIZE

P

PC	PRECAST CONCRETE
PERP	PERPENDICULAR
PG	PLATE GIRDER
PL	PLATE
PLUMB	PLUMBING
PREFAB	PREFABRICATED
PRELIM	PRELIMINARY
PRMLD	PREMOLDED
PROJ	PROJECTION
PSTG	PRESTRESSED GIRDER
P/T	POST-TENSION (-ED, -ING)
PT	POINT
PVC	POLYVINYL CHLORIDE
PVT	PAVEMENT

R

R	RIGHT, RISER
RAD	RADIUS
RD	ROOF DRAIN
RE:	REFER TO
REINF	REINFORCING (-ED,-MENT)
REM	REMAINDER
REQD	REQUIRED
REV	REVISION
RH	RIGHT HAND
RJ	RUSTICATION JOINT
RND	ROUND
RO	ROUGH OPENING
RW	RETAINING WALL

S

S	SOUTH, STANDARD SHAPE
SC	SHEAR CONNECTORS, SLIP CRITICAL
SCHED	SCHEDULE(D)
SDI	STEEL DECK INSTITUTE
SECT	SECTION
SHT	SHEET
SIM	SIMILAR
SJ	SAW JOINT
SJI	STEEL JOIST INSTITUTE
SL	SLOPE
SPA	SPACE
SPEC	SPECIFICATION(S)
SPL	SPECIAL
SQ	SQUARE
SS	STAINLESS STEEL
STD	STANDARD
STIFF	STIFFENER
STIR	STIRRUP
STL	STEEL
STR	STRUCTURAL
STRUCT	STRUCTURE
SW	SHEAR WALL
SYM	SYMMETRICAL

T

T	TOP, TENSION
T/	TOP OF
T&B	TOP & BOTTOM
TEMP	TEMPERATURE
THRD	THREADED
THK	THICKNESS
TOS	TOP OF STEEL
TRD	TREAD (-S)
TRNV	TRANSVERSE
TW	TILT WALL
TYP	TYPICAL

U

UON	UNLESS OTHERWISE NOTED

V

VERT	VERTICAL

W

W	WEST, WIDTH, WIDE FLANGE
WB	WIND BRACE
w/	WITH
w/o	WITHOUT
WP	WORK POINT
WPJ	WEAKENED PLANE JOINT
WT	WEIGHT, STRUCTURAL TEE CUT FROM WIDE FLANGE BEAM
WWF	WELDED WIRE FABRIC
WWM	WELDED WIRE MESH

X

XFMR	TRANSFORMER

STRUCTURAL SYMBOLS

SURFACE - STEPPED

SURFACE - SLOPE UP

SURFACE - SLOPE DOWN

SURFACE - SLOPE (2) WAYS

T/WALL — ELEVATION POINT (TOP OF ELEMENT INDICATED)

100'-0" — TOP OF CONCRETE EL

112'-0" — TOP OF MEMBER EL

WP — WORKPOINT

SLOPE INDICATOR

STRUCTURAL ARROW (DIRECTION OF SPAN)

COLUMN PASSING THRU THIS LEVEL

(+3") — TOP OF STEEL ± DEVIATION FROM TYPICAL

[X] — NUMBER OF EVENLY SPACED SHEAR STUDS

[X,Y,Z] — SPECIAL STUD SPACING

C 7/8" — THE AMOUNT OF MID-SPAN DEAD LOAD CAMBER

MOMENT CONNECTION

MATERIAL LEGEND

THE FOLLOWING SYMBOLS ARE USED TO REPRESENT THE MATERIALS SHOWN ON THE STRUCTURAL DRAWINGS. REFER TO SPECIFICATIONS AND GENERAL NOTES FOR MATERIAL QUALITIES REQUIRED

EARTH

ROCK

CAST-IN-PLACE CONCRETE

PRECAST CONCRETE

NON-SHRINK GROUT

CMU

EXISTING CONCRETE

STRUCTURAL STEEL IN CROSS SECTION

SHEET SYMBOLS

1/SF301

ENLARGED PLAN/ DETAIL REFERENCE

1/SF301

SECTION CUTS

1/SF301

ELEVATION OF WALL OR FRAME

DRAWING/DETAIL REFERENCE KEY

REFER TO

DRAWING/DETAIL NUMBER

RE: 1/SF301

DRAWING/DETAIL REFERENCED TO

Texas Department of Transportation

COPYRIGHT © 2021

Jacobs
1999 Bryan Street, Suite 1200
Dallas, Tx 75201

JACOBS ENGINEERING GROUP, INC
TEXAS REGISTRATION #2966

STATE OF TEXAS
GABRIEL A. SERNA
99793
04/21/2021

DALLAS DISTRICT (18)
COLLIN COUNTY
McKinney Area Engineering and Maintenance Facility
2205 TX-5, McKinney, TX 75069
PROJECT NO. 18-470420001 2

ISSUED: 2021.04.21
DRAWN BY: PA/JS
REVISIONS:

STRUCTURAL NOTES

S0.0

THIS DRAWING CREATED FOR PRODUCTION ON 22"x34" SHEET SIZE. DO NOT SCALE PRINTS.

GENERAL NOTES

A. BUILDING AND DESIGN CODES:

1. THE INTERNATIONAL BUILDING CODE 2018 EDITION WITH APPLICABLE MODIFICATIONS AND ORDINANCES, CITY OF MC KINNEY, TX.

2. ASCE 7-16 MINIMUM DESIGN LOADS FOR BUILDINGS AND OTHER STRUCTURES.

3. AISC MANUAL OF STEEL CONSTRUCTION, LOAD AND RESISTANCE FACTOR DESIGN AND CODE OF STANDARD PRACTICE.

4. ACI 318-14 BUILDING CODE REQUIREMENTS FOR STRUCTURAL CONCRETE.

5. ACI 530-16 BUILDING CODE REQUIREMENTS FOR MASONRY STRUCTURES.

6. CRSI MANUAL OF STANDARD PRACTICE.

7. SJI100-15 CODE OF STANDARD PRACTICE FOR K-SERIES, LH-SERIES, AND DLH-SERIES OPEN WEB STEEL JOISTS, AND FOR JOIST GIRDERS.

8. SDI STEEL DECK INSTITUTE CODE OF STANDARD PRACTICE 2017-STEEL ROOF DECK, NONCOMPOSITE AND COMPOSITE FLOOR DECKS.

B. DESIGN LOADS:

1. LIVE LOADS:

	UNIFORM LOAD
a. ROOF LIVE LOAD	20 PSF
b. TYPICAL FLOOR LIVE LOAD	100 PSF
C. MAINTENANCE	300 PSF

2. WIND LOADS:
a. BASIC WIND SPEED (3 SECOND GUST/FASTEST MILE) - 106 MPH
b. IMPORTANCE FACTOR - Iw=1.0
c. EXPOSURE - C
d. INTERNAL PRESSURE COEFFICIENT - CGpi = +/- 0.18

3. SEISMIC LOADS:
a. SEISMIC IMPORTANCE FACTOR - I = 1.0
b. MAPPED SPECTRAL RESPONSE ACCELERATIONS - Ss =0.118, S1 = 0.059
c. SITE CLASS - C
d. SEISMIC DESIGN CATEGORY A
e. BASIC FORCE RESISTING SYSTEM - ORDINARY BRACED, MOMENT FRAMES AND ORDINARY MASONRY SHEARWALLS
f. ANALYSIS PROCEDURE - EQUIVALENT LATERAL FORCE PROCEDURE.
g. RESPONSE MODIFICATION FACTOR - R = 3 1/2.
h. BASE SHEAR - OFFICE AND LAB = 13 KIPS VEHICLE SHOP AND TRUCK WASH BAYS = 15 KIPS.

C. GENERAL REQUIREMENTS:

1. VERIFY EXISTING CONDITIONS AND DIMENSIONS PRIOR TO BEGINNING WORK OR FABRICATING MATERIALS. NOTIFY A/E OF DISCREPANCIES BEFORE PROCEEDING WITH ANY PHASE OF WORK.

2. VERIFY THE LOCATION OF CHASES, INSERTS, OPENINGS, SLEEVES, FINISHES, DEPRESSIONS, PADS, AND WALL OPENINGS.

3. DO NOT SCALE DRAWINGS FOR THE PURPOSE OF ESTABLISHING DIMENSIONS.

4. DETAILS LABELED "TYPICAL DETAILS" ON DRAWINGS APPLY TO SITUATIONS OCCURRING ON THE PROJECT THAT ARE THE SAME OR SIMILAR TO THOSE SPECIFICALLY DETAILED. SUCH DETAILS APPLY WHETHER OR NOT DETAILS ARE REFERENCED AT EACH LOCATION. NOTIFY (COR) ENGINEER OF CONFLICTS REGARDING APPLICABILITY OF "TYPICAL DETAILS".

5. DO NOT LOAD THE SLAB ON GRADE OR SUPPORTED SLAB WITH ERECTION CRANES OR ERECTION EQUIPMENT. THE SLABS HAVE NOT BEEN DESIGNED FOR CRANE LOADS AND WILL REQUIRE AN INCREASE IN THICKNESS AND/OR REINFORCEMENT. OBTAIN A/E APPROVAL ON PROPOSED CRANE SUPPORT PLAN FOR SLABS PRIOR TO COMMENCING WORK.

6. DO NOT STORE OR STACK CONSTRUCTION MATERIALS ON POURED OR ERECTED FLOORS/ROOFS IN EXCESS OF 80 PERCENT OF LIVE LOAD. GENERAL CONTRACTOR WILL ENSURE THAT ALL SUB-CONTRACTORS ARE INFORMED OF LOADING RESTRICTIONS. AVOID IMPACT WHEN PLACING MATERIALS ON POURED OR ERECTED FLOORS OR ROOF.

7. THE CONTRACT STRUCTURAL DOCUMENTS REPRESENT THE FINISHED STRUCTURE. THE CONTRACTOR IS RESPONSIBLE FOR THE MEANS AND METHODS OF CONSTRUCTION. PROVIDE ALL MEASURES REQUIRED TO PROTECT THE STRUCTURE, WORKMEN, AND OTHER PERSONS DURING CONSTRUCTION; INCLUDING BRACING, SHORING FOR CONSTRUCTION EQUIPMENT, SHORING FOR THE BUILDING, FORMS AND CAFFOLDING, SHORING OF RETAINING WALLS AND OTHER TEMPORARY SUPPORTS AS REQUIRED.

8. PRINCIPAL OPENINGS THROUGH THE FRAMING ARE SHOWN ON DRAWINGS. EXAMINE THE ARCHITECTURAL AND MECHANICAL DRAWINGS FOR THE REQUIRED OPENINGS AND PROVIDE FOR REQUIRED OPENINGS WHETHER SHOWN ON THE STRUCTURAL DRAWINGS OR NOT. VERIFY SIZE AND LOCATION OF OPENINGS WITH THE MECHANICAL CONTRACTOR. DEVIATIONS FROM THE OPENINGS SHOWN ON THE STRUCTURAL DRAWINGS MUST BE APPROVED PRIOR TO IMPLEMENTING THE CHANGES.

9. DO NOT CUT OR DRILL THROUGH EXISTING REINFORCING. X-RAY TO LOCATE REINFORCING AT LOCATIONS REQUIRING CUTTING OR CORING PRIOR TO START OF CONSTRUCTION. SUBMIT REINFORCEMENT LOCATION IN CONFLICT WITH DRAWINGS FOR A/E REVIEW.

MASONRY NOTES

A. REINFORCED MASONRY WORK AND MATERIALS TO BE IN ACCORDANCE WITH THE BUILDING CODE REQUIREMENTS FOR MASONRY STRUCTURES ACI 530/ ASCE 5/ TMS 402.

B. REINFORCED MASONRY TO CONFORM TO THE SPECIFICATIONS FOR MASONRY STRUCTURES ACI 530.1/ ASCE 6/ TMS 602 (WITH THE EXCEPTIONS NOTED IN JOB SPECIFICATIONS).

C. PROVIDE CONCRETE MASONRY UNITS (CMU) OF NORMAL WEIGHT (125 PCF MINIMUM), CONFORMING TO THE LATEST EDITION OF ASTM C 90. LAY UNITS IN RUNNING BOND UNLESS OTHERWISE NOTED.

D. PROVIDE MASONRY MORTAR MEETING THE REQUIREMENTS OF TYPE S PER ASTM C 270. PROVIDE AGGREGATES FOR MORTAR CONFORMING TO ASTM C 404.

E. PROVIDE MASONRY GROUT WITH MINIMUM 28-DAY COMPRESSIVE STRENGTH OF 3,000 PSI TESTED IN ACCORDANCE WITH ASTM C 1019. GROUT TO MEET THE MINIMUM REQUIREMENTS SPECIFIED IN ASTM C 476.

F. PROVIDE MASONRY ASSEMBLAGES WITH MINIMUM PRISM STRENGTH (F'm) OF 2,500 PSI, TESTED IN ACCORDANCE WITH ASTM C1314.

G. PROVIDE CONCRETE MASONRY UNITS IN ACCORDANCE WITH ASTM C 426 LIMITS FOR DRYING SHRINKAGE OF CONCRETE BLOCKS.

H. PROVIDE VERTICAL REINFORCEMENT IN CMU WALLS AS SHOWN IN DRAWINGS. FILL THE REINFORCED CELLS SOLIDLY WITH GROUT. MAXIMUM HEIGHT OF GROUT POURS TO BE AS PER ACI 530, TABLE 1.15.1.

I. PROVIDE HORIZONTAL JOINT REINFORCING IN WALLS AT 16 INCHES ON CENTER VERTICAL SPACING. JOINT REINFORCING TO BE HOT DIP GALVANIZED NO. 9 GAGE LADDER TYPE WITH CROSS TIES AT 16 INCHES ON CENTER, CONFORMING TO ASTM A 82. SPACE JOINT REINFORCING AT 8 INCHES ON CENTER WHEN CELLS BETWEEN OPENINGS, CELLS BETWEEN OPENING AND EDGE OF WALL IS LESS THAN 4 FEET. SPACE JOINT REINFORCEMENT AT 8 INCHES ON CENTER IN THE PARAPETS. LAP SPLICE ENDS A MINIMUM OF 12 INCHES AT SPLICES.

J. LAY HOLLOW UNITS WITH FULL MORTAR COVERAGE ON HORIZONTAL AND VERTICAL FACE SHELLS. PROVIDE FULL MORTAR COVERAGE FOR WEBS WHEN ADJACENT TO GROUTED CELLS.

K. ALIGN VERTICAL CELLS TO BE FILLED WITH GROUT TO PROVIDE CONTINUOUS UNOBSTRUCTED VERTICAL CELLS. REMOVE OVERHANGING MORTAR OR OTHER OBSTRUCTION AND DEBRIS FROM THE INSIDES OF SUCH CELL WALLS. PROVIDE GROUT WITH 8 INCH SLUMP AND CONSOLIDATE BY MEANS OF HAND TAMPING TO ENSURE COMPLETE FILLING OF CELLS.

L. PROVIDE AN 8 INCH HIGH BOND BEAM (MINIMUM DEPTH UNLESS OTHERWISE NOTED) AT TOP OF ALL CMU WALLS. REINFORCE BOND BEAM PER DETAIL(S). IF BOND BEAMS AT INTERSECTING WALLS MEET AT DIFFERENT ELEVATIONS, EXTEND BOND BEAMS AROUND INTERSECTING CORNER TO FIRST INTERIOR REINFORCED CELL, BUT NOT LESS THAN 4 FEET. CONSTRUCT BOND BEAMS WITH PORTLAND CEMENT GROUT 2,000 PSI MINIMUM COMPRESSIVE STRENGTH AT 28 DAYS AND A MAXIMUM AGGREGATE SIZE OF 3/4 INCH.

M. PROVIDE VERTICAL REINFORCING AT CORNERS OF CMU WALLS, AT ENDS OF WALLS, EACH SIDE OF CONTROL JOINT, AND EACH SIDE OF WALL OPENINGS PER DETAIL(S). PROVIDE MINIMUM 3/8 INCH THROUGH-WALL CONTROL JOINTS AT 40'-0" MAXIMUM SPACING UNLESS OTHERWISE NOTED ON DRAWINGS.

N. INSTALL ANCHORS, ACCESSORIES, AND OTHER ITEMS TO BE BUILT IN AS WORK PROGRESSES.

O. PERFORM CUTTING AND FITTING OF MASONRY WITH MASONRY SAWS PROVIDING CUT FINISHED UNITS.

P. CELLS AT OR BELOW FINISHED GRADE ARE TO BE GROUTED SOLID.

Q. WHEN A FOUNDATION DOWEL DOES NOT LINE UP WITH A VERTICAL CORE, DO NOT SLOPE DOWEL MORE THAN ONE HORIZONTAL TO SIX VERTICAL.

FOUNDATION NOTES

A. REFER TO THE GEOTECHNICAL REPORT FOR GENERAL REQUIREMENTS OF EARTHWORK, OVER EXCAVATION, SUBGRADE PREPARATION, FILL AND COMPACTION, WATERPROOFING AND OTHER PERTINENT REQUIREMENTS AND INFORMATION.

B. FOUNDATION DESIGN IS BASED UPON THE SOILS EXPLORATION AND REPORT BY HVJ ASSOCIATES TITLED "MCKINNEY AREA ENGINEER AND MAINTENANCE FACILITY, COLLIN COUNTY TEXAS", REPORT NO HG1710036.2.2 DATED NOVEMBER 11, 2020.

C. SLABS ON GRADE, SPREAD AND CONTINUOUS FOOTINGS ARE DESIGNED TO BEAR ON COMPACTED STRUCTURAL SELECT FILL OR LIME TREATED SITE SOILS. REFER TO THE GEOTECHNICAL REPORT FOR THE BUILDING PAD PREPARATION DETAILS. NET TOTAL ALLOWABLE PRESSURE IS 3,400 PSF AND NET DEAD PLUS SUSTAINED LIVE LOAD ALLOWABLE PRESSURE IS 2,200 PSF.

D. THE EXCAVATION FOR THE STRUCTURAL SELECT FILL OR THE LIME TREADED SITE SOILS SHALL EXTEND 5 FT BEYOND THE PERIMETER OF THE BUILDINGS.

E. ARRANGE FOR OWNER'S INDEPENDENT TESTING AGENCY TO INSPECT AND TEST THE BUILDING PAD PREPARATIONS, QUALIFICATIONS AND COMPACTION OF THE STRUCTURAL SELECT FILL PER THE GEOTECHNICAL REPORT, FOUNDATION SIZES, REINFORCING, BEARING DEPTH AND BEARING STRATA BEFORE PLACING THE FOUNDATION CONCRETE.

F. FORM SIDES OF STEM WALLS STRAIGHT AND TO SPECIFIED DIMENSIONS. EARTH FORMS WILL NOT BE PERMITTED

G. MAINTAIN PROPER SITE DRAINAGE DURING CONSTRUCTION TO ENSURE SURFACE RUNOFF AWAY FROM STRUCTURES AND TO PREVENT PONDING OF SURFACE RUNOFF NEAR THE STRUCTURES.

H. KEEP OPEN EXCAVATIONS AROUND BUILDING PERIMETER DRY. BACKFILL AGAINST FOUNDATIONS AND GRADE BEAMS AS SOON AS PRACTICAL. PUMP WATER OUT OF OPEN EXCAVATIONS IF FLOODED PRIOR TO BACKFILLING.

STRUCTURAL STEEL NOTES

A. PROVIDE STRUCTURAL STEEL OF THE FOLLOWING ASTM DESIGNATIONS UNLESS OTHERWISE NOTED:

1. STRUCTURAL STEEL WIDE FLANGE AND WT SHAPES - ASTM A 992

2. STRUCTURAL STEEL STANDARD SHAPES, CHANNELS AND ANGLES - ASTM A 36

3. EDGE ANGLES, BENT PLATES, HANGER AND BRACES - ASTM A 36

4. STRUCTURAL TUBING (SQUARE OR RECTANGULAR) - ASTM A 500, GRADE C

5. BASE PLATES AND MISCELLANEOUS STEEL PLATES - ASTM A 36

6. CONNECTION MATERIALS:

a. BEAM COLUMN STIFFENER PLATES AND DOUBLER PLATES TO MATCH THE GRADE STEEL OF STRUCTURAL ELEMENT
b. ALL CONNECTION MATERIALS, EXCEPT AS OTHERWISE NOTED HEREIN OR IN THE DRAWINGS, INCLUDING BEARING PLATES, GUSSET PLATES, STIFFENER PLATES, ANGLES, ETC. - ASTM A 36

8. HIGH STRENGTH BOLTS ASTM F3125 GRADE A325

9. HARDENED STEEL WASHERS - ASTM F 436

10. HEAVY HEX NUTS - ASTM A 563

B. WELD MINIMUM SIZE AND STRENGTH

1. PROVIDE MINIMUM SIZE OF FILLET WELDS AS SPECIFIED IN TABLE J2.4 OF THE AISC MANUAL.

2. PROVIDE MINIMUM EFFECTIVE THROAT THICKNESS OF PARTIAL PENETRATION GROOVE WELDS AS SPECIFIED IN TABLE J2.3 OF THE AISC MANUAL.

3. DEVELOP THE FULL TENSILE STRENGTH OF THE MEMBER ELEMENT JOINED ON ALL SHOP AND FIELD WELDS UNLESS OTHERWISE NOTED ON THE DRAWINGS.

5. PROVIDE ELECTRODES FOR FIELD OR SHOP WELDING THAT CONFORM TO AWS D1.1 CLASS E70XX.

C. PROVIDE MINIMUM OF TWO BOLTS PER CONNECTION. MINIMUM BOLT DIAMETER TO BE 3/4 INCH.

D. PROVIDE BOLTS, NUTS AND WASHERS THAT ARE HOT DIP GALVANIZED ACCORDING TO ASTM A 153, CLASS C WHEN USED TO CONNECT STEEL ELEMENTS THAT ARE HOT DIP GALVANIZED AFTER FABRICATION.

E. PROVIDE SIMPLE SHEAR CONNECTIONS FOR STEEL CONNECTIONS NOT OTHERWISE SPECIFIED UTILIZING HIGH STRENGTH BEARING BOLTS IN SINGLE OR DOUBLE SHEAR. PROVIDE DOUBLE ANGLE OR SINGLE PLATE SHEAR TAB BOLTED CONNECTIONS.

F. STEEL FABRICATION

1. FABRICATE AND ASSEMBLE STRUCTURAL MEMBERS/ASSEMBLIES IN SHOP TO GREATEST EXTENT POSSIBLE.

2. SPLICING OF STRUCTURAL STEEL MEMBERS IS PROHIBITED WITHOUT PRIOR APPROVAL BY THE A/E.

3. BE RESPONSIBLE FOR ALL ERRORS OF DETAILING ON THE SHOP DRAWINGS, ERRORS IN FABRICATION, AND THE CORRECT FITTING OF STRUCTURAL STEEL MEMBERS.

G. CONFORM TO THE AISC CODE OF STANDARD PRACTICE, FOR ERECTION TOLERANCES. FIELD MODIFICATION TO STRUCTURAL STEEL IS PROHIBITED WITHOUT PRIOR APPROVAL BY THE A/E.

H. CLEAN STEEL OF RUST, LOOSE MILL SCALE AND OTHER FOREIGN MATERIALS WHERE REQUIRED FOR FABRICATION, FITTING UP, OR WELDING.

I. DO NOT CUT STRUCTURAL STEEL MEMBERS FOR THE WORK OF OTHER TRADES WITHOUT PRIOR REVIEW AND APPROVAL OF THE A/E .

J. AFTER FABRICATION, HOT DIP GALVANIZE STRUCTURAL STEEL AND THEIR CONNECTIONS PERMANENTLY EXPOSED TO THE OUTSIDE. SUCH ITEMS INCLUDE BUT ARE NOT LIMITED TO:

1. SHELF ANGLES

2. PARAPET WALL SUPPORTING MEMBERS

3. SCREEN WALL SUPPORTING MEMBERS

4. EMBEDDED PLATES IN CONCRETE

5. BUILDING CLADDING SUPPORT STEEL

K. EXAMINE THE ARCHITECTURAL AND STRUCTURAL DRAWINGS FOR OTHER ITEMS THAT REQUIRE HOT DIPPED GALVANIZATION.

L. PROVIDE NON-SHRINK/NON-METALLIC GROUT FOR BASE PLATES WITH MINIMUM 28 DAY COMPRESSIVE STRENGTH OF 6000 PSI. COMPLETE GROUT WORK BEFORE ROOF DECK INSTALLATION.

M. FURNISH STEEL SHOP DRAWINGS FOR ARCHITECT'S AND STRUCTURAL ENGINEER'S REVIEW PRIOR TO FABRICATION. INCLUDE WELDING PROCEDURES, TESTING PROGRAMS FOR WELDING AND HIGH STRENGTH BOLTING, COATING MATERIAL, AND ERECTION SEQUENCE ON SHOP DRAWINGS.

N. MILL STEEL COLUMN ENDS TO FIT FLUSH WITH BASE PLATE, CAP PLATE, AND END PLATES. FIELD ASSEMBLY OF THESE STEEL ELEMENTS TO THE COLUMNS IS PROHIBITED.

O. PROVIDE TEMPORARY SHORING OR BRACING DURING CONSTRUCTION PHASE PRIOR TO COMPLETING CONNECTIONS.

CONCRETE NOTES

A. PROVIDE CONCRETE AS SHOWN BELOW. PROVIDE BATCH MIXING, TRANSPORTATION, PLACING AND CURING OF CONCRETE IN ACCORDANCE WITH RECOMMENDATIONS OF ACI 301, ACI 318 AND ASTM C94. USE TYPE I PORTLAND CEMENT UNLESS OTHERWISE NOTED. PROVIDE ADMIXTURES AND SPECIAL REQUIREMENTS AS SPECIFIED.

1. NORMAL WEIGHT(150 PCF), F'c = 4,000 PSI CONCRETE AT 28 DAYS
   a. ALL CONCRETE UNLESS OTHERWISE NOTED.

B. UNLESS SPECIFIED BELOW, CONCRETE MUST REACH THE FOLLOWING PERCENTAGES OF ITS 28 DAY COMPRESSIVE STRENGTH (F'c) BEFORE FORMS MAY BE REMOVED:

1. BEAM SIDES - 40 PERCENT

C. PROVIDE CONCRETE MIXES DESIGNED BY A QUALIFIED TESTING LABORATORY FOR REVIEW AND APPROVAL BY THE STRUCTURAL ENGINEER.

D. PROVIDE ADEQUATE STRUCTURAL FRAMING AS APPROVED BY STRUCTURAL ENGINEER FOR MECHANICAL OPENINGS THROUGH THE SLABS, WALLS, AND FLOOR DECK. OPENINGS WILL NOT BE PERMITTED THROUGH BEAMS UNLESS SPECIFICALLY DETAILED.

E. FOR PIPE INSTALLED HORIZONTALLY WITHIN SLAB, PROVIDE MAXIMUM OUTSIDE DIAMETER OF 30 PERCENT OF THE SLAB THICKNESS. PLACE CONDUIT OR PIPE BETWEEN THE TOP AND BOTTOM LAYERS OF REINFORCEMENT WITHIN THE CENTER THIRD OF THE SLAB. DO NOT SPACE CONDUITS OR PIPES CLOSER THAN THREE DIAMETERS OR WIDTHS ON CENTER.

F. PROVIDE CONSTRUCTION AND CONTROL JOINTS AS INDICATED ON DRAWINGS. HORIZONTAL CONSTRUCTION JOINTS ARE NOT ALLOWED UNLESS SPECIFICALLY NOTED OR APPROVED BY STRUCTURAL ENGINEER.

G. PROVIDE CONSTRUCTION/CONTROL JOINT IN SLABS ON GRADE AT A MAXIMUM JOINT SPACING OF 10 FEET AT 5" SLABS AND 16 FEET AT 8" SLABS. SLAB PANEL DIMENSIONS BETWEEN JOINTS SHALL MAINTAIN A MAXIMUM RATIO OF LONG DIMENSION TO SHORT DIMENSION OF 1.25 TO 1. PROVIDE (2) #4 X 4'-0" AT ALL SLAB RE-ENTRANT CORNERS.

H. PROVIDE CONSTRUCTION JOINTS IN WALLS, ELEVATED SLABS, AND ELEVATED BEAMS SPACED LESS THAN 60 FEET APART IN ANY DIRECTION.

J. WIRE BRUSH AND CLEAN CONSTRUCTION JOINTS PRIOR TO POURING NEW CONCRETE.

K. CHAMFER EXPOSED EDGES 3/4 INCH UNLESS OTHERWISE NOTED.

L. REFERENCE THE APPROPRIATE DISCIPLINE'S DRAWINGS FOR SUBSLAB PIPING AND SLAB AND WALL PENETRATIONS.

M. OPENINGS WILL NOT BE PERMITTED THROUGH BEAMS UNLESS SPECIFICALLY DETAILED.

REINFORCING STEEL NOTES

A. PROVIDE DETAILING, FABRICATION, AND INSTALLATION OF REINFORCING AND ACCESSORIES IN ACCORDANCE WITH ACI 315 AND ACI 318.

B. PROVIDE NEW BILLET STEEL REINFORCING BARS IN ACCORDANCE WITH ASTM A 615, GRADE 60.

C. PROVIDE ANCHOR RODS CONFORMING TO THE STANDARDS OF ASTM F1554 GRADE 36 UNLESS OTHERWISE NOTED.

D. COORDINATE PLACEMENT OF CAST-IN-PLACE EMBEDS AND ANCHOR RODS. SET ANCHOR RODS WITH A TEMPLATE. SECURELY ATTACH EMBED ITEMS TO FORMWORK OR REINFORCING.

E. PROVIDE CLASS "B" REINFORCEMENT SPLICES FOR CONTINUOUS REINFORCEMENT. PROVIDE STANDARD 90-DEGREE HOOKS IN ACCORDANCE WITH ACI 318, UNLESS OTHERWISE NOTED. STAGGER SPLICES UNLESS SPECIFICALLY NOTED.

F. MAINTAIN THE FOLLOWING CONCRETE COVERAGE FOR REINFORCING STEEL UNLESS OTHERWISE NOTED:

1. CONCRETE CAST AGAINST AND PERMANENTLY EXPOSED TO EARTH - 3 INCHES

2. CONCRETE EXPOSED TO WEATHER
   a. NO. 6 AND LARGER - 2 INCHES
   b. NO. 5 AND SMALLER - 1-1/2 INCHES

3. CONCRETE NOT EXPOSED TO WEATHER OR IN CONTACT WITH THE GROUND:
   a. SLABS AND WALLS
      · NO. 14 AND NO. 18 - 1-1/2 INCHES
      · NO. 11 AND SMALLER - 3/4 INCH
   b. BEAM STIRRUPS - 1-1/2 INCHES

G. DO NOT WELD OR BEND REINFORCEMENT IN THE FIELD UNLESS SPECIFICALLY SHOWN OR APPROVED BY STRUCTURAL ENGINEER.

H. WHERE REQUIRED, PROVIDE DOWELS TO MATCH SIZE AND SPACING OF MAIN REINFORCING.

METAL DECK NOTES

A. PROVIDE DESIGN, FABRICATION, AND ERECTION OF METAL DECK CONFORMING TO THE STEEL DECK INSTITUTE'S "CODE OF RECOMMENDED STANDARD PRACTICE AND BASIC DESIGN SPECIFICATIONS".

B. FORM ROOF AND FLOOR DECK FROM STEEL SHEETS CONFORMING A 653 OR HIGHER SPECIFICATIONS WITH A MINIMUM YIELD STRENGTH OF 33 KSI.

C. ATTACH SHEETS TO STEEL SUPPORT MEMBERS AS INDICATED AND IN ACCORDANCE WITH THE MANUFACTURER'S INSTRUCTIONS FOR INSTALLATION. WHEN DECK IS SCHEDULED TO BE EXPOSED, DE-SLAG, CLEAN AND TOUCH UP WELDS WITH A ZINC-RICH PRIMER.

D. LAP ROOF AND FLOOR DECK ENDS MINIMUM OF 2 INCHES. WHEN FASTENING DECK TO SUPPORT MEMBERS, PROVIDE WELDING MATERIALS INSTALLATION PROCEDURES TO PREVENT BURNING OF HOLES IN DECK.

E. AT ENDS OF DECKS OR WHERE CHANGES OF DECK DIRECTION OCCUR, FASTEN TO SUPPORTS AT EACH FLUTE. PROVIDE ADEQUATE CLOSURES AND FASTENERS TO SIDES AT 18 INCHES ON CENTER.

F. WHERE PARTIAL PANELS MAY BE REQUIRED TO COMPLETE DECK INSTALLATION AT PERIMETER OF STRUCTURE, PROVIDE WELDS IN EACH FLUTE TO STRUCTURAL MEMBERS. INSTALL DECK IN THREE SPAN LENGTHS WHEREVER POSSIBLE.

G. METAL ROOF DECK:

1. PROVIDE 1-1/2 INCH DEEP, 20 GAGE, WIDE RIB VULCRAFT TYPE B GALVANIZED METAL DECK, OR APPROVED EQUAL, WITH THE FOLLOWING MINIMUM PROPERTIES PER ONE FOOT WIDTH:
   a. Ip = 0.201 IN4 ; In = 0.222 IN4
   b. Sp = 0.234 IN3; Sn = 0.247 IN3

2. PROVIDE POSITIVE ATTACHMENT TO FRAMING MEMBERS WITH 5/8 INCH DIAMETER PUDDLE WELDS AT LAP FLUTES AND 12 INCHES ON CENTER BETWEEN THE LAP FLUTES.

3. PROVIDE (5) #10 TEK SCREW SIDE LAP FASTENERS EQUALLY SPACED BETWEEN SUPPORTS.

4. AT PERIMETER OF DECK, SECURE DECK TO STRUCTURAL MEMBERS WITH SAME ATTACHMENT AND SPACING AS SIDE LAP CONNECTIONS OR PUDDLE WELDS AS NOTED ABOVE.

H. SAFE ROOM METAL DECK:

1. PROVIDE 1-1/2 INCH DEEP, 20 GAGE, WIDE RIB VULCRAFT TYPE C GALVANIZED METAL DECK, OR APPROVED EQUAL, WITH THE FOLLOWING MINIMUM PROPERTIES PER ONE FOOT WIDTH:
   a. Ip = 0.222 IN4 ; In = 0.186 IN4
   b. Sp = 0.231 IN3; Sn = 0.224 IN3

2. PROVIDE POSITIVE ATTACHMENT TO FRAMING MEMBERS WITH 5/8 INCH DIAMETER PUDDLE WELDS AT LAP FLUTES AND 12 INCHES ON CENTER BETWEEN THE LAP FLUTES.

3. PROVIDE (5) #10 TEK SCREW SIDE LAP FASTENERS EQUALLY SPACED BETWEEN SUPPORTS.

4. AT PERIMETER OF DECK, SECURE DECK TO STRUCTURAL MEMBERS WITH SAME ATTACHMENT AND SPACING AS SIDE LAP CONNECTIONS OR PUDDLE WELDS AS NOTED ABOVE.

Texas Department of Transportation

COPYRIGHT © 2021

Jacobs
1999 Bryan Street, Suite 1200
Dallas, Tx 75201

JACOBS ENGINEERING GROUP, INC
TEXAS REGISTRATION #2966

STATE OF TEXAS
GABRIEL A. SERNA
99793
04/21/2021

DALLAS DISTRICT (18)
COLLIN COUNTY
McKinney Area Engineering and Maintenance Facility
2205 TX-5, McKinney, TX 75069
PROJECT NO. 18-470420012

ISSUED: 2021.04.21
DRAWN BY: PA/JS
REVISIONS:

STRUCTURAL NOTES

S0.1

THIS DRAWING CREATED FOR PRODUCTION ON 22"x34" SHEET SIZE. DO NOT SCALE PRINTS.

STEEL JOISTS NOTES

A. PROVIDE OPEN WEB, UNDERSLUNG, PARALLEL CHORD JOISTS UNLESS OTHERWISE NOTED ON THE DRAWINGS.

B. DESIGN, FABRICATE, AND ERECT OPEN WEB STEEL JOISTS TO THE SPECIFICATIONS OF THE STEEL JOIST INSTITUTE, LATEST EDITION.

C. UNLESS OTHERWISE SHOWN, WELD K-SERIES JOISTS TO SUPPORTING BEAMS OR BEARING PLATES WITH 3/16 INCH FILLET WELD, 1-1/2 INCHES LONG ON EACH SIDE OF JOIST SEAT. USE MINIMUM OF 2-3/4 INCH DIAMETER A325N BOLTS AT JOIST CONNECTIONS ON OR NEAREST TO COLUMN LINES.

D. UNLESS OTHERWISE SHOWN, WELD LH OR DLH-SERIES JOISTS TO SUPPORTING BEAMS OR BEARING PLATES WITH 1/4 INCH FILLET WELD, 2 INCHES LONG ON EACH SIDE OF JOIST SEAT. USE MINIMUM OF 2-3/4 INCH DIAMETER A325N CONNECTION BOLTS AT JOIST CONNECTIONS ON OR NEAREST TO COLUMN LINES.

E. PROVIDE JOIST BRIDGING, SIZE, AND SPACING, IN ACCORDANCE WITH STEEL JOIST INSTITUTE. PROVIDE SUPPLEMENTAL BRIDGING AS REQUIRED FOR NET WIND UPLIFT CONDITION.

F. SEE COMPONENTS AND CLADDING WIND FORCES ON SHEET S0.2.NET WIND UPLIFT PRESSURE = (0.9 X DEAD LOAD) + WIND LOAD

G. JOIST SIZES AS SHOWN ON DRAWINGS ARE BASED ON GRAVITY LOAD CAPACITIES. DESIGN JOISTS [AND JOIST GIRDERS] FOR THE GRAVITY LOAD CAPACITIES IN ADDITION TO OTHER LOADS (UPLIFT, AXIAL LOADS, CONCENTRATED LOADS, MOMENTS, ETC.) INDICATED ON DRAWINGS.

H. SHOP DRAWINGS FOR JOISTS AND JOIST ACCESSORIES TO BE PREPARED BY THE JOIST MANUFACTURER'S DETAILERS.

I. SUBMIT DESIGN CALCULATIONS IN ACCORDANCE WITH STEEL JOIST INSTITUTE DESIGN STANDARDS. SUBMIT DESIGN CALCULATIONS SEALED BY A PROFESSIONAL ENGINEER LICENSED IN THE STATE WHERE THE PROJECT IS LOCATED.

J. PROVIDE 2-1/2 INCH MINIMUM BEARING ON STRUCTURAL STEEL FOR K-SERIES JOISTS OR PROVIDE BEARING LENGTHS PER STEEL JOIST INSTITUTE REQUIREMENTS UNLESS GREATER LENGTHS ARE SHOWN ON DRAWINGS.

K. APPLY FULL DEAD LOADS TO JOIST GIRDERS PRIOR TO WELDING THE BOTTOM CHORD STRUTS TO STABILIZER PLATES.

L. PROVIDE SLOPED BEARING ENDS WHERE JOIST SLOPE EXCEEDS 1/4 INCH VERTICAL IN 12 INCH HORIZONTAL DIMENSIONS.

M. PROVIDE TOP AND BOTTOM CHORD EXTENSIONS WHERE INDICATED ON DRAWINGS.

N. WHERE STEEL JOIST ARE USED FOR WIND OR SEISMIC BRACING, DESIGN TOP AND BOTTOM CHORDS FOR THE FORCES INDICATED ON DRAWINGS. THE CONNECTION AT THE TOP AND BOTTOM CHORD CONNECTIONS TO DEVELOP EQUAL FORCES. THE BOTTOM CHORD OF THE MEMBER IS NOT TO BE WELDED UNTIL ALL OF THE FLOOR/ROOF DEAD LOAD IS IN PLACE.

O. DO NOT WELD BOTTOM CHORD CONNECTION TO SUPPORTING MEMBERS UNTIL FLOOR/ROOF DEAD LOAD HAS BEEN APPLIED.

P. IN THE INSTANCE WHERE A SUPPORT BEAM FLANGE IS NOT WIDE ENOUGH TO ACCOMMODATE PROPER BEARING FOR TWO JOISTS SEATS, STAGGER JOISTS AS REQUIRED TO ACHIEVE PROPER BEARING.

SPECIAL INSPECTION NOTES

A. SPECIAL INSPECTIONS ARE TO BE PROVIDED BY AN AGENCY APPROVED BY THE LOCAL BUILDING OFFICIALS AND HIRED BY THE OWNER. SPECIAL INSPECTION IS REQUIRED FOR THE FOLLOWING TYPES OF WORK.

1. ALL CONCRETE WORK FOR STRENGTHS GREATER THAN 2,500 PSI (EXCEPT FOR NON-STRUCTURAL CONCRETE)
2. MASONRY WORK AND DURING ALL GROUTING OPERATIONS
3. BOLTS AND DOWELS INSTALLED IN MASONRY AND CONCRETE
4. ALL FIELD WELDING (EXCEPT METAL STUDS, FURRING CHANNELS, ETC.)
5. ALL WORK INVOLVING HIGH STRENGTH BOLTS
6. BUILDING PAD PREPARATION

A. GENERAL:

1. STRUCTURAL TESTS AND SPECIAL INSPECTIONS SHALL BE PROVIDED IN ACCORDANCE WITH CHAPTER 17 OF THE 2018 INTERNATIONAL BUILDING CODE, THE SPECIAL INSPECTOR SHALL BE A QUALIFIED PERSON OR AGENCY, CONTRACTED BY THE OWNER WHO SHALL DEMONSTRATE COMPETENCE, TO THE SATISFACTION OF THE BUILDING OFFICIAL, FOR INSPECTION OF THE PARTICULAR TYPE OF CONSTRUCTION OR OPERATION REQUIRING SPECIAL INSPECTION.

B. REPORT REQUIREMENTS:

1. THE SPECIAL INSPECTORS SHALL KEEP RECORDS OF SPECIAL INSPECTIONS. THE SPECIAL INSPECTOR SHALL FURNISH INSPECTION REPORTS TO THE BUILDING OFFICIAL AND TO THE REGISTERED DESIGN PROFESSIONAL IN RESPONSIBLE CHARGE. REPORTS SHALL INDICATE THAT WORK INSPECTED WAS DONE IN CONFORMANCE TO THE APPROVED CONSTRUCTION DOCUMENTS. DISCREPANCIES SHALL BE BROUGHT TO THE IMMEDIATE ATTENTION OF THE CONTRACTOR FOR CORRECTION. IF THE DISCREPANCIES ARE NOT CORRECTED, THE DISCREPANCIES SHALL BE BROUGHT TO THE IMMEDIATE ATTENTION OF THE BUILDING OFFICIAL AND TO THE REGISTERED DESIGN PROFESSIONAL IN RESPONSIBLE CHARGE PRIOR TO THE COMPLETION OF THAT PHASE OF THE WORK. A FINAL REPORT DOCUMENTING REQUIRED SPECIAL INSPECTIONS AND CORRECTION OF ANY DISCREPANCIES NOTED IN THE INSPECTIONS SHALL BE SUBMITTED AT A POINT IN TIME AGREED UPON BY THE OWNER AND THE BUILDING OFFICIAL PRIOR TO THE START OF WORK.

MAINTENANCE & WASH BAYS

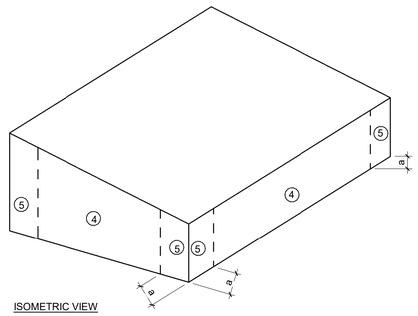

ISOMETRIC VIEW

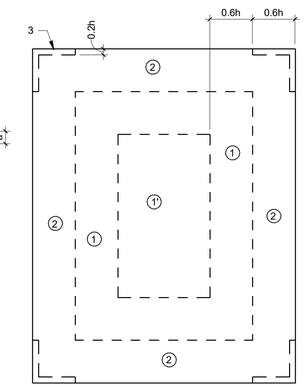

SCHEMATIC ROOF PLAN

ZONE	EFFECTIVE WIND AREA (SQ. FT)						
	10	20	50	100	250	500	1000
1	-42	-39	-36	-33	-29	-27	-27
1'	-24	-24	-24	-24	-20	-17	-17
2	-55	-52	-47	-44	-39	-35	-35
3	-55	-52	-47	-44	-39	-35	-35
1 & 1'	+16	+16	+16	+16	+16	+16	+16
2 & 3	+26	+25	+24	+23	+21	+19	+19
PARAPET	-55 +76	-52 +71	-47 +65	-43 +60	-38 +53	-35 +48	-35 +48
4	-29	-27	-26	-25	-23	-22	-22
5	-35	-33	-30	-28	-24	-22	-22
4 & 5	+26	+25	+24	+23	+21	+20	+20

OFFICE BUILDING & LAB

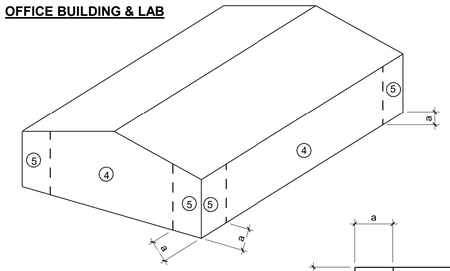

ISOMETRIC VIEW

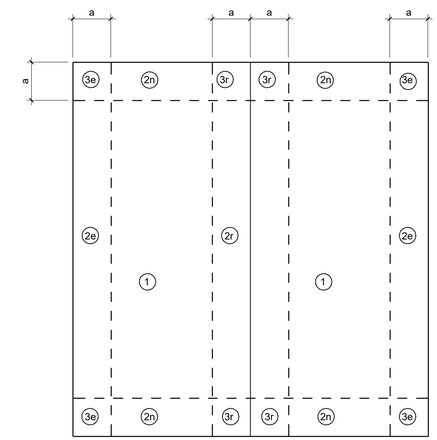

SCHEMATIC ROOF PLAN

ZONE	EFFECTIVE WIND AREA (SQ. FT)						
	10	20	50	100	250	500	1000
1 & 2e	-47	-47	-29	-17	-17	-17	-17
2n, 2r & 3e	-68	-59	-47	-37	-26	-26	-26
3r	-80	-69	-54	-42	-42	-42	-42
ROOF ALL ZONES	+19	+17	+17	+17	+17	+17	+17
OVERHANG 1 & 2e	-53	-53	-41	-32	-32	-32	-32
OVERHANG 2n & 2r	-75	-68	-59	-52	-43	-43	-43
OVERHANG 3e	-87	-76	-60	-48	-32	-32	-32
OVERHANG 3r	-100	-85	-65	-49	-49	-49	-49
4	-28	-26	-25	-24	-22	-21	-21
5	-34	-33	-29	-26	-23	-21	-21
WALL ALL ZONES	+26	+24	+23	+22	+20	+19	+19

NOTES

1. FOR WIND DESIGN PARAMETERS, SEE GENERAL STRUCTURAL NOTES.
2. UNITS ARE POUNDS PER SQUARE FOOT.
3. PLUS AND MINUS SIGNS SIGNIFY PRESSURES ACTING TOWARDS AND AWAY FROM THE SURFACES RESPECTIVELY.
4. a = 10 PERCENT OF LEAST HORIZONTAL DIMENSION, BUT NOT LESS THAN 3 FEET.
5. WALL AND PARAPET FORCES SHALL BE APPLIED INWARD AND OUTWARD AS ALTERNATIVE LOAD CASES.
6. BUILDING SKETCHES SHOWN DO NOT REPRESENT THE ACTUAL BUILDING SHAPE, BUT ARE INTENDED TO SHOW ZONES OF PRESSURE VARIATION.

2 COMPONENTS AND CLADDING WIND FORCES
3/16" = 1'-0"

Texas Department of Transportation

COPYRIGHT © 2021

Jacobs
1999 Bryan Street, Suite 1200
Dallas, Tx 75201
JACOBS ENGINEERING GROUP, INC
TEXAS REGISTRATION #2966

STATE OF TEXAS
GABRIEL A. SERNA
99793
04/21/2021

DALLAS DISTRICT (18)
COLLIN COUNTY
McKinney Area Engineering and Maintenance Facility
2205 TX-5, McKinney, TX 75069
PROJECT NO. 18-4704200012

ISSUED: 2021.04.21
DRAWN BY: PA/JS
REVISIONS:

STRUCTURAL NOTES
S0.2

THIS DRAWING CREATED FOR PRODUCTION ON 22"x34" SHEET SIZE. DO NOT SCALE PRINTS.

PRE-ENGINEERED METAL BUILDING NOTES

A. CODES AND STANDARDS

1. REFER TO "BUILDING AND DESIGN CODES," UNDER GENERAL NOTES SECTION ON THIS PAGE.
2. METAL BUILDING MANUFACTURER'S ASSOCIATION (MBMA) LOW RISE BUILDING SYSTEMS MANUAL. LATEST EDITION ADOPTED BY GOVERNING CODES.

B. THE ENTIRE BUILDING STRUCTURE IS INCLUDED AND COVERS RIGID MOMENT FRAMES, PORTAL MOMENT FRAMES, LONGITUDINAL BRACING, END WALL POST AND BEAMS, INTERIOR COLUMNS, HOIST GIRDERS AND SUPPORTS, WALL PANELS, ROOF PURLINS, ROOF DECK PANELS AND HORIZONTAL CROSS BRACING IN PLANE OF ROOF.

C. DESIGN THE PRE-ENGINEERED METAL BUILDING STRUCTURE TO THE FOLLOWING CRITERIA:

1. VERTICAL DEAD LOAD FOR ROOF (NOT INCLUDING RIGID FRAMES AND PURLINS) MINIMUM 5 PSF.
2. VERTICAL ROOF LIVE LOAD (REDUCIBLE FOR TRIBUTARY AREAS) - 20 PSF
3. GROUND AND FLAT ROOF SNOW LOAD - SEE GENERAL NOTES.
4. SEISMIC LOADING - SEE GENERAL NOTES.
5. LATERAL WIND LOAD - SEE GENERAL NOTES.
6. EQUIPMENT LOADS - CONTRACTOR SHALL REVIEW ALL OTHER DISCIPLINE DRAWINGS (MECHANICAL, ELECTRICAL, PLUMBING, FIRE PROTECTION, ETC) FOR EQUIPMENT THAT WOULD EXCEED THE MINIMUM COLLATERAL LOADING SHOWN BELOW.
7. COLLATERAL LOAD: 5 PSF (MINIMUM)
8. DEFLECTION CRITERIA FOR THE INDICATED DESIGN LOADS, DO NOT EXCEED THE DEFLECTIONS INDICATED BELOW:
   a. ROOF MEMBER VERTICAL DEFLECTION: SPAN/240 LIVE LOAD, SPAN/180 TOTAL LOAD.
   b. WALL SUPPORT/GIRT DEFLECTION FOR MEMBERS SUPPORTING METAL CLADDING: SPAN/180.
   c. HORIZONTAL DRIFT LIMITATION: (INCLUDING DEFLECTION AMPLIFICATION FACTOR FOR SEISMIC LOADS): H/120.

D. REQUIREMENTS

1. PROVIDE NECESSARY PLAN AND ELEVATION DRAWINGS FOR APPROVAL, SHOWING ALL STRUCTURAL FRAMING, AND OTHER SECONDARY FRAMING TO PROVIDE A COMPLETE STRUCTURE.
2. PROVIDE AND SUBMIT FOR REVIEW ALL DESIGN CALCULATIONS AND DRAWINGS. SUCH CALCULATIONS AND DRAWINGS TO BEAR THE SEAL AND SIGNATURE OF A PROFFESIONAL ENGINEER REGISTERED IN THE STATE OF TEXAS.
3. PROVIDE BUILDING CROSS SECTIONS AND ELEVATIONS FOR REVIEW WHICH CLEARLY SHOW THE PRIMARY STRUCTURAL MEMBERS THAT ARE TO BE USED ON THE SUBMITTED BUILDING. SIZE OF ALL STANDARD AISC MEMEBERS AND OF ALL WEB AND FLANGE SECTIONS USED IN BUILT UP MEMBERS SHALL BE NOTED AS WELL AS ALL BOLTS AND WELDING.
4. HEIGHT, WIDTH, AND DEPTH OF ALL MEMBERS MUST BE CLEARLY DIMENSIONED. CLIPS OR CONNECTIONS WELDED TO THE FRAME AT THE MANUFACTURER'S PLANT MUST BE SHOWN AND NOTED. ASTM DESIGNATIONS AND YIELD STRESS OF ALL MATERIAL USED WILL BE INDICATED.
5. INCLUDE DETAILS THAT CLEARLY SHOW GRID FRAME BASE AND OTHER MEMBER-TO-MEMBER CONNECTIONS.
6. EITHER HAND OR COMPUTERIZED CALCULATIONS MAY BE SUBMITTED. COMPUTER PRINTOUTS TO BE FOR THE PARTICULAR BUILDING SUBMITTED AND INDICATING ALL DIMENSIONS, LOADING AND LOADING COMBINATIONS AS WELL AS SIZE AND GEOMETRICAL SECTION PROPERTIES OF MEMBERS DESIGNED. VERTICAL AND HORIZONTAL REACTIONS AT BASE WILL BE DIAGRAMMATICALLY SHOWN, OR CLEARLY INDENTIFIED. CALCULATIONS WILL BE PROVIDED FOR ALL MEMBERS AND CONNECTIONS.
7. SECONDARY FRAMING DESIGN CALCULATIONS MUST INDICATE THE SIZE, SHAPE, AND SECTION PROPERTIES OF ALL LIGHT GAUGE SECTIONS USED FOR PURLINS, GIRTS, OPENING JAMBS, HEADS AND SILL, STRUTS AND BRACING.
8. PORTAL MOMENT FRAMES AND VERTICAL CROSS-BRACING TO BE USED TO RESIST HORIZONTAL WIND AND SEISMIC FORCES. DESIGN OF ALL CONNECTIONS TO BE CLEARLY INDICATED.
9. DESIGN OF HORIZONTAL CROSS-BRACING IN PLANE OF ROOF FRAMING MUST BE COMPLETE AND INDICATE METHOD OF TRANSFERRING TRIBUTARY WIND AND SEISMIC LOAD TO RIGID FRAMES OR TO SIDEWALL PORTAL MOMENT FRAMES AND/OR VERTICAL CROSS-BRACING.

E. LIMIT THE MAXIMUM DRIFT OF BUILDING UNDER CODE LOADS TO SUCH A LEVEL THAT IT DOES NOT CAUSE ANY DAMAGE OR CRACKING TO ANY BUILDING COMPONENTS.

F. METAL ROOFING PANELS:

1. DESIGN OF PRIMARY AND SECONDARY STRUCTURAL MEMBERS AND EXTERIOR COVERING MATERIALS IS TO BE IN ACCORDANCE WITH THE METAL BUILDING MANUFACTURER'S ASSOCIATION (MBMA) "LOW RISE BUILDING SYSTEMS MANUAL" AS APPLICABLE AND ANSI "SPECIFICATIONS OF DESIGN OF COLD FORMED STEEL STRUCTURAL MEMBERS" AS APPLICABLE.
2. DESIGN PANELS TO SUPPORT BOTH VERTICAL DOWNWARD LOADS AND UPLIFT LOAD DUE TO WIND AND SEISMIC FORCES. PROVIDE COMPONENT AND CLADDING DESIGN LOAD DIAGRAMS ON THE DRAWINGS.
3. DECK PANEL DESIGN CALCULATIONS MUST SHOW THE SHAPE, DIMENSIONS, SECTION PROPERTIES AND YIELD STRESS OF THE PARTICULAR DECKING BEING USED.
4. PANELS TO BE OF MATERIAL, TYPE AND FINISH AS NOTED IN THE CONTRACT DOCUMENTS.
5. PANEL ENDS AND EDGES TO BE LAPPED AND FASTENED TOGETHER.
6. PANELS TO BE PROPERTY POSITIONED AND ALIGNED.
7. PANEL-TO-STRUCTURAL MEMBERS AND PANEL-TO-PANEL FASTENERS MUST BE MADE WITH A POSITIVE CONNECTION AT EACH PURLIN AND EACH SIDE LAP. PROVIDE FASTENERS WHICH HAVE A CAPACITY TO RESIST THE APPROPRIATE TRIBUTARY UPLIFT FORCE AND ARE OF A TYPE WHICH PERMITS THERMAL MOVEMENT (EXPANSION AND CONTRACTION) TO TAKE PLACE WITHOUT DETRIMENTAL EFFECT TO THE ROOF PANEL AND STRUCTURE.
8. OPENINGS THROUGH ROOF PANELS MUST BE STRUCTURALLY ANALYZED HEADERS AND PURLINS OF PROPER SIZE AND STRENGTH TO SUPPORT TRIBUTARY VERTICAL LOADS TO BE PROVIDED.

G. ALL COLUMN BASE PLATES MUST BE SET AND GROUTED FOR FULL CONTACT BEARING.

H. ALL BASES FOR THE COLUMNS TO BE "PINNED" AND NOT ASSUMED AS FIXED. NO MOMENT FORCES TO BE TRANSFERRED INTO THE BUILDING FOUNDATION.

I. PROVIDE DESIGN AND LAYOUT REQUIREMENTS OF ALL ANCHOR RODS AT COLUMN BASES TAKING INTO CONSIDERATION AVAILABLE EDGE DISTANCES AS SHOWN ON FOUNDATION DRAWINGS.

J. THE DESIGN OF FOUNDATIONS IS BASED ON THE LOADS AND ASSUMED BRACING CONFIGURATIONS SHOWN ON THE DRAWINGS. SUBMIT THE FINAL COLUMN REACTIONS FOR ENGINEER'S REVIEW OF THE FOUNDATION DESIGN.

K. TO THE EXTENT POSSIBLE, DESIGN STRUCTURE TO BE ASSEMBLED BY FIELD BOLTING TO MINIMIZE FIELD WELDING.

Texas Department of Transportation

COPYRIGHT © 2021

Jacobs
1999 Bryan Street, Suite 1200
Dallas, Tx 75201

JACOBS ENGINEERING GROUP, INC
TEXAS REGISTRATION #2966

GABRIEL A. SERNA
99793
04/21/2021

DALLAS DISTRICT (18)
COLLIN COUNTY
McKinney Area Engineering and Maintenance Facility
2205 TX-5, McKinney, TX 75069
PROJECT NO. 18-4704200012

ISSUED: 2021.04.21
DRAWN BY: GP
REVISIONS:

STRUCTURAL NOTES

S0.3

THIS DRAWING CREATED FOR PRODUCTION ON 22"x34" SHEET SIZE. DO NOT SCALE PRINTS.

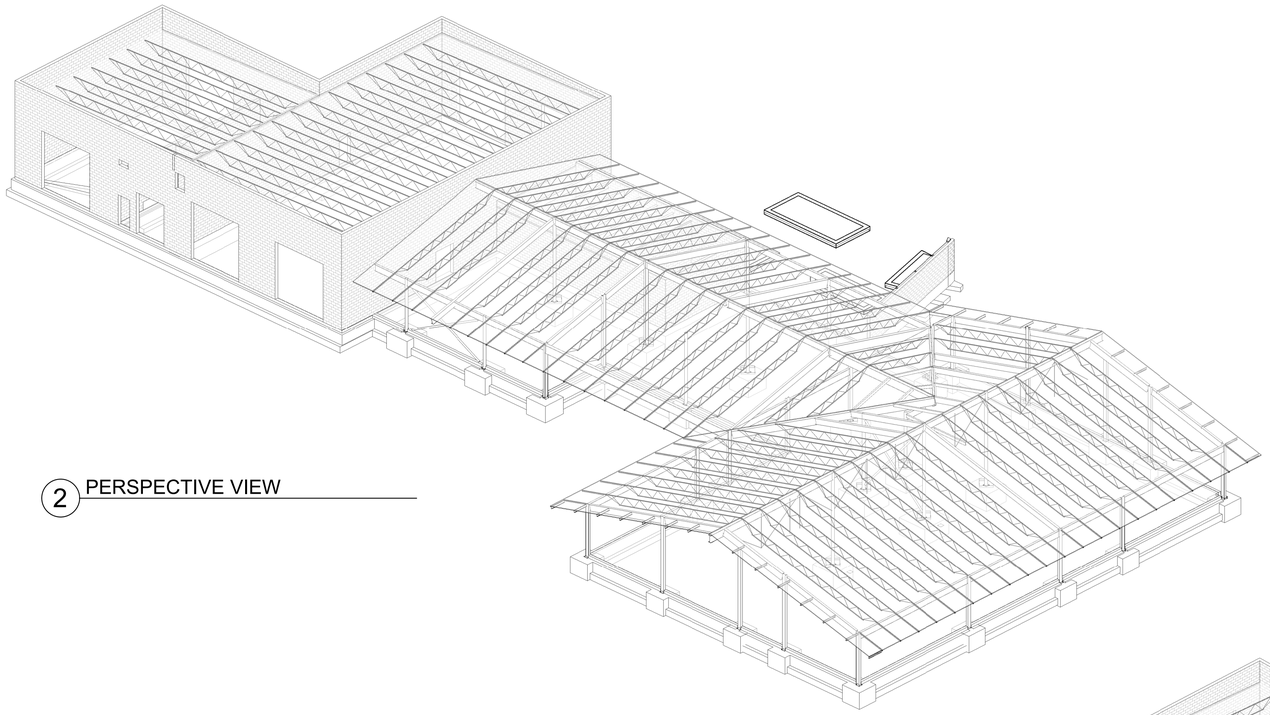

2 PERSPECTIVE VIEW

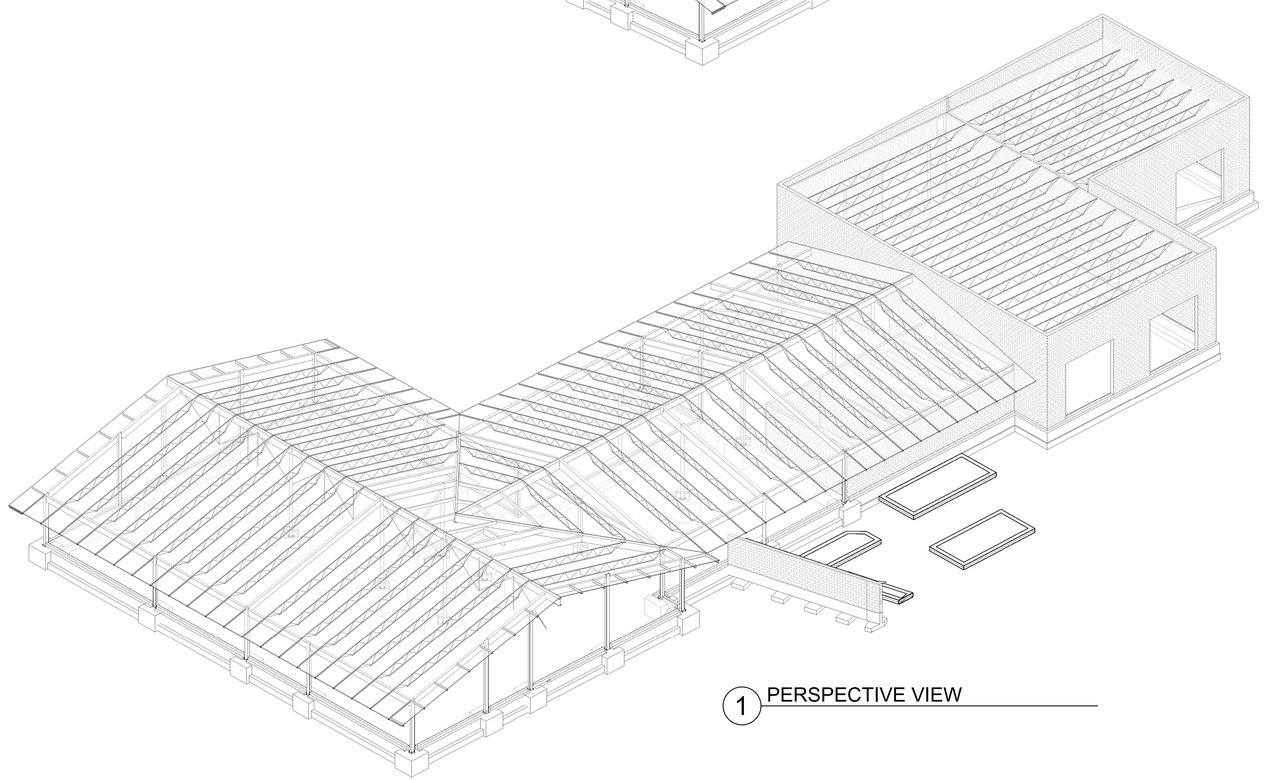

1 PERSPECTIVE VIEW

Texas Department of Transportation
COPYRIGHT © 2021

Jacobs
1999 Bryan Street, Suite 1200
Dallas, Tx 75201

JACOBS ENGINEERING GROUP, INC
TEXAS REGISTRATION #2966

STATE OF TEXAS
GABRIEL A. SERNA
99793
04/21/2021

DALLAS DISTRICT (18)
COLLIN COUNTY
McKinney Area Engineering and Maintenance Facility
2205 TX-5, McKinney, TX 75069
PROJECT NO. 18-4704200012

ISSUED: 2021.04.21
DRAWN BY: GP
REVISIONS:

PERSPECTIVE VIEWS

S0.4

THIS DRAWING CREATED FOR PRODUCTION ON 22"x34" SHEET SIZE. DO NOT SCALE PRINTS.

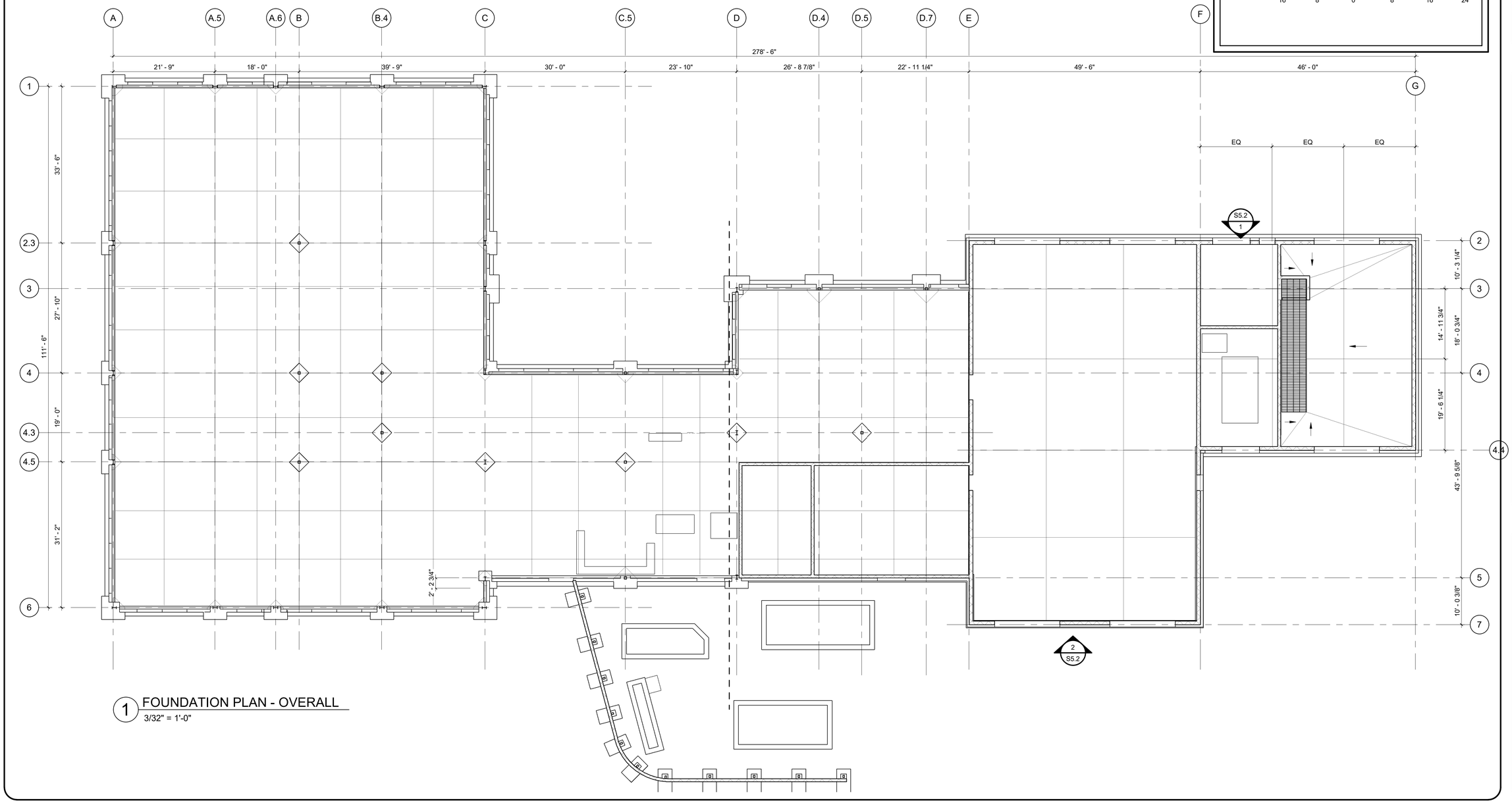

1 FOUNDATION PLAN - OVERALL
3/32" = 1'-0"

KEYPLAN

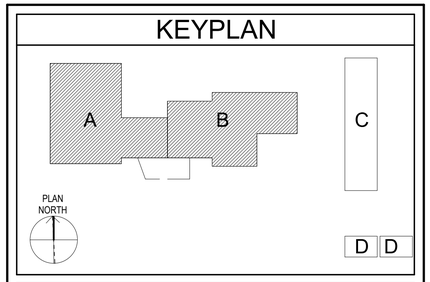

SCALES

3/32" = 1'-0"

16' 8' 0' 8' 16' 24'

Texas Department of Transportation

COPYRIGHT © 2021

Jacobs
1999 Bryan Street, Suite 1200
Dallas, Tx 75201

JACOBS ENGINEERING GROUP, INC
TEXAS REGISTRATION #2966

GABRIEL A. SERNA
99793
04/21/2021

DALLAS DISTRICT (18)
COLLIN COUNTY
McKinney Area Engineering and Maintenance Facility
2205 TX-5, McKinney, TX 75069
PROJECT NO. 18-4704200012

ISSUED: 2021.04.21
DRAWN BY: GP
REVISIONS:

FOUNDATION PLAN OVERALL

S1.1

THIS DRAWING CREATED FOR PRODUCTION ON 22"x34" SHEET SIZE. DO NOT SCALE PRINTS.

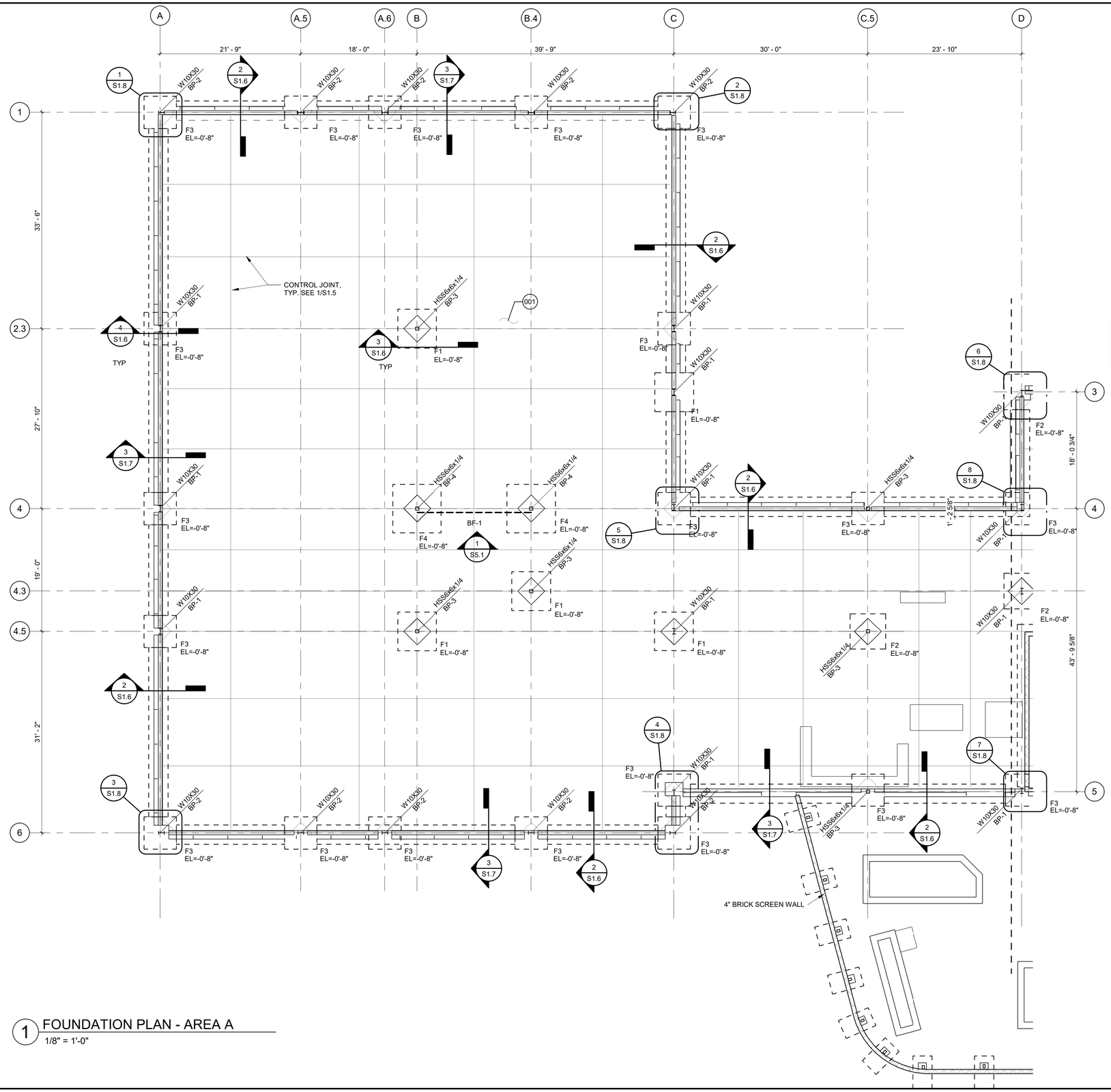

1 FOUNDATION PLAN - AREA A

1/8" = 1'-0"

KEYPLAN

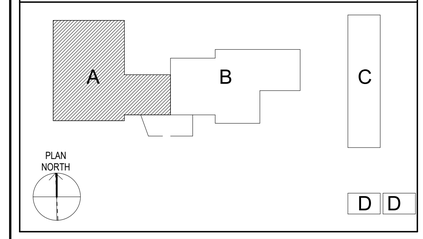

SCALES

1/8" = 1'-0"

8' 6' 4' 2' 0' 4' 8' 16'

KEY NOTES

001	5" THICK SLAB-ON-GRADE OVER 15 MIL VAPOR RETARDER OVER PREPARED SUBGRADE. REINFORCE SLAB WITH #4 @ 16" ON CENTER EACH WAY AT TOP OF SLAB. TOP OF SLAB ELEVATION = 0'-0" UNLESS OTHERWISE NOTED.

PLAN NOTES

1.	FINISH FLOOR ELEVATION = 0'-0" CORRESPONDS TO ACTUAL ELEVATION = 610.60', RE: CIVIL
2.	- - - - - INDICATES BRACED FRAME. SEE SHEET S5.1 FOR BRACED FRAMED ELEVATIONS
3.	"Fx" INDICATES FOOTING TYPE. SEE SHEET S1.7 FOR FOOTING SCHEDULE
4.	BPx INDICATES BASE PLATE TYPE, RE: S2.10
5.	RE: S0.1 THROUGH S0.3 FOR STRUCTURAL GENERAL NOTES
6.	RE: S1.5 FOR TYPICAL FOUNDATION DETAILS
7.	RE: S2.10 FOR TYPICAL STEEL SECTIONS AND DETAILS
8.	RE: S4.10 FOR TYPICAL MASONRY SECTIONS AND DETAILS
9.	ALL COLUMNS SHALL BE CENTERED ON GRIDLINES UNLESS OTHERWISE NOTED
10.	ALL SPREAD FOOTINGS SHALL BE CENTERED UNDER COLUMN CENTERLINES UNLESS OTHERWISE NOTED
11.	RE: ARCH AND MEP DRAWINGS FOR LOCATIONS OF OPENINGS, PENETRATIONS, CURBS, SLAB SLOPES AND DEPRESSIONS

Texas Department of Transportation
COPYRIGHT © 2021

Jacobs
1999 Bryan Street, Suite 1200
Dallas, Tx 75201
JACOBS ENGINEERING GROUP, INC
TEXAS REGISTRATION #2966
STATE OF TEXAS
GABRIEL A. SERNA
99793
LICENSED
PROFESSIONAL ENGINEER
04/21/2021

DALLAS DISTRICT (18)
COLLIN COUNTY
McKinney Area Engineering and Maintenance Facility
2205 TX-5, McKinney, TX 75069
PROJECT NO. 18-470420001 2

ISSUED: 2021.04.21
DRAWN BY: GP
REVISIONS:

FOUNDATION PLAN AREA A

S1.2

THIS DRAWING CREATED FOR PRODUCTION ON 22"x34" SHEET SIZE. DO NOT SCALE PRINTS.

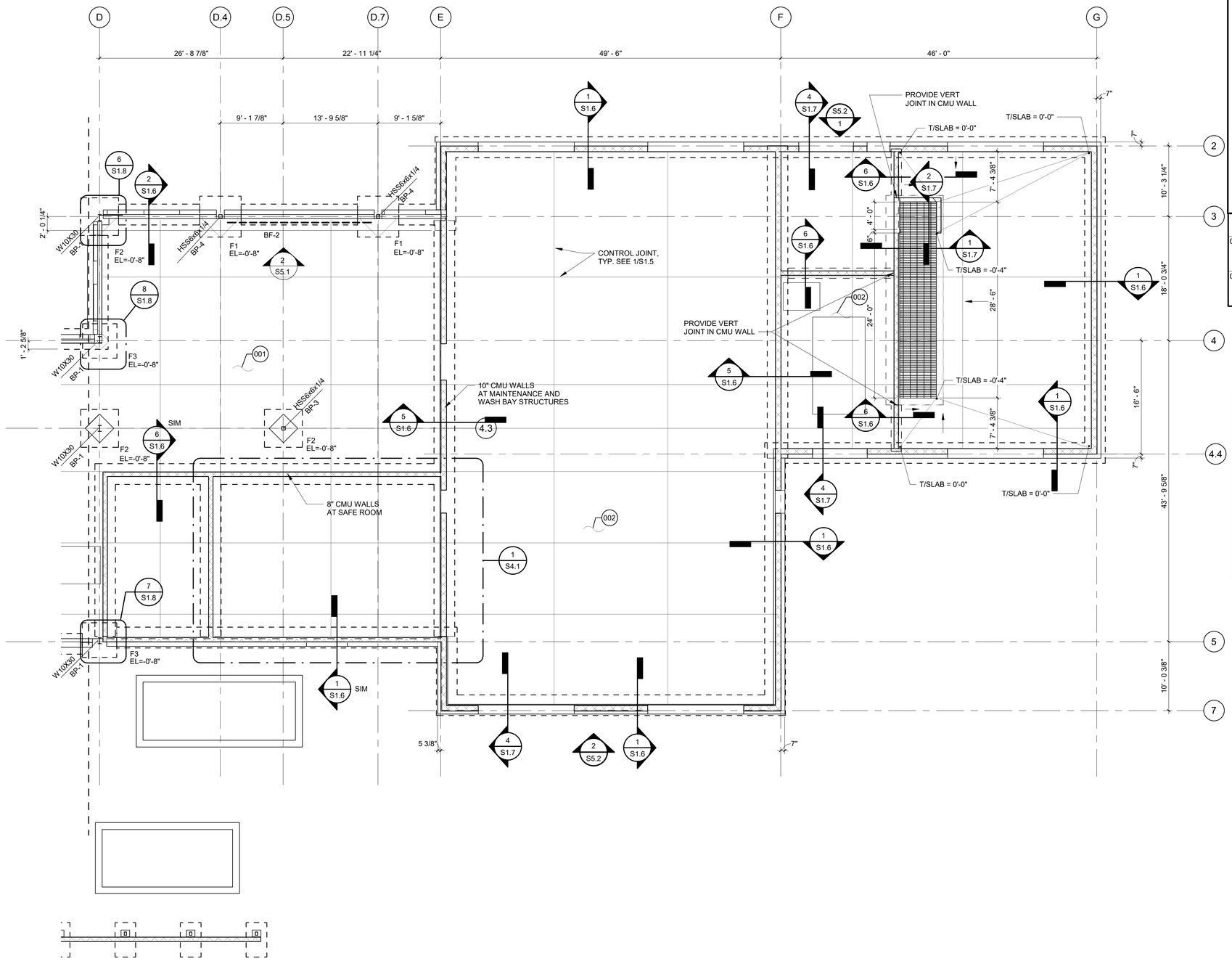

1 FOUNDATION PLAN - AREA B

1/8" = 1'-0"

KEYPLAN

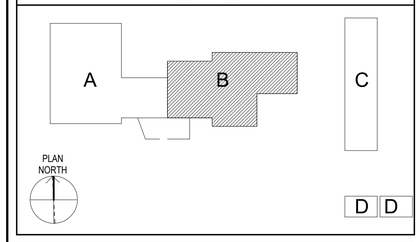

SCALES

1/8" = 1'-0"

8' 6' 4' 2' 0' 4' 8' 16'

KEY NOTES

001	5" THICK SLAB-ON-GRADE OVER 15 MIL VAPOR RETARDER OVER PREPARED SUBGRADE. REINFORCE SLAB WITH #4 @ 16" ON CENTER EACH WAY AT TOP OF SLAB. TOP OF SLAB ELEVATION = 0'-0" UNLESS OTHERWISE NOTED.
002	8" THICK SLAB-ON-GRADE OVER 15 MIL VAPOR RETARDER OVER PREPARED SUBGRADE. REINFORCE SLAB WITH #5 @ 12" ON CENTER EACH WAY AT TOP OF SLAB. TOP OF SLAB ELEVATION = 0'-0" UNLESS OTHERWISE NOTED.

PLAN NOTES

1.	FINISH FLOOR ELEVATION = 0'-0" CORRESPONDS TO ACTUAL ELEVATION = 610.60', RE: CIVIL
2.	- - - - - INDICATES BRACED FRAME. SEE SHEET S5.1 FOR BRACED FRAMED ELEVATIONS
3.	"Fx" INDICATES FOOTING TYPE. SEE SHEET S1.7 FOR FOOTING SCHEDULE
4.	BPx INDICATES BASE PLATE TYPE, RE: S2.10
5.	RE: S0.1 THROUGH S0.3 FOR STRUCTURAL GENERAL NOTES
6.	RE: S1.5 FOR TYPICAL FOUNDATION DETAILS
7.	RE: S2.10 FOR TYPICAL STEEL SECTIONS AND DETAILS
8.	RE: S4.10 FOR TYPICAL MASONRY SECTIONS AND DETAILS
9.	ALL COLUMNS SHALL BE CENTERED ON GRIDLINES UNLESS OTHERWISE NOTED
10.	ALL SPREAD FOOTINGS SHALL BE CENTERED UNDER COLUMN CENTERLINES UNLESS OTHERWISE NOTED
11.	RE: ARCH AND MEP DRAWINGS FOR LOCATIONS OF OPENINGS, PENETRATIONS, CURBS, SLAB SLOPES AND DEPRESSIONS

Texas Department of Transportation
COPYRIGHT © 2021

Jacobs
1999 Bryan Street, Suite 1200
Dallas, Tx 75201
JACOBS ENGINEERING GROUP, INC
TEXAS REGISTRATION #2966
GABRIEL A. SERNA
99793
04/21/2021

DALLAS DISTRICT (18)
COLLIN COUNTY
McKinney Area Engineering and Maintenance Facility
2205 TX-5, McKinney, TX 75069
PROJECT NO. 18-470420012

ISSUED: 2021.04.21
DRAWN BY: GP
REVISIONS:

FOUNDATION PLAN AREA B

S1.3

THIS DRAWING CREATED FOR PRODUCTION ON 22"x34" SHEET SIZE. DO NOT SCALE PRINTS.

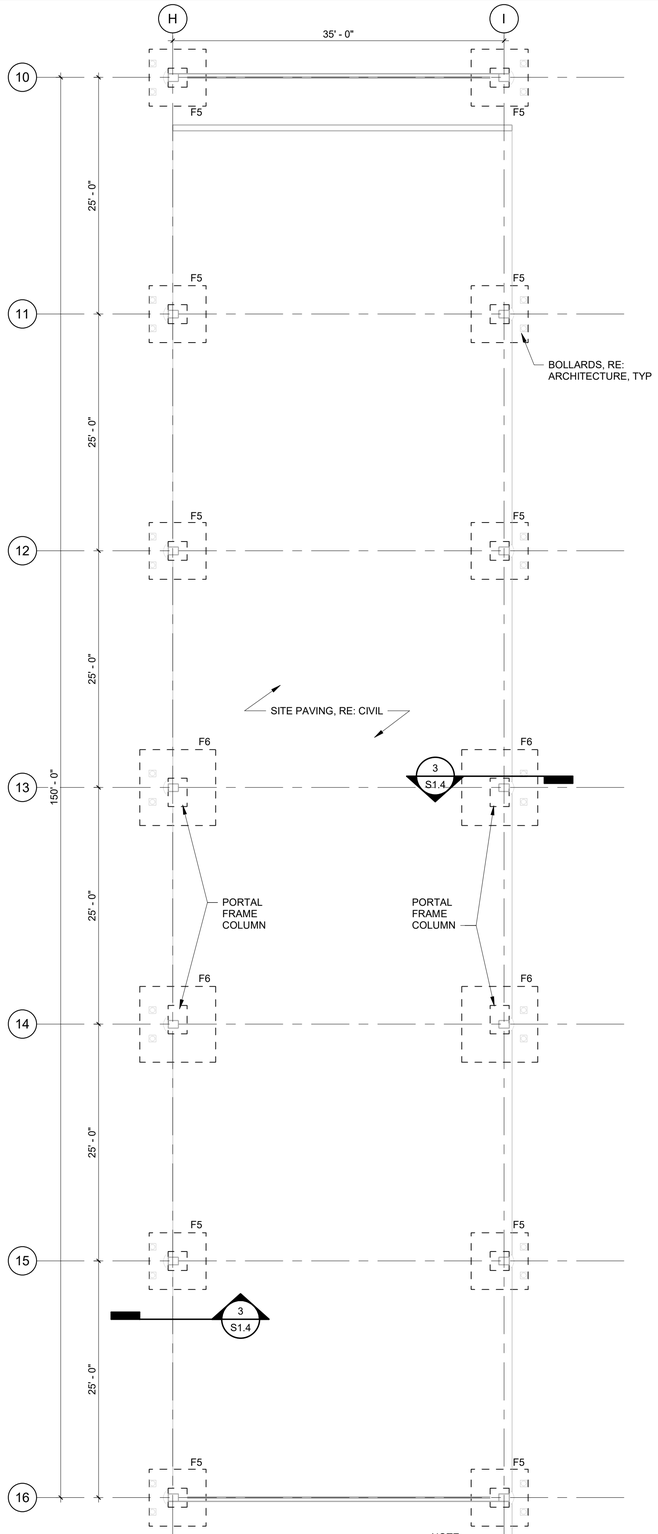

1 FOUNDATION PLAN - AREA C
1/8" = 1'-0"

NOTE:
RE: CIVIL FOR LOCATION AND ORIENTATION.

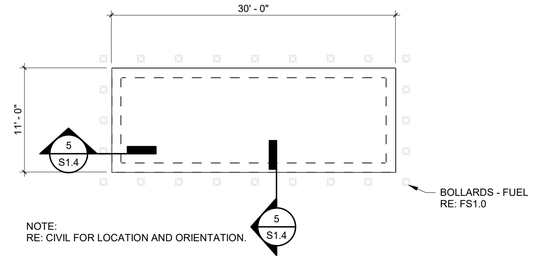

NOTE:
RE: CIVIL FOR LOCATION AND ORIENTATION.

2 FOUNDATION PLAN - AREA D1
1/8" = 1'-0"

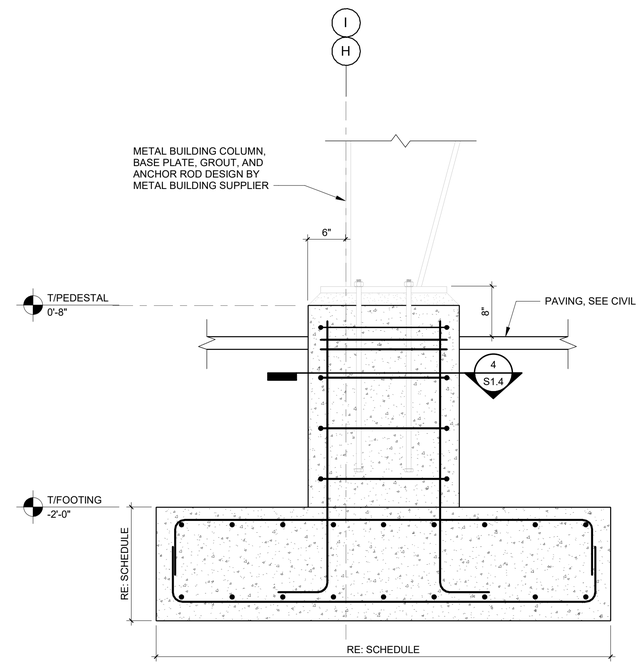

3 TYPICAL FOOTING SECTION
1" = 1'-0"

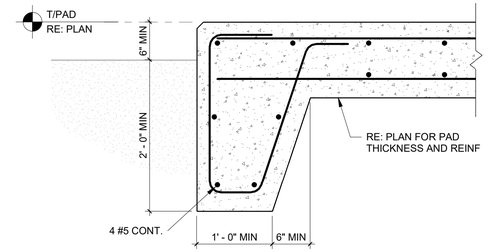

5 THICKENED SLAB SECTION
1" = 1'-0"

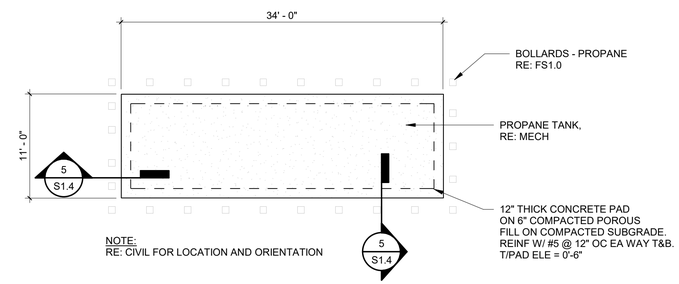

NOTE:
RE: CIVIL FOR LOCATION AND ORIENTATION

6 FOUNDATION PLAN - AREA D2
1/8" = 1'-0"

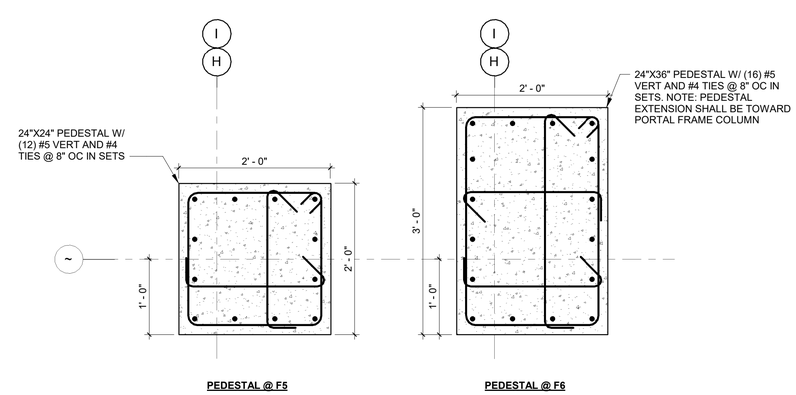

4 PEDESTAL DETAILS
1" = 1'-0"

KEYPLAN

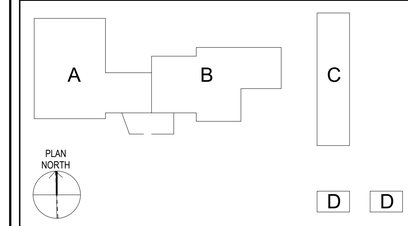

SCALES

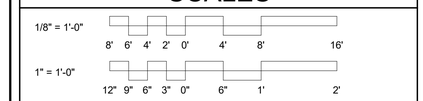

KEY NOTES

Texas Department of Transportation
COPYRIGHT © 2021

Jacobs
1999 Bryan Street, Suite 1200
Dallas, Tx 75201
JACOBS ENGINEERING GROUP, INC
TEXAS REGISTRATION #2966
GABRIEL A. SERNA
99793
04/21/2021

DALLAS DISTRICT (18)
COLLIN COUNTY
McKinney Area Engineering and Maintenance Facility
2205 TX-5, McKinney, TX 75069
PROJECT NO. 18-470420012

ISSUED: 2021.04.21
DRAWN BY: JI
REVISIONS:

FOUNDATION PLAN AREAS C AND D

S1.4

THIS DRAWING CREATED FOR PRODUCTION ON 22"x34" SHEET SIZE DO NOT SCALE PRINTS.

CONSTRUCTION JOINT

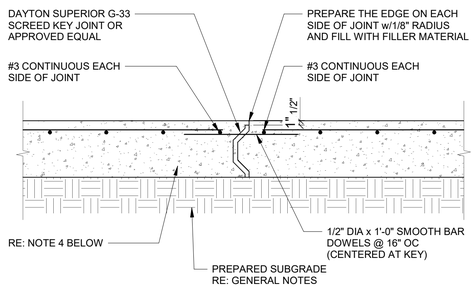

CONSTRUCTION JOINT NOTES:
1. REFER TO PLAN FOR SLAB THICKNESS (T) AND REINFORCEMENT.
2. SLAB REINFORCEMENT SHALL BE CHAIRED BY SOIL SUPPORT SLAB BOLSTERS.
3. DO NOT USE THE KEY JOINT FOR SCREEDING.
4. BREAK BOND BETWEEN NEW AND PREVIOUSLY PLACED SLAB BY SPRAYING OR PAINTING THE EXPOSED SIDE OF THE KEY AND DOWEL WITH CURING COMPOUND, ASPHALTIC EMULSION OR FORM OIL.
5. REFER TO GENERAL NOTES, GENERAL SPECIFICATIONS, AND DRAWINGS FOR SUB-FLOOR DRAINAGE SYSTEM, SUBGRADE PREPARATION AND OR MUD LSAB AND VAPOR BARRIER REQUIREMENTS.
6. SUBGRADE SHALL BE FREE OF STANDING WATER AT THE TIME OF CONCRETE PLACEMENT.
7. LONG STRIP CONSTRUCTION METHOD SHALL BE USED IN PLACING CONCRETE FOR ALL SLABS ON GRADE. REFER TO SCHEMATIC PLAN FOR CONCRETE PLACING SEQUENCE.

JOINT SPACING NOTE:
1. PROVIDE CONTROL AND/OR CONSTRUCTION JOINTS AT EVERY COLUMN LINE AND IN BETWEEN THE COLUMN LINES SUCH THAT THE JOINT SPACING DOES NOT EXCEED 20 FEET, UNLESS OTHERWISE NOTED. SUBMIT JOINT PLAN FOR ENGINEER'S APPROVAL.

1 TYPICAL CONSTRUCTION/CONTROL JOINT SLAB-ON-GRADE
3/4" = 1'-0"

CONTROL JOINT/SAWCUT

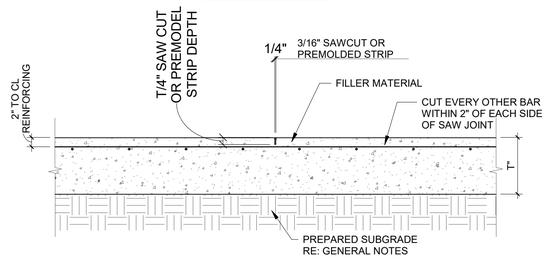

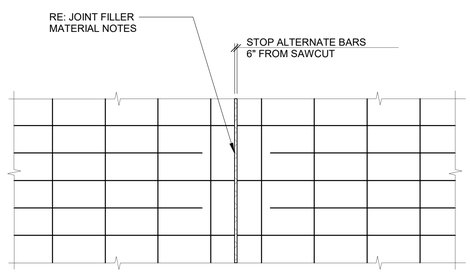

SAW CONTROL NOTES:
1. MAKE SAWCUT AS SOON AS SLAB IS ABLE TO SUPPORT THE WEIGHT OF WORKERS AND SAWING EQUIPMENT WITHOUT DAMAGE TO FINISH SURFACE OF SLAB. SAWCUTS ARE TO BE MADE ABSOLUTELY PRIOR TO THE NEXT MORNING AFTER PLACEMENT.
2. CLEAN JOINT PRIOR TO FILLING JOINT.

OPTIONAL CONTROL JOINT

NOTE: CONCRETE POURED BOTH SIDES IN SAME POUR.

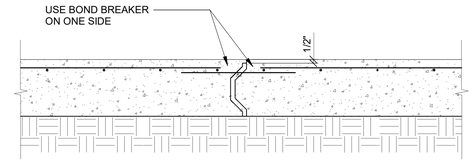

RE: CONSTRUCTION JOINT DETAIL FOR KEY TYPE, DOWEL REINFORCEMENT, BOND BREAKER, JOINT EDGING AND FILLER MATERIAL.

FORMED CONTROL JOINT NOTES:
1. FORM CONTROL JOINTS BY INSERTING PRE-MOLDED STRIP INTO FRESH CONCRETE UNTIL TOP SURFACE OF STRIP IS FLUSH WITH SLAB SURFACE.
2. TOOL SLAB EDGES ROUND ON EACH SIDE OF INSERT.
3. AFTER CONCRETE HAS CURED, REMOVE INSERTS AND CLEAN GROOVE OF LOOSE DEBRIS.

DOWEL NOTES:
1. ALL DOWELS SHALL CONFORM TO ASTM A615.
2. DOWELS SHALL BE CAREFULLY ALIGNED AND SUPPORTED DURING CONCRETING OPERATIONS.

JOINT FILLER MATERIAL NOTES:
1. FILLER MATERIAL SHALL HAVE A MINIMUM SHORE HARDNESS OF 35, AND SHALL CONFORM TO ASTM D2240. JOINT FILLER SHALL BE APPROVED BY ENGINEER PRIOR TO APPLICATION. APPROVED JOINT FILLER IS VULKEM 245 AS MANUFACTURED BY MAMECO INTERNATIONAL OR APPROVED EQUAL.
2. WHERE POSSIBLE, FILLER MATERIAL SHALL BE APPLIED WHEN BUILDING IS UNDER PERMANENT TEMPERATURE CONTROL. THIS SHALL BE EITHER AT THE END OF CONSTRUCTION OF THE COMPLETE BUILDING SHELL, OR A MINIMUM OF 90 DAYS AFTER SLAB CONSTRUCTION.
3. FOLLOW STRICTLY THE MANUFACTURER'S RECOMMENDED PROCEDURES FOR APPLYING THE JOINT FILLER.

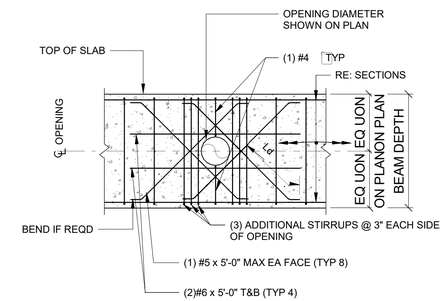

NOTES:
1. THE ADDITIONAL REINF SHOWN ABOVE IS APPLICABLE TO OPENING 12"x12". FOR LARGER OPENINGS, RE: SCHEDULE.
2. LOCATE OPENING AT MID DEPTH OF BEAM UON ON PLAN. IF A (X") DIMENSION IS SHOWN WITH OPENING, THIS DIMENSION IS FROM TOP OF SLAB TO CENTER OF OPENING.

2 TYPICAL REINFORCING THROUGH CONCRETE GRADE BEAM
3/4" = 1'-0"

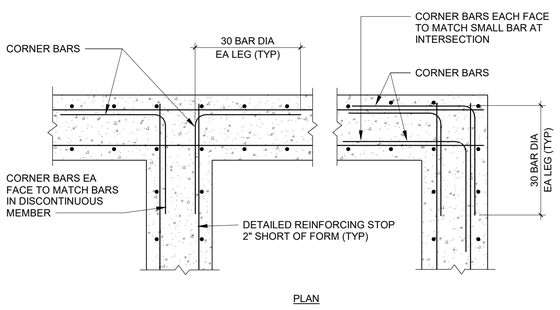

CORNER BARS AT WALL OR GRADE BEAM INTERSECTION

DETAIL NOTE:
1. PROVIDE CORNER BARS TO MATCH SIZE AND LOCATION OF ALL HORIZONTAL GRADE BEAM AND WALL BARS EXCEPT HOOKED TOP AND BOTTOM BARS

3 TYPICAL CORNER BAR DETAIL
3/4" = 1'-0"

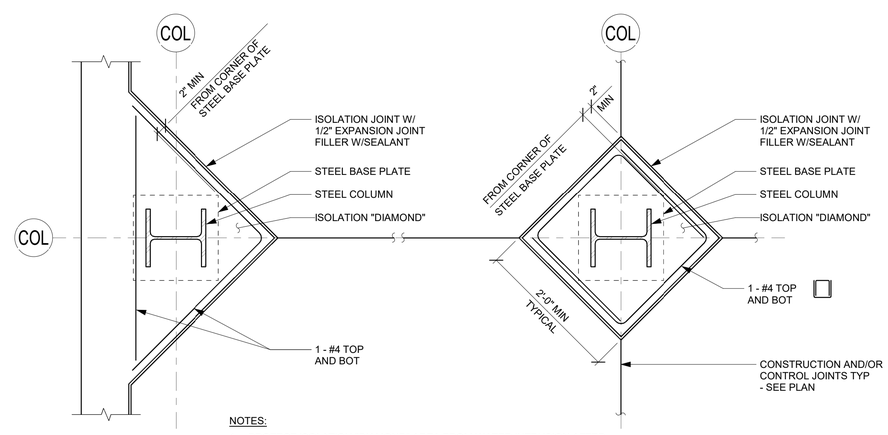

NOTES:
1. PROTECT ISOLATION "DIAMOND" AREA FROM WATER INTRUSION AFTER PLACEMENT OF SLABS AND PRIOR TO PLACEMENT OF "DIAMOND". PLACE "DIAMOND" NO MORE THAN TWO WEEKS AFTER PLACEMENT OF SLABS.

4 SLAB-ON-GRADE AT TYPICAL EXTERIOR/INTERIOR COLUMN
NTS

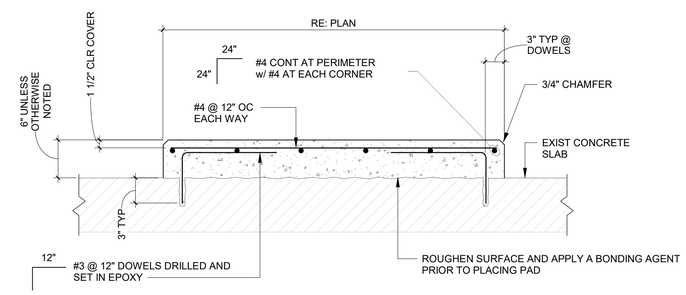

NOTES:
1. CONFIRM REQUIRED SIZE AND LOCATION OF ALL HOUSEKEEPING PADS WITH EQUIPMENT MANUFACTURER'S PRIOR TO PLACEMENT OF CONCRETE. PROVIDE PADS AS REQUIRED, WHETHER SHOWN ON STRUCTURAL DRAWINGS OR NOT.
2. WHERE REQUIRED, COORDINATE HOUSEKEEPING PAD WITH ARCH AND MECHANICAL SO PENETRATIONS ARE PLACED BEFORE CONCRETE IS POURED.

ENGINEER'S NOTE:
DOWELS ARE ONLY REQUIRED WHERE HEAVY EQUIPMENT VIBRATION OR SEISMIC FORCES ARE A CONCERN. DOWELS SHOULD BE OMITTED FOR MOST APPLICATIONS.

5 SECTION AT MECHANICAL EQUIPMENT HOUSEKEEPING PAD
1" = 1'-0"

Texas Department of Transportation
COPYRIGHT © 2021

Jacobs
1999 Bryan Street, Suite 1200
Dallas, Tx 75201
JACOBS ENGINEERING GROUP, INC
TEXAS REGISTRATION #2966
GABRIEL A. SERNA 99793 04/21/2021

DALLAS DISTRICT (18)
COLLIN COUNTY
McKinney Area Engineering and Maintenance Facility
2205 TX-5, McKinney, TX 75069
PROJECT NO. 18-4704200012

ISSUED: 2021.04.21
DRAWN BY: Author
REVISIONS:

TYPICAL FOUNDATION AND CONCRETE DETAILS

S1.5

THIS DRAWING CREATED FOR PRODUCTION ON 22"x34" SHEET SIZE. DO NOT SCALE PRINTS.

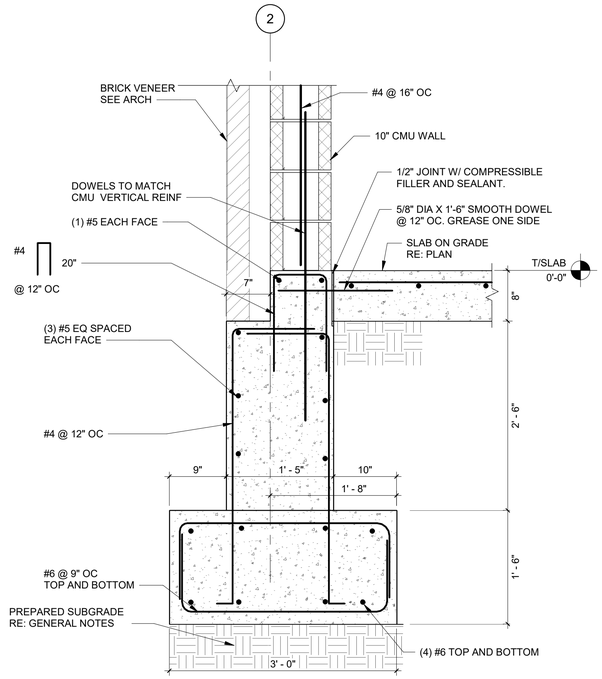

1 SECTION AT PERIMETER - MAINTENANCE AND WASH BUILDINGS

1" = 1'-0"

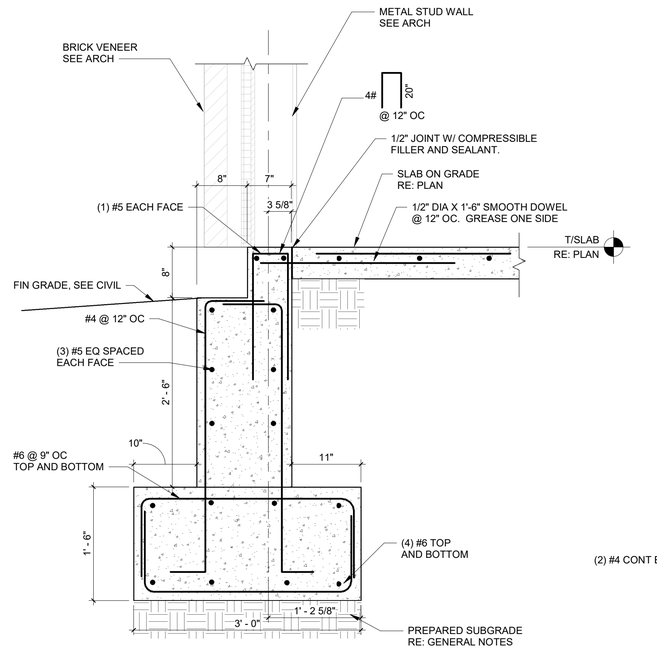

2 SECTION AT PERIMETER - OFFICE BUILDING

1" = 1'-0"

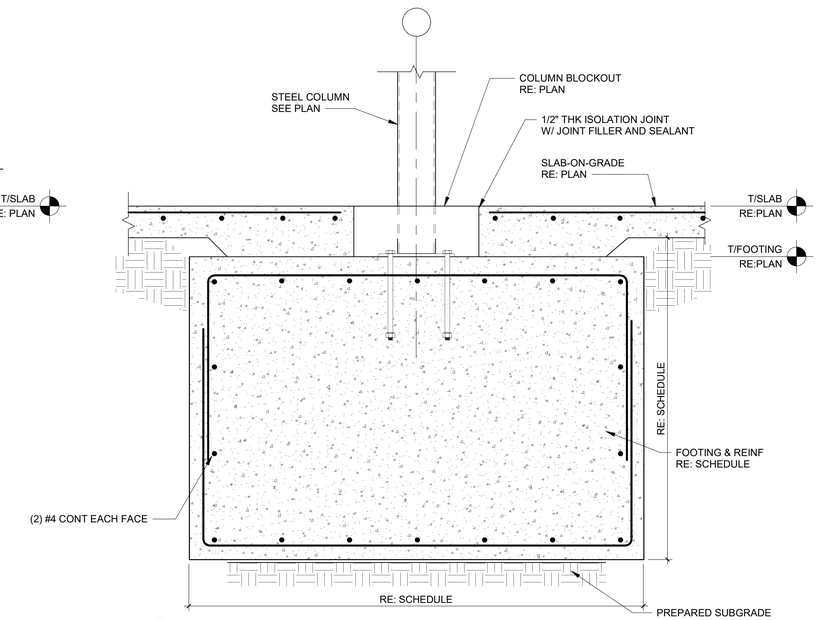

3 SECTION AT INTERIOR COLUMN

1" = 1'-0"

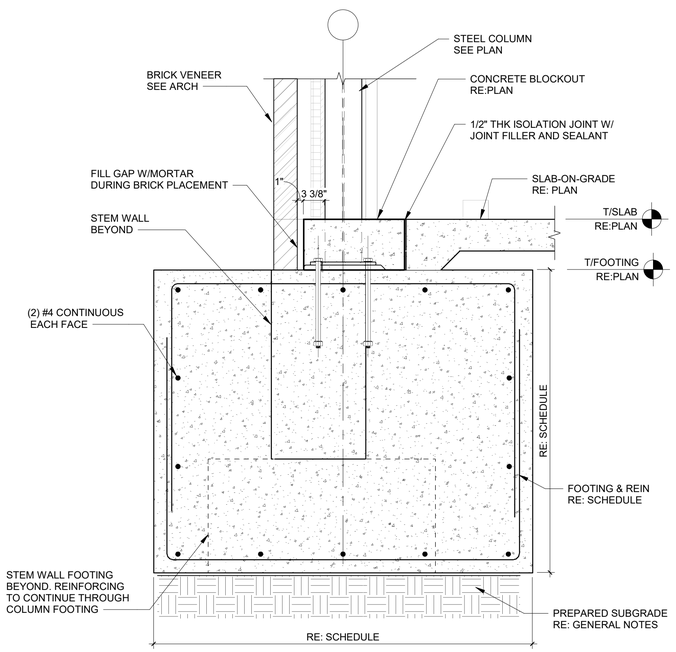

4 PERIMETER FOUNDATION SECTION AT COLUMNS

1" = 1'-0"

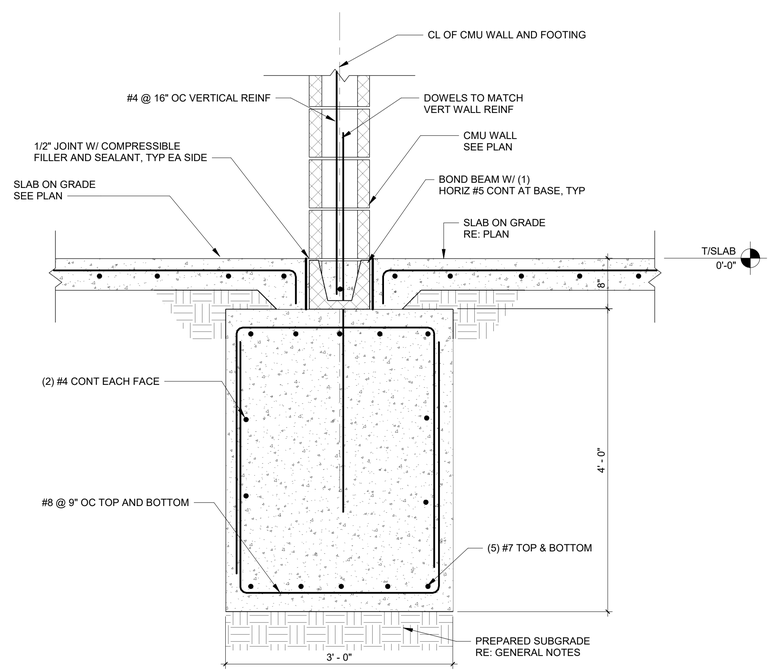

5 SECTION AT INTERIOR CMU WALL

1" = 1'-0"

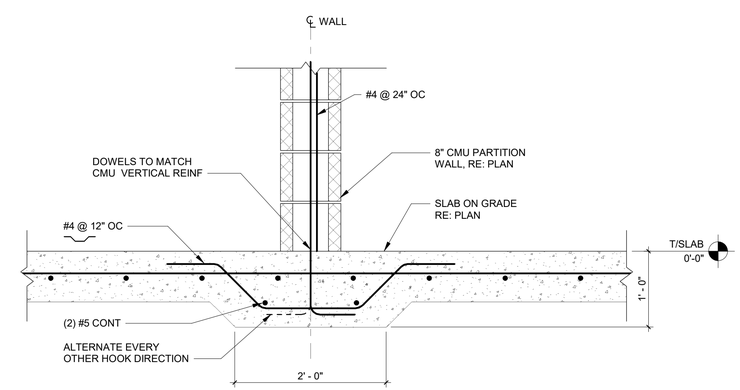

6 SECTION AT CMU PARTITION WALL

1" = 1'-0"

Texas Department of Transportation

COPYRIGHT © 2021

Jacobs
1999 Bryan Street, Suite 1200
Dallas, Tx 75201
JACOBS ENGINEERING
GROUP, INC
TEXAS REGISTRATION #2966

GABRIEL A. SERNA
99793
04/21/2021

DALLAS DISTRICT (18)
COLLIN COUNTY
McKinney Area Engineering and Maintenance Facility
2205 TX-5, McKinney, TX 75069
PROJECT NO. 18-4704300012

ISSUED: 2021.04.21
DRAWN BY: GP
REVISIONS:

FOUNDATION SECTIONS AND DETAILS

S1.6

THIS DRAWING CREATED FOR PRODUCTION ON 22"x34" SHEET SIZE. DO NOT SCALE PRINTS.

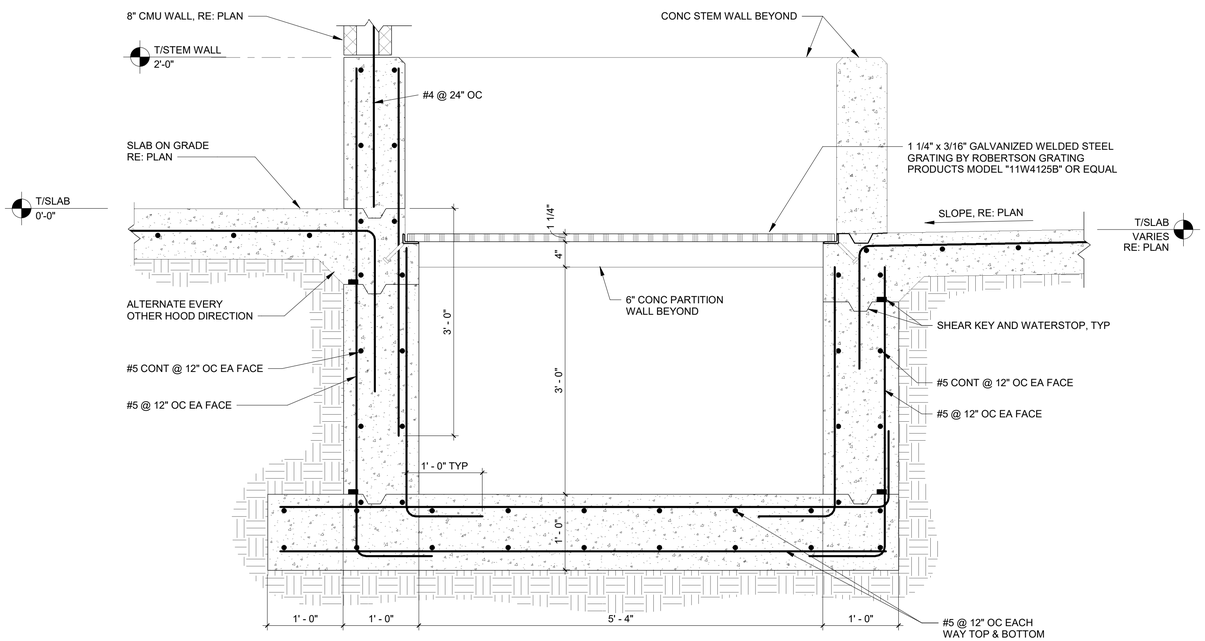

1 PIT SECTION
1" = 1'-0"

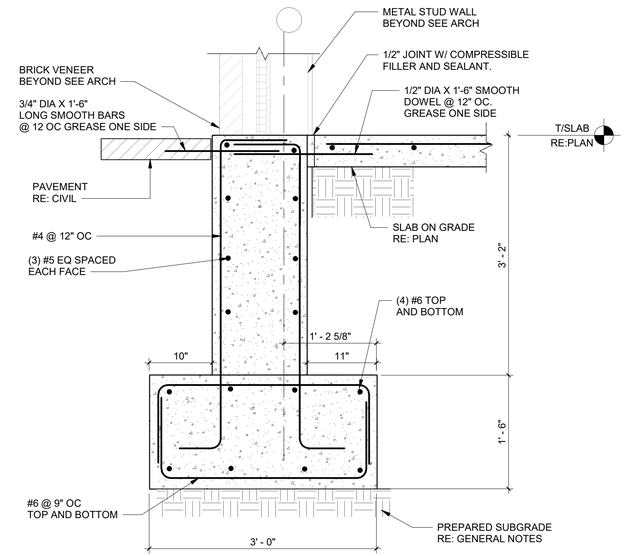

3 SECTION AT DOOR - OFFICE BUILDING
1" = 1'-0"

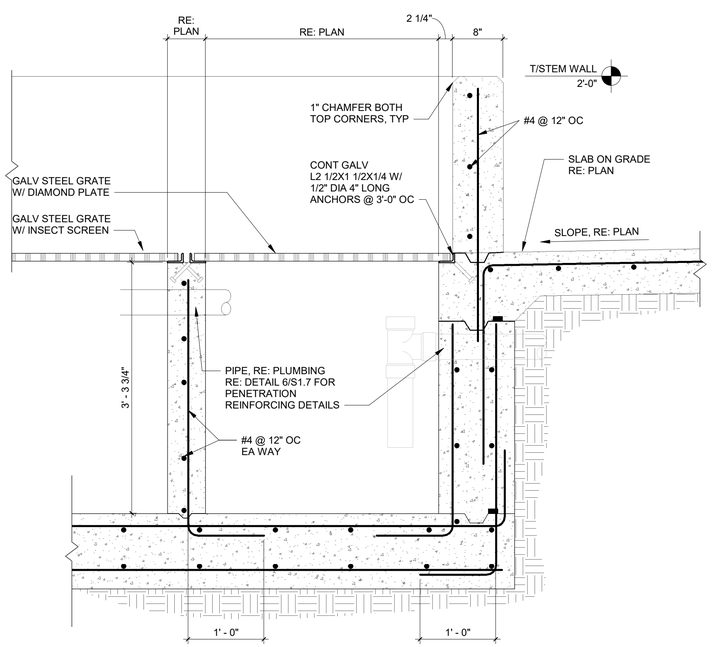

2 PIT SECTION
1" = 1'-0"

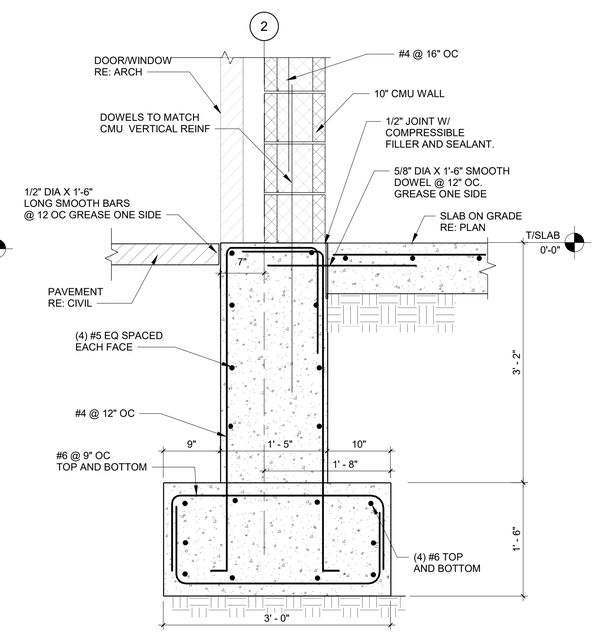

4 SECTION AT PERIMETER - MAINTENANCE AND WASH BUILDINGS AT DOOR/WINDOW
1" = 1'-0"

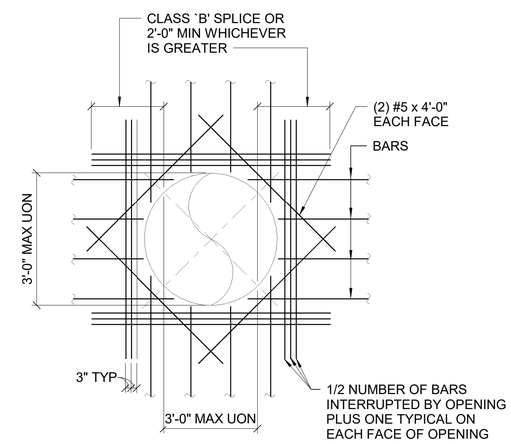

6 TYPICAL ADDITIONAL BAR PLACING DETAIL FOR WALL OR SLAB OPENINGS
1" = 1'-0"

FOOTING SCHEDULE

MARKS	LENGTH	WIDTH	THICKNESS	BOTTOM REINFORCEMENT		TOP REINFORCEMENT		REMARKS
				LONG DIRECTION	SHORT DIRECTION	LONG DIRECTION	SHORT DIRECTION	
F1	6'-0"	6'-0"	4'-0"	(8) #8	(8) #8	(8) #8	(8) #8	
F2	5'-6"	5'-6"	4'-0"	(8) #8	(8) #8	(8) #8	(8) #8	
F3	5'-0"	5'-0"	4'-0"	(7) #8	(7) #8	(7) #8	(7) #8	
F4	7'-6"	7'-6"	4'-0"	(10) #8	(10) #8	(10) #8	(10) #8	
F5	6'-0"	6'-0"	2'-0"	(6) #7	(6) #7	(6) #7	(6) #7	
F6	8'-0"	8'-0"	2'-0"	(9) #7	(9) #7	(9) #7	(9) #7	

5 FOOTING SCHEDULE
1" = 1'-0"

Texas Department of Transportation

COPYRIGHT © 2021

Jacobs
1999 Bryan Street, Suite 1200
Dallas, Tx 75201
JACOBS ENGINEERING GROUP, INC
TEXAS REGISTRATION #2966

STATE OF TEXAS
GABRIEL A. SERNA
99793
04/21/2021

DALLAS DISTRICT (18)
COLLIN COUNTY
McKinney Area Engineering and Maintenance Facility
2205 TX-5, McKinney, TX 75069
PROJECT NO. 18-4704200012

ISSUED: 2021.04.21
DRAWN BY: GP
REVISIONS:

FOUNDATION SECTIONS AND DETAILS

S1.7

THIS DRAWING CREATED FOR PRODUCTION ON 22"x34" SHEET SIZE. DO NOT SCALE PRINTS.

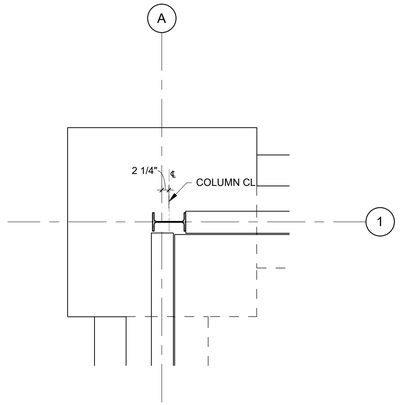

1 COLUMN LOCATION GRID A1
1/2" = 1'-0"

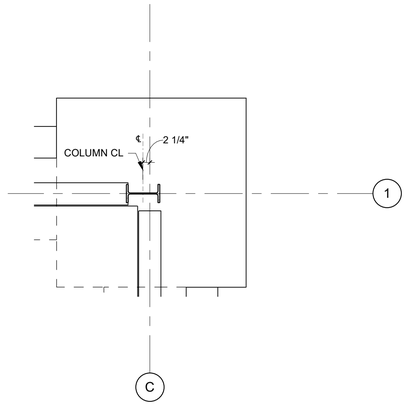

2 COLUMN LOCATION GRID C1
1/2" = 1'-0"

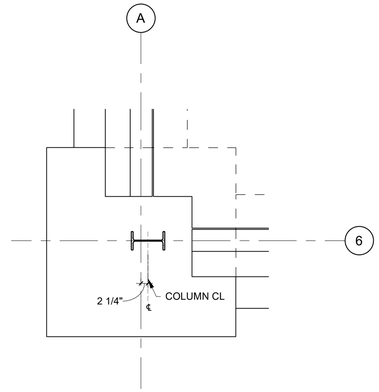

3 COLUMN LOCATION GRID A6
1/2" = 1'-0"

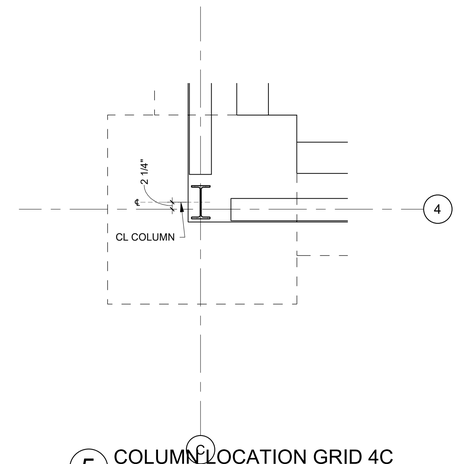

5 COLUMN LOCATION GRID 4C
1/2" = 1'-0"

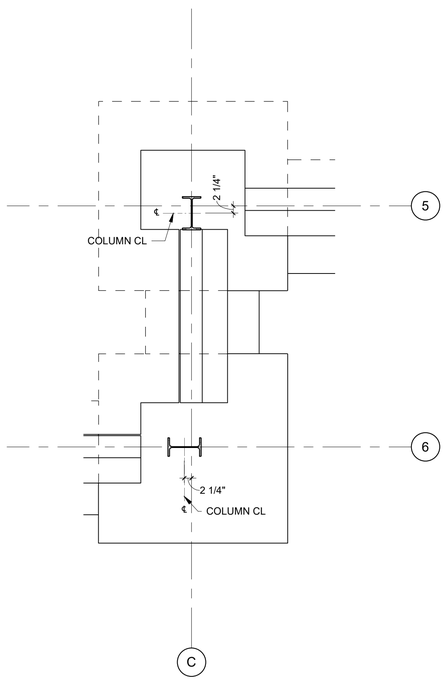

4 COLUMN LOCATION GRID A1
1/2" = 1'-0"

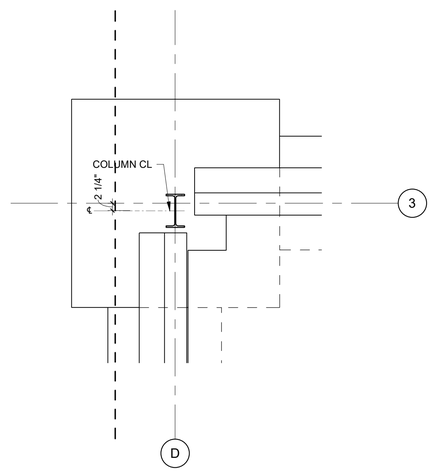

6 COLUMN LOCATION GRID D3
1/2" = 1'-0"

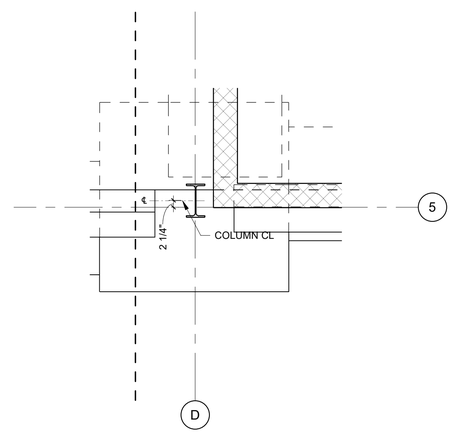

7 COLUMN LOCATION GRID 5D
1/2" = 1'-0"

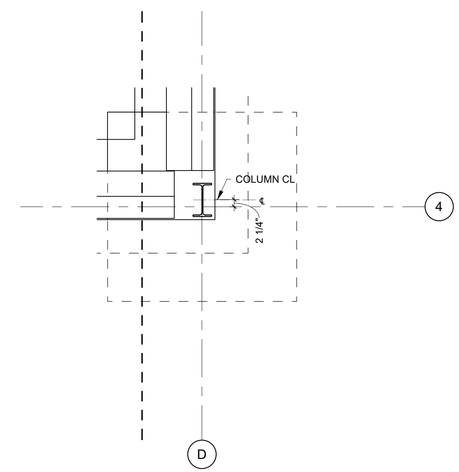

8 COLUMN LOCATION GRID 4D
1/2" = 1'-0"

Texas Department of Transportation

COPYRIGHT © 2021

Jacobs
1999 Bryan Street, Suite 1200
Dallas, Tx 75201

JACOBS ENGINEERING GROUP, INC
TEXAS REGISTRATION #2966

GABRIEL A. SERNA
99793
04/21/2021

DALLAS DISTRICT (18)
COLLIN COUNTY
McKinney Area Engineering and Maintenance Facility
2205 TX-5, McKinney, TX 75069
PROJECT NO. 18-470420012

ISSUED: 2021.04.21
DRAWN BY: GP
REVISIONS:

FOUNDATION SECTIONS AND DETAILS

S1.8

THIS DRAWING CREATED FOR PRODUCTION ON 22"x34" SHEET SIZE. DO NOT SCALE PRINTS.

KEYPLAN

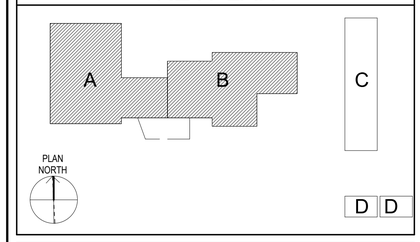

SCALES

3/32" = 1'-0"

16' 8' 0' 8' 16' 24'

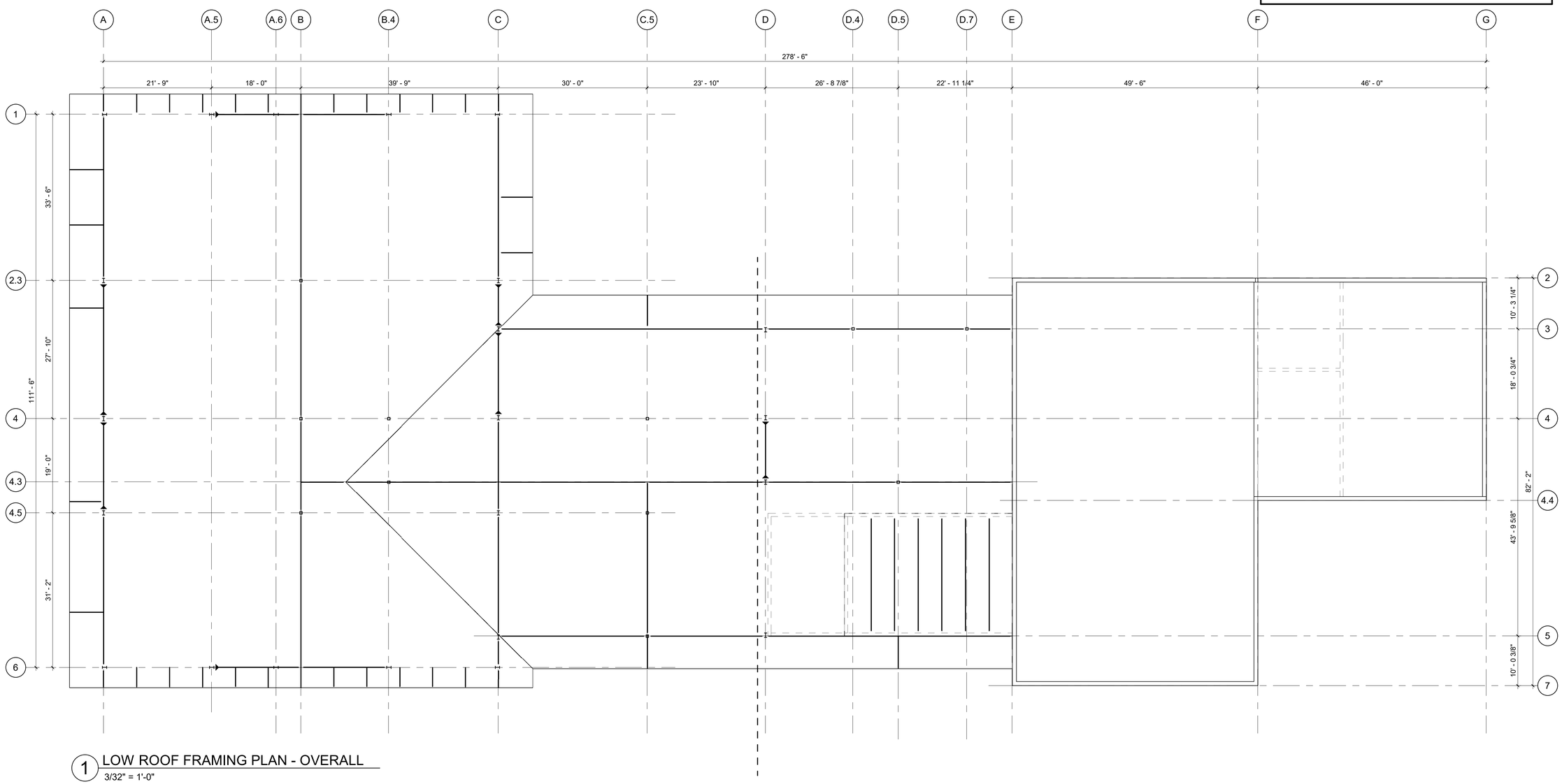

1 LOW ROOF FRAMING PLAN - OVERALL

3/32" = 1'-0"

Texas Department of Transportation

COPYRIGHT © 2021

Jacobs

1999 Bryan Street, Suite 1200
Dallas, Tx 75201

JACOBS ENGINEERING GROUP, INC
TEXAS REGISTRATION #2966

GABRIEL A. SERNA
99793
04/21/2021

DALLAS DISTRICT (18)
COLLIN COUNTY

McKinney Area Engineering and Maintenance Facility

2205 TX-5, McKinney, TX 75069

PROJECT NO. 18-4704200012

ISSUED: 2021.04.21

DRAWN BY: GP

REVISIONS:

LOW ROOF FRAMING PLAN OVERALL

S2.1

THIS DRAWING CREATED FOR PRODUCTION ON 22"x34" SHEET SIZE. DO NOT SCALE PRINTS.

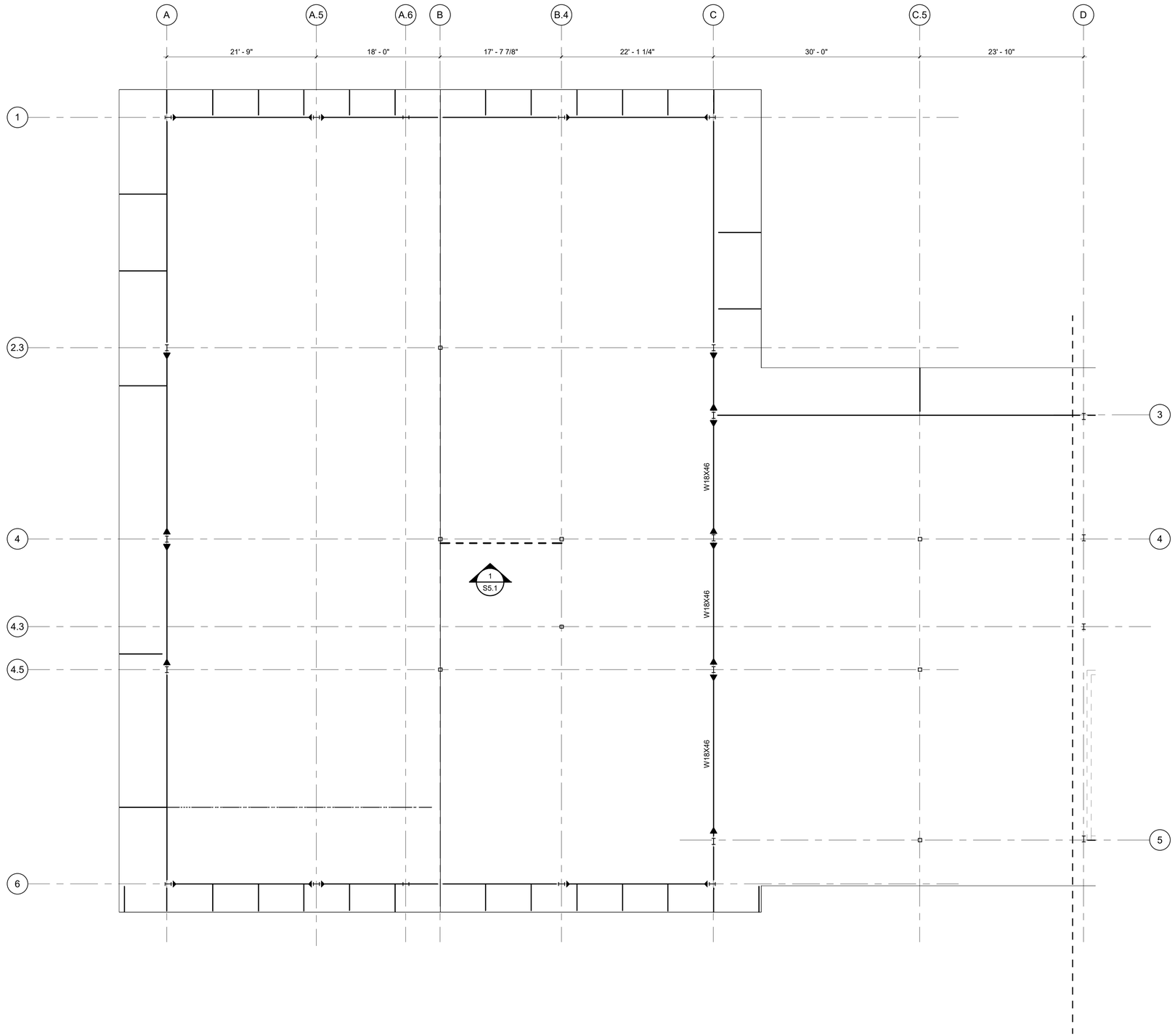

1 LOW ROOF FRAMING PLAN - AREA A
1/8" = 1'-0"

KEYPLAN

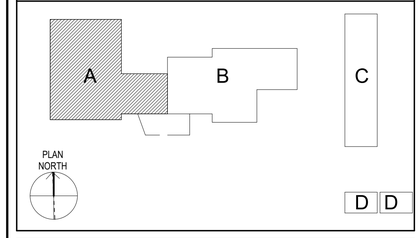

SCALES

1/8" = 1'-0"
8' 6' 4' 2' 0' 4' 8' 16'

Texas Department of Transportation

COPYRIGHT © 2021

Jacobs
1999 Bryan Street, Suite 1200
Dallas, Tx 75201

JACOBS ENGINEERING GROUP, INC
TEXAS REGISTRATION #2966

GABRIEL A. SERNA
99793
04/21/2021

DALLAS DISTRICT (18)
COLLIN COUNTY
McKinney Area Engineering and Maintenance Facility
2205 TX-5, McKinney, TX 75069
PROJECT NO. 18-4704200012

ISSUED: 2021.04.21
DRAWN BY: GP
REVISIONS:

LOW ROOF FRAMING PLAN AREA A

S2.2

THIS DRAWING CREATED FOR PRODUCTION ON 22"x34" SHEET SIZE. DO NOT SCALE PRINTS.

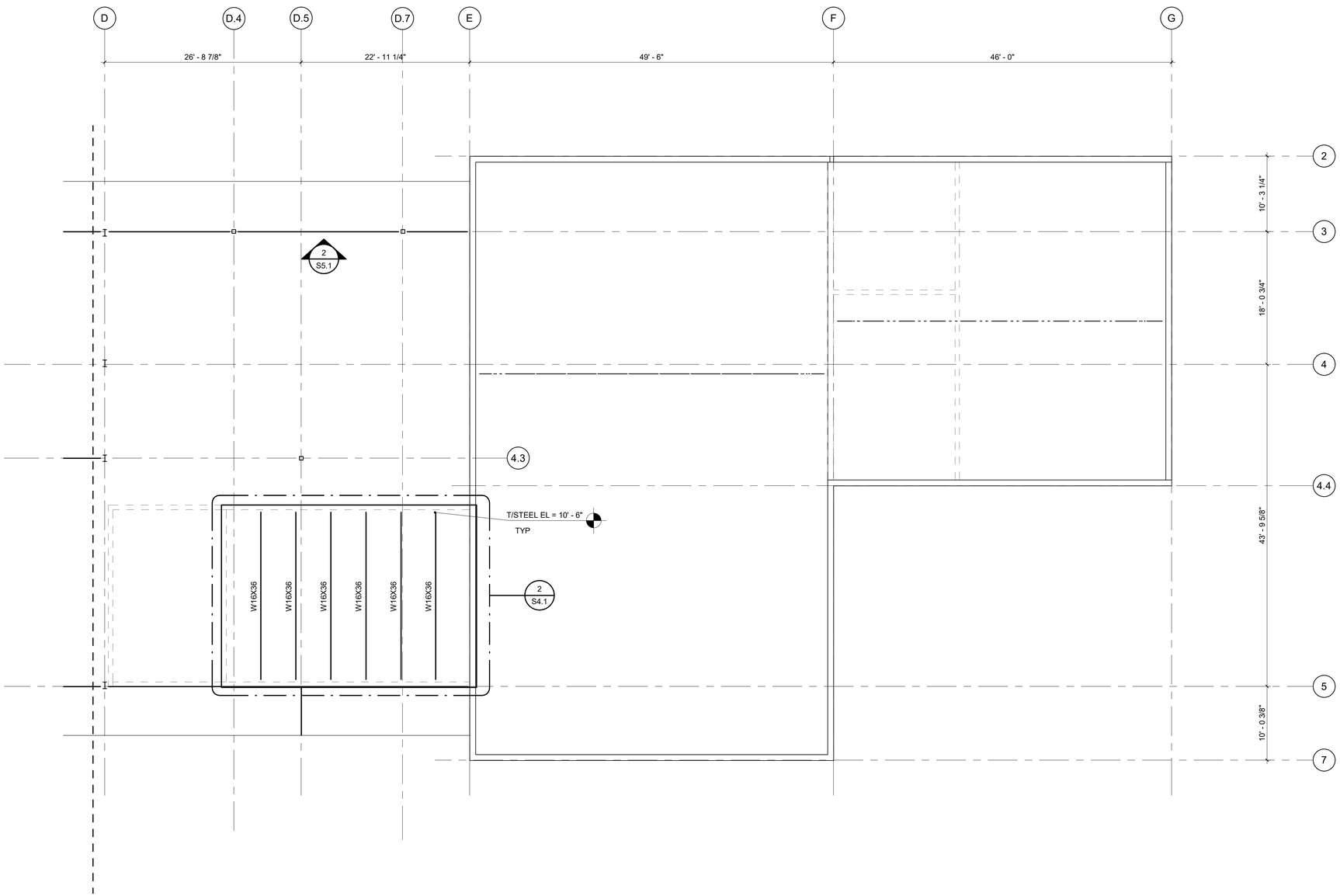

1 LOW ROOF FRAMING PLAN - AREA B
1/8" = 1'-0"

KEYPLAN

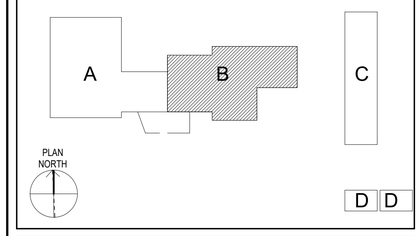

SCALES

1/8" = 1'-0"

8' 6' 4' 2' 0' 4' 8' 16'

KEY NOTES

Texas Department of Transportation

COPYRIGHT © 2021

Jacobs
1999 Bryan Street, Suite 1200
Dallas, Tx 75201

JACOBS ENGINEERING GROUP, INC
TEXAS REGISTRATION #2966

GABRIEL A. SERNA
99793
04/21/2021

DALLAS DISTRICT (18)
COLLIN COUNTY
McKinney Area Engineering and Maintenance Facility
2205 TX-5, McKinney, TX 75069
PROJECT NO. 18-470420012

ISSUED: 2021.04.21
DRAWN BY: GP
REVISIONS:

LOW ROOF FRAMING PLAN AREA B

S2.3

THIS DRAWING CREATED FOR PRODUCTION ON 22"x34" SHEET SIZE. DO NOT SCALE PRINTS.

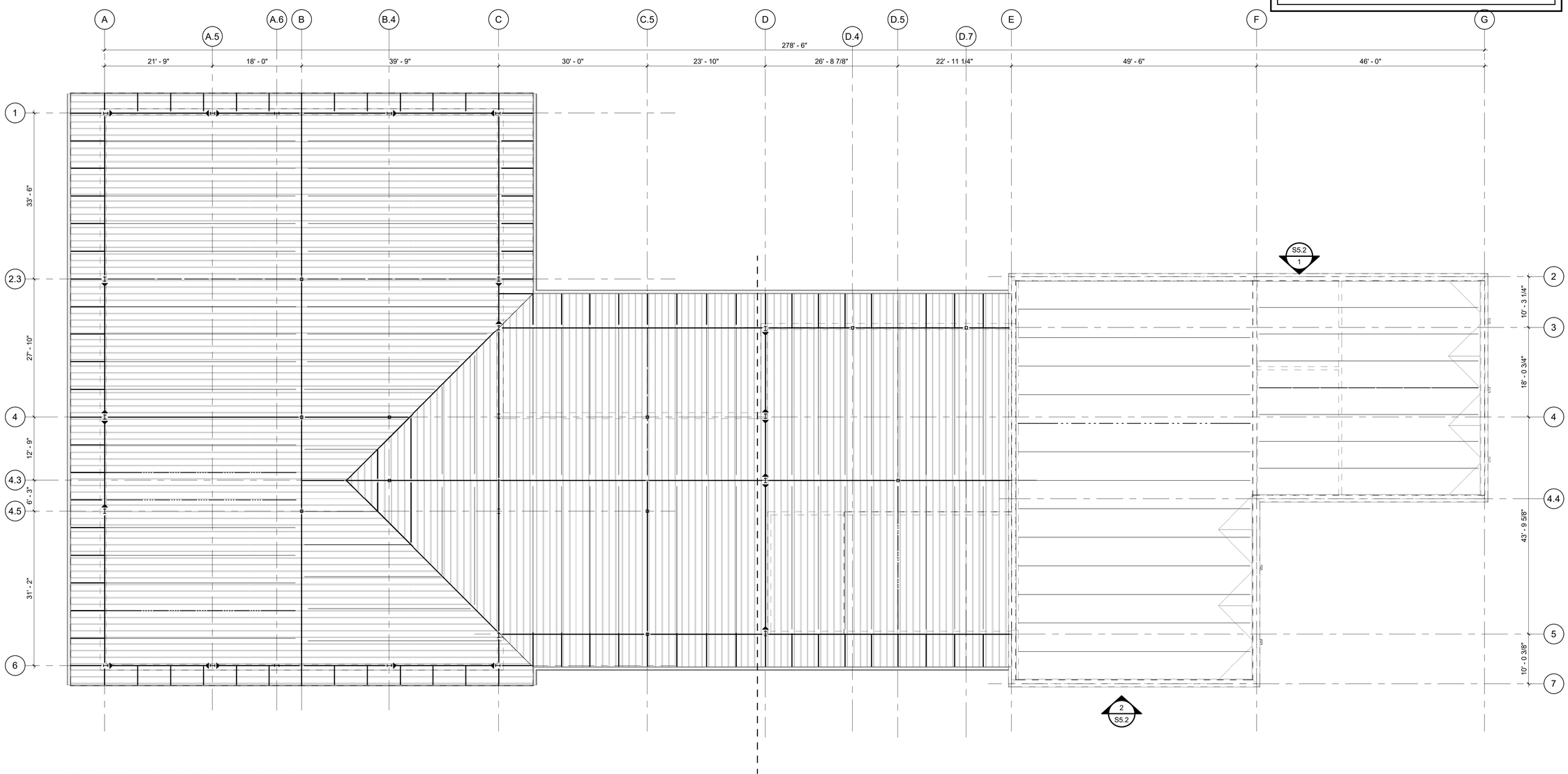

1 ROOF FRAMING PLAN - OVERALL
3/32" = 1'-0"

KEYPLAN

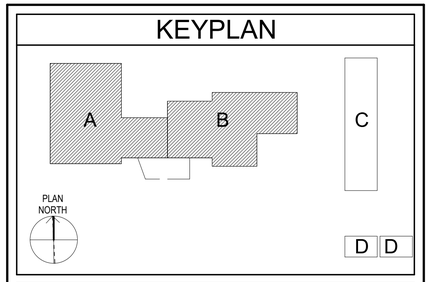

SCALES

Texas Department of Transportation
COPYRIGHT © 2021

Jacobs
1999 Bryan Street, Suite 1200
Dallas, Tx 75201
JACOBS ENGINEERING GROUP, INC
TEXAS REGISTRATION #2966
GABRIEL A. SERNA
99793
04/21/2021

DALLAS DISTRICT (18)
COLLIN COUNTY
McKinney Area Engineering and Maintenance Facility
2205 TX-5, McKinney, TX 75069
PROJECT NO. 18-470420012

ISSUED: 2021.04.21
DRAWN BY: GP
REVISIONS:

ROOF FRAMING PLAN OVERALL

S2.4

THIS DRAWING CREATED FOR PRODUCTION ON 22"x34" SHEET SIZE. DO NOT SCALE PRINTS.

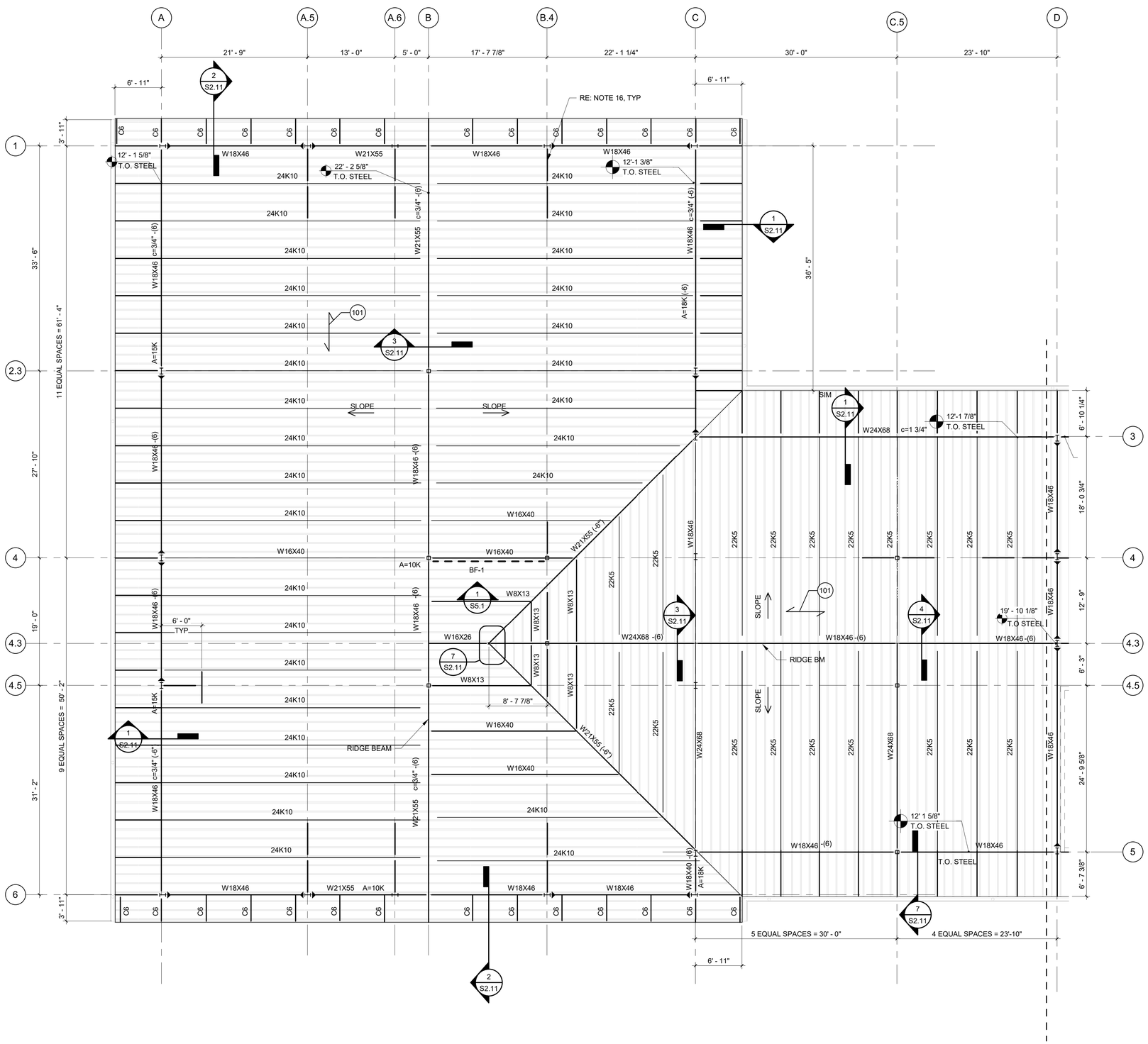

1 ROOF FRAMING PLAN - AREA A

1/8" = 1'-0"

KEYPLAN

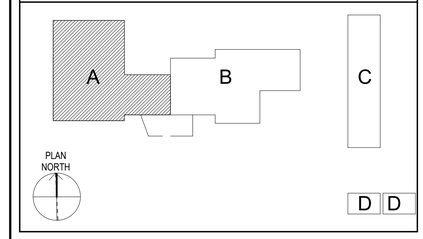

SCALES

1/8" = 1'-0"

8' 6' 4' 2' 0' 4' 8' 16'

KEY NOTES

101	1 1/2" DEEP 20 GA WIDE RIB METAL ROOF DECK.

PLAN NOTES

1. TOP OF STEEL ELEVATION=BOTTOM OF METAL ROOF DECK. WHERE NO METAL DECK IS PRESENT T/STEEL ELEVATION INDICATES TOP OF BEAM
2. (-6") INDICATES TOP OF BEAM ELEVATION RELATIVE TO TOP OF STEEL ELEVATION NOTED ON PLAN.
3. TOP OF STEEL ELEVATIONS SHOWN ARE MEASURED RELATIVE TO TOP OF SLAB BELOW.
4. INDICATES MOMENTS CONNECTION SEE SHEET 2.10 FOR TYPICAL MOMENT CONNECTION DETAILS.
5. INDICATES BRACED FRAMES SEE SHEET 6.2 FOR BRACED FRAME ELEVATIONS
6. INDICATES DIRECTION OF DECK SPAN
7. RE: S0.1 THROUGH S0.3 FOR STRUCTURAL GENERAL NOTES
8. RE: S2.10 FOR TYPICAL STEEL SECTIONS AND DETAILS
9. RE: S4.10 FOR TYPICAL MASONRY SECTIONS AND DETAILS
10. COORDINATE ALL PENETRATIONS WITH ARCH AND MEP DRAWINGS
11. ALL INFILL JOISTS SHALL BE EQUALLY SPACED BETWEEN COLUMN CENTERLINES UNLESS OTHERWISE NOTED.
12. ALL JOIST OVERHANGS SHALL HAVE R12 JOIST EXTENSIONS.
13. PROVIDE BEAM BOTTOM FLANGE BRACES AT EVERY OTHER JOIST. SEE S2.10 FOR TYPICAL DETAIL.
14. PROVIDE DIAPHRAGM CONNECTION TO STEEL BEAM AT ALL BEAMS INDICATED ACTING AS PART OF A MOMENT FRAME OR BRACED FRAME. PLUS ONE BEAM ON EITHER SIDE OF MOMENT FRAME/BRACED FRAME SEE S2.10 FOR TYPICAL DETAIL.
15. ALL CONNECTIONS FOR BEAMS ALONG LINES 1, 3, 5, 6, A AND C SHALL BE DESIGNED TO TRANSFER A MINIMUM (UNFACTORED) AXIAL FORCE OF 10 KIPS, UNLESS OTHERWISE NOTED.
16. PROVIDE A WT7X11 DRAG STRUT AT ALL COLUMNS NOT STABILIZED BY A ROOF JOIST OR BEAM. ATTACH STEM OF WT TO COLUMNS SIM TO 5/S2.10 WITH (2) 3/4" DIAMETER SLIP-CRITICAL BOLTS. ATTACH TO JOISTS BY COPING WT STEMS AND RUNNING WT TOP FLANGE CONTINUOUS OVER CHORDS AND WELDING TO TOP OF JOIST CHORDS. WHEN WT IS SHOWN TO EXTEND CONTINUOUSLY THROUGH A JOIST, PROVIDE A L2X2X1/4 CONTINUITY ANGLE WELDED TO EACH WT STEM. WELD METAL DECK TO WT STRUTS PER METAL DECK NOTES.

Texas Department of Transportation
COPYRIGHT © 2021

Jacobs
1999 Bryan Street, Suite 1200
Dallas, Tx 75201
JACOBS ENGINEERING GROUP, INC
TEXAS REGISTRATION #2966
GABRIEL A. SERNA
99793
04/21/2021

DALLAS DISTRICT (18)
COLLIN COUNTY
McKinney Area Engineering and Maintenance Facility
2205 TX-5, McKinney, TX 75069
PROJECT NO. 18-470420001 2

ISSUED: 2021.04.21
DRAWN BY: GP
REVISIONS:

ROOF FRAMING PLAN AREA A

S2.5

THIS DRAWING CREATED FOR PRODUCTION ON 22"x34" SHEET SIZE. DO NOT SCALE PRINTS.

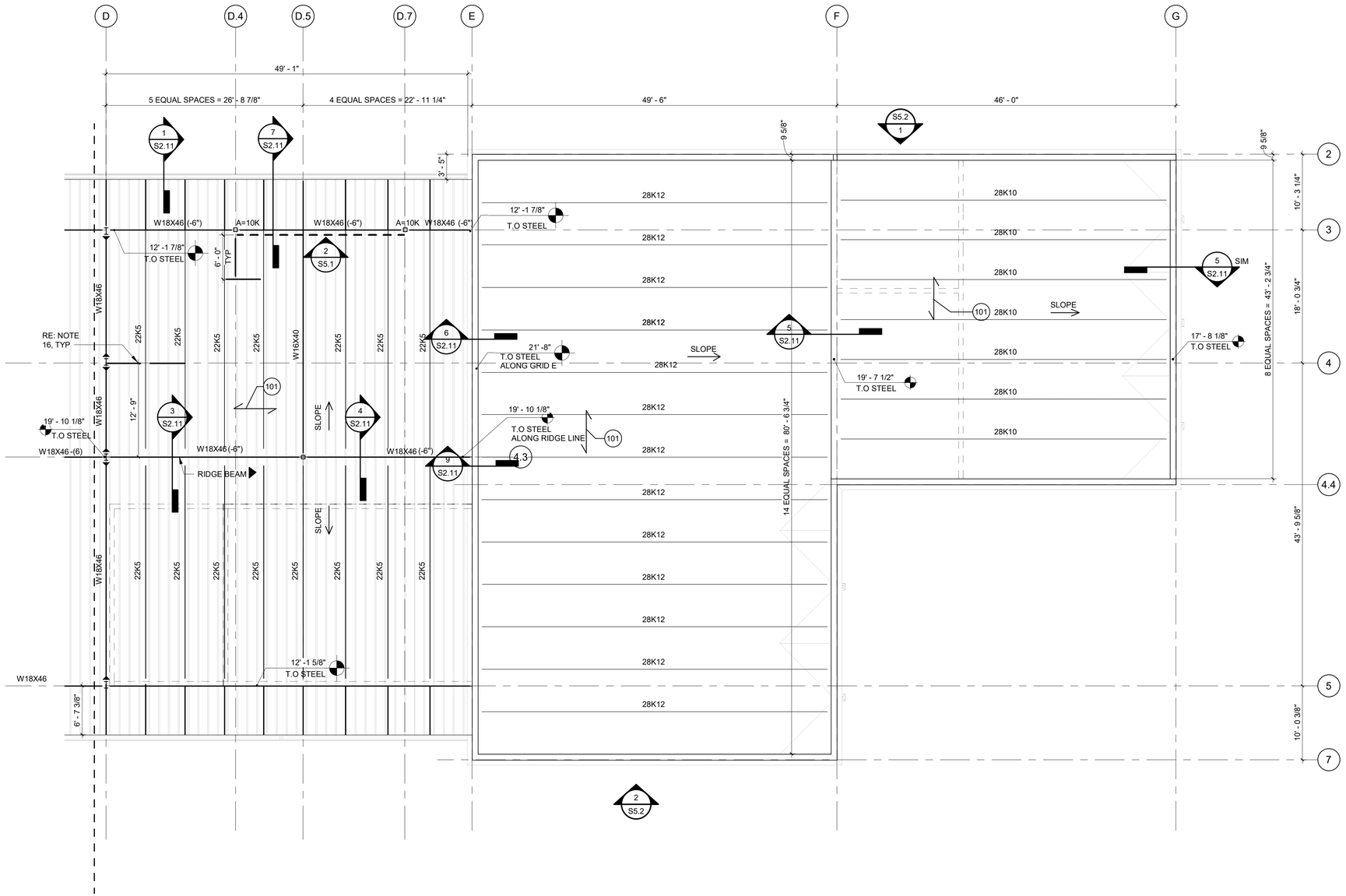

1 ROOF FRAMING PLAN - AREA B

1/8" = 1'-0"

KEYPLAN

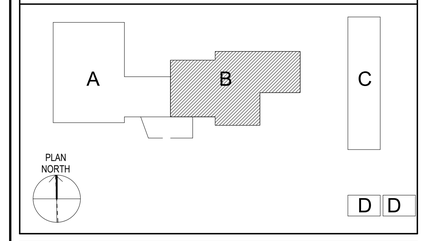

SCALES

1/8" = 1'-0"

8' 6' 4' 2' 0' 4' 8' 16'

KEY NOTES

101	1 1/2" DEEP 20 GA WIDE RIB METAL ROOF DECK.

PLAN NOTES

1.	TOP OF STEEL ELEVATION=BOTTOM OF METAL ROOF DECK. WHERE NO METAL DECK IS PRESENT T/STEEL ELEVATION INDICATES TOP OF BEAM
2.	(-6") INDICATES TOP OF BEAM ELEVATION RELATIVE TO TOP OF STEEL ELEVATION NOTED ON PLAN.
3.	TOP OF STEEL ELEVATIONS SHOWN ARE MEASURED RELATIVE TO TOP OF SLAB BELOW.
4.	INDICATES MOMENTS CONNECTION SEE SHEET 2.10 FOR TYPICAL MOMENT CONNECTION DETAILS.
5.	INDICATES BRACED FRAMES SEE SHEET 6.2 FOR BRACED FRAME ELEVATIONS
6.	INDICATES DIRECTION OF DECK SPAN
7.	RE: S0.1 THROUGH S0.3 FOR STRUCTURAL GENERAL NOTES
8.	RE: S2.10 FOR TYPICAL STEEL SECTIONS AND DETAILS
9.	RE: S4.10 FOR TYPICAL MASONRY SECTIONS AND DETAILS
10.	COORDINATE ALL PENETRATIONS WITH ARCH AND MEP DRAWINGS
11.	ALL INFILL JOISTS SHALL BE EQUALLY SPACED BETWEEN COLUMN CENTERLINES UNLESS OTHERWISE NOTED.
12.	ALL JOIST OVERHANGS SHALL HAVE R12 JOIST EXTENSIONS.
13.	PROVIDE BEAM BOTTOM FLANGE BRACES AT EVERY OTHER JOIST. SEE S2.10 FOR TYPICAL DETAIL.
14.	PROVIDE DIAPHRAGM CONNECTION TO STEEL BEAM AT ALL BEAMS INDICATED ACTING AS PART OF A MOMENT FRAME OR BRACED FRAME. SEE S2.10 FOR TYPICAL DETAIL.
15.	ALL CONNECTIONS FOR BEAMS ALONG LINES 1, 3, 5, 6, A AND C SHALL BE DESIGNED TO TRANSFER A MINIMUM (UNFACTORED) AXIAL FORCE 0F 10 KIPS, UNLESS OTHERWISE NOTED.
16.	PROVIDE A WT7X11 DRAG STRUT AT ALL COLUMNS NOT STABILIZED BY A ROOF JOIST OR BEAM. ATTACH STEM OF WT TO COLUMNS SIM TO 5/S2.10 WITH (2) 3/4" DIAMETER SLIP-CRITICAL BOLTS. ATTACH TO JOISTS BY COPING WT STEMS AND RUNNING WT TOP FLANGE CONTINUOUS OVER CHORDS AND WELDING TO TOP OF JOIST CHORDS. WHEN WT IS SHOWN TO EXTEND CONTINUOUSLY THROUGH A JOIST, PROVIDE A L2X2X1/4 CONTINUITY ANGLE WELDED TO EACH WT STEM. WELD METAL DECK TO WT STRUTS PER METAL DECK NOTES.

Texas Department of Transportation
COPYRIGHT © 2021

Jacobs
1999 Bryan Street, Suite 1200
Dallas, Tx 75201
JACOBS ENGINEERING GROUP, INC
TEXAS REGISTRATION #2966
GABRIEL A. SERNA
99793
04/21/2021

DALLAS DISTRICT (18)
COLLIN COUNTY
McKinney Area Engineering and Maintenance Facility
2205 TX-5, McKinney, TX 75069
PROJECT NO. 18-470420012

ISSUED: 2021.04.21
DRAWN BY: GP
REVISIONS:

ROOF FRAMING PLAN AREA B

S2.6

THIS DRAWING CREATED FOR PRODUCTION ON 22"x34" SHEET SIZE. DO NOT SCALE PRINTS.

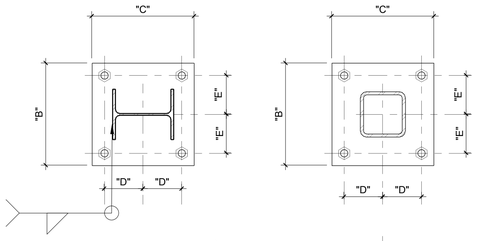

BASE PLATE/ANCHOR ROD SCHEDULE

BASE PLATE TYPE	BASE PLATE SIZE						ANCHOR RODS	
	A	B	C	D	E	F	G	H
BP1	1 1/2"	12 1/2"	17"	6 1/2"	4 1/4"	-	1 1/4"	18"
BP2	1 1/4"	12"	16 1/2"	6 1/4"	4"	-	1"	18"
BP3	3/4"	11"	11"	4"	4"	-	1"	15"
BP4	1"	12"	20"	5"	4"	6"	1"	18"

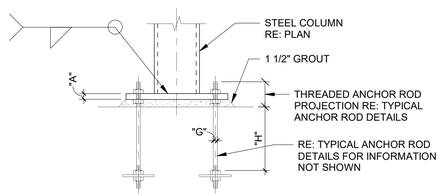

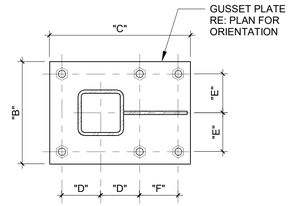

1 BASE PLATE/ANCHOR ROD SCHEDULE
1" = 1'-0"

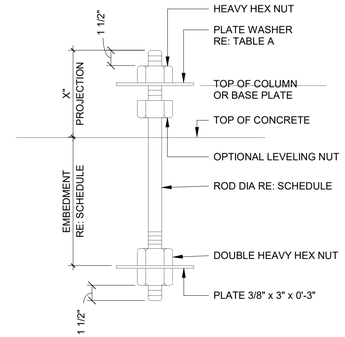

TABLE A

ANCHOR ROD DIA (INCHES)	HOLE DIA (INCHES)	MINIMUM WASHER SIZE
3/4	1 5/16	PL 3/8" x 1 7/8" x 1 7/8"
7/8	1 9/16	PL 3/8" x 2 1/4" x 2 1/4"
1	1 13/16	PL 1/2" x 2 5/8" x 2 5/8"
1 1/4	2 1/16	PL 5/8" x 2 7/8" x 2 7/8"
1 1/2	2 5/16	PL 3/4" x 3 1/8" x 3 1/8"
1 3/4	2 3/4	PL 7/8" x 3 3/4" x 3 3/4"
2	3 1/4	PL 1" x 4 1/2" x 4 1/2"
2 1/2	3 3/4	PL 1 1/2" x 5" x 5"

2 TYPICAL ANCHOR ROD DETAIL
NTS

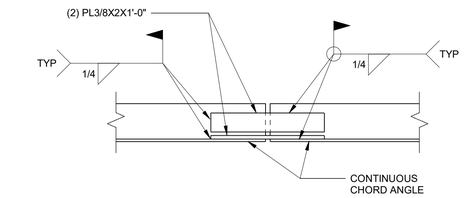

3 SPLICE DETAIL
1 1/2" = 1'-0"

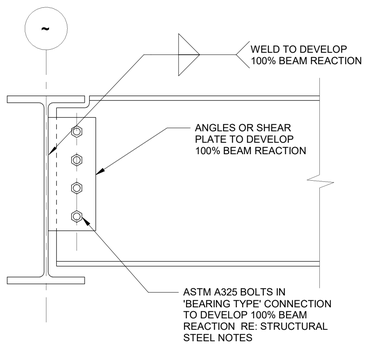

4 TYPICAL BEAM TO BEAM SHEAR CONNECTION
1 1/2" = 1'-0"

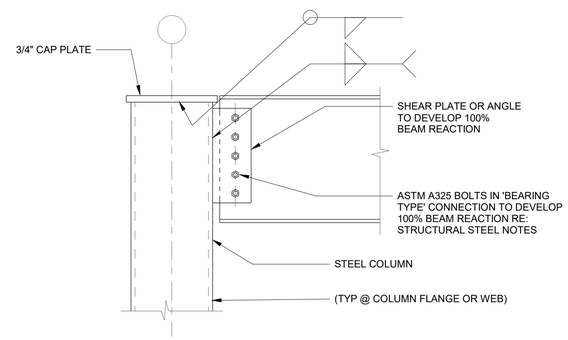

5 TYPICAL BEAM TO COLUMN SHEAR CONNECTION
1" = 1'-0"

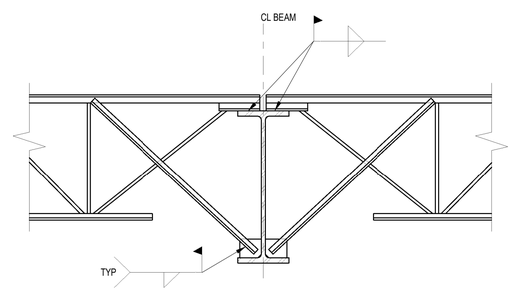

6 BEAM BOTTOM FLANGE BRACE
1" = 1'-0"

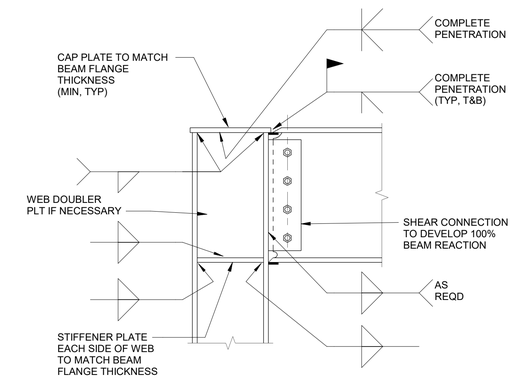

NOTE:
1. MOMENT CONNECTION SHALL DEVELOP FULL FLEXURAL CAPACITY OF MEMBER.

7 TYPICAL BEAM TO TOP OF COLUMN MOMENT CONNECTION
1 1/2" = 1'-0"

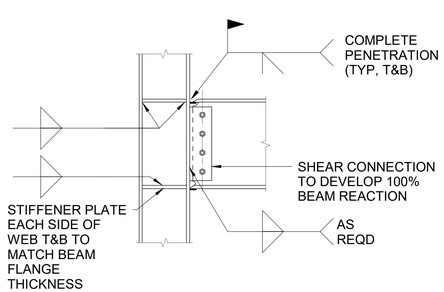

NOTE:
1. MOMENT CONNECTION SHALL DEVELOP FULL FLEXURAL CAPACITY OF MEMBER.

9 TYPICAL BEAM TO COLUMN MOMENT CONNECTION
1" = 1'-0"

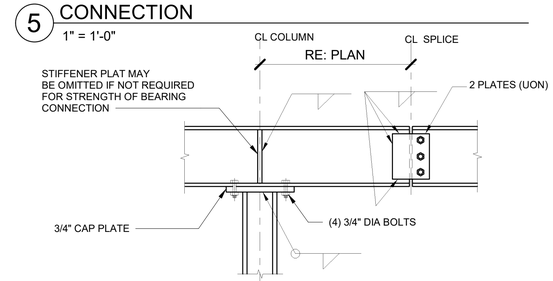

8 TYPICAL BEAM TO COLUMN CONNECTION FOR CANTILEVER BEAMS
1" = 1'-0"

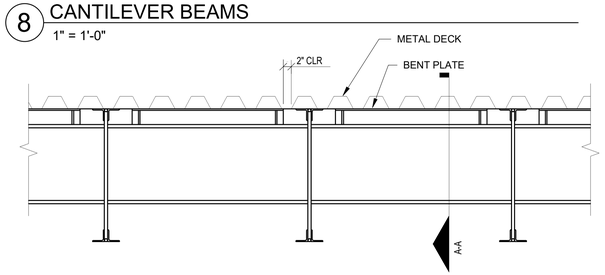

ELEVATION

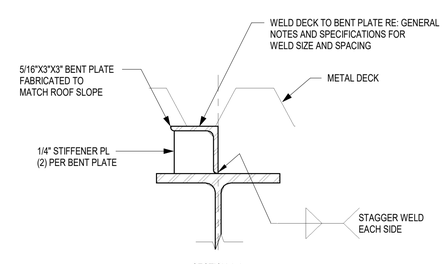

SECTION A-A

NOTE:
1. REFER TO PLAN ON DETAILS FOR BEAMS REQUIRING BENT PLATE.

10 DIAPHRAGM CONNECTION TO STEEL BEAM
1" = 1'-0"

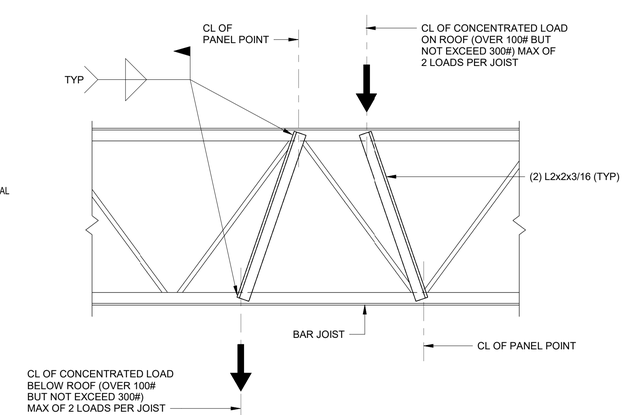

NOTE:
1. ONLY 2 LOADS TOTAL MAY BE APPLIED TO ONE JOIST.

11 TYPICAL JOIST REINFORCEMENT
1" = 1'-0"

Texas Department of Transportation

COPYRIGHT © 2021

Jacobs
1999 Bryan Street, Suite 1200
Dallas, Tx 75201
JACOBS ENGINEERING
GROUP, INC
TEXAS REGISTRATION #2966

STATE OF TEXAS
GABRIEL A. SERNA
99793
04/21/2021

DALLAS DISTRICT (18)
COLLIN COUNTY
McKinney Area Engineering and Maintenance Facility
2205 TX-5, McKinney, TX 75069
PROJECT NO. 18-470420001 2

ISSUED: 2021.04.21
DRAWN BY: Author
REVISIONS:

TYPICAL
STEEL
SECTIONS
AND DETAILS

S2.10

THIS DRAWING CREATED
FOR PRODUCTION ON
22"x34" SHEET SIZE.
DO NOT SCALE PRINTS.

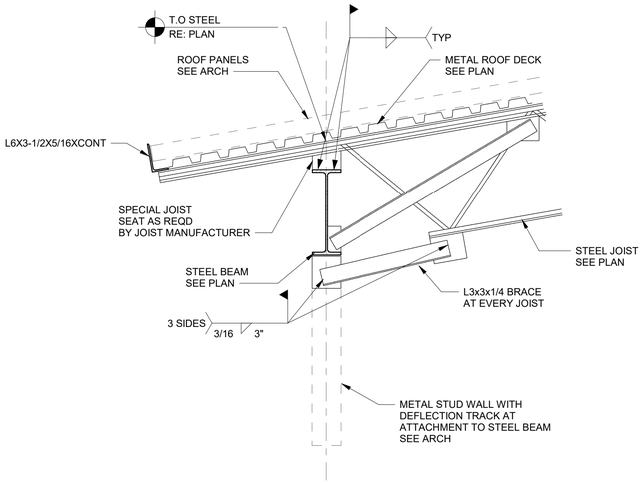

1 ROOF SECTION
3/4" = 1'-0"

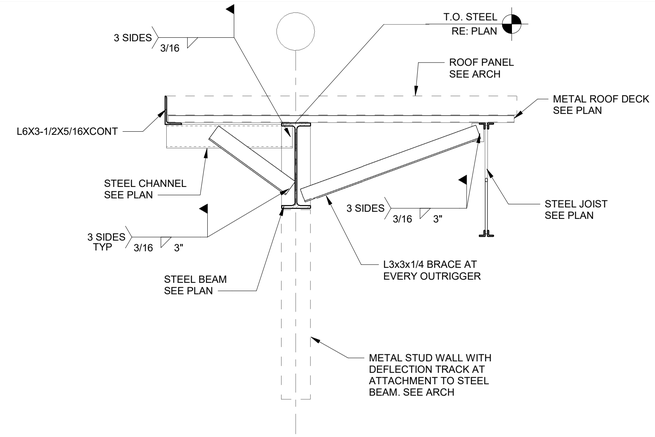

2 ROOF SECTION
3/4" = 1'-0"

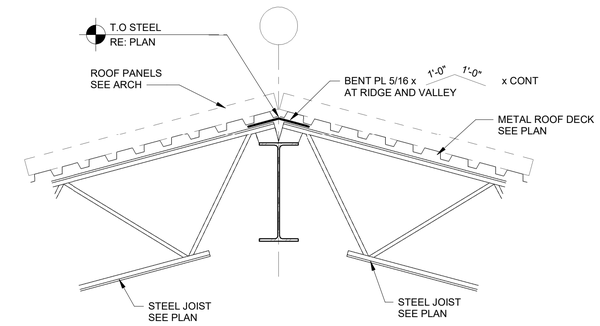

3 ROOF SECTION
3/4" = 1'-0"

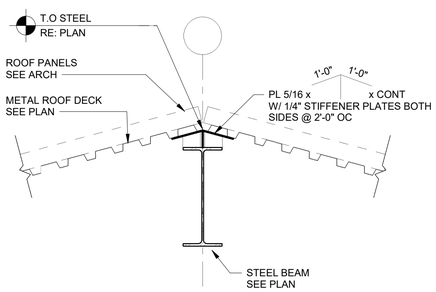

4 ROOF SECTION
3/4" = 1'-0"

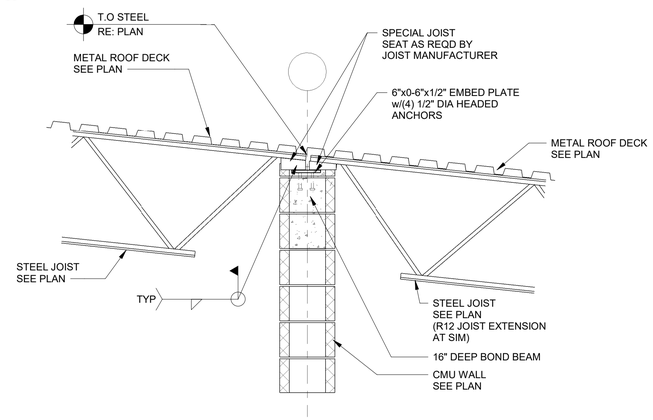

5 ROOF SECTION
3/4" = 1'-0"

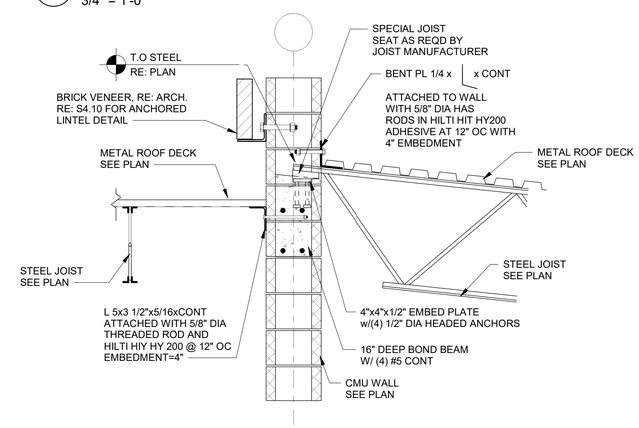

6 ROOF SECTION
3/4" = 1'-0"

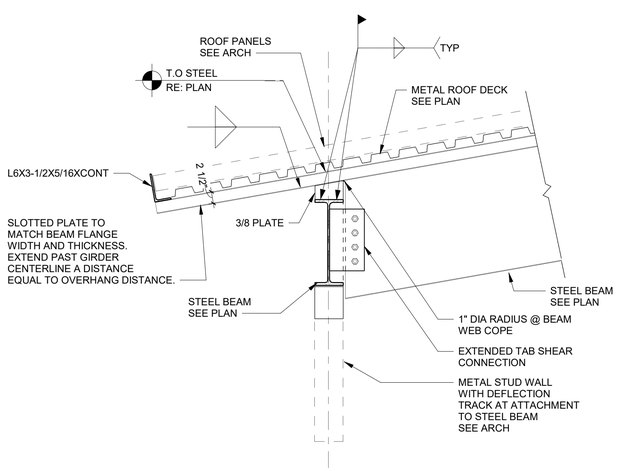

7 ROOF SECTION
3/4" = 1'-0"

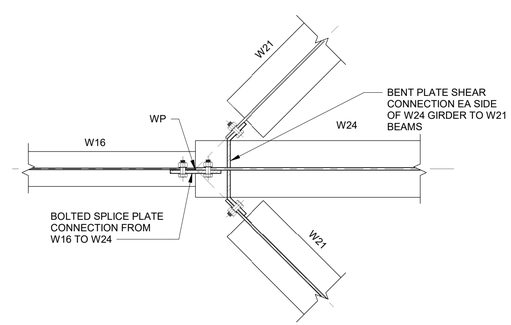

8 BEAMS AT INTERSECTION
1" = 1'-0"

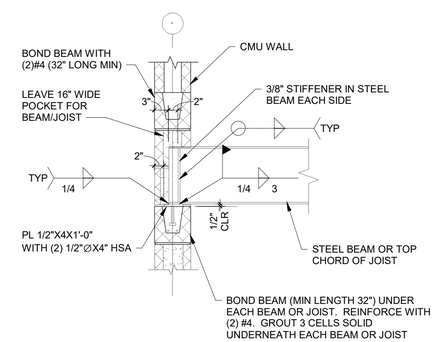

9 STEEL BEAM CONNECTION TO CMU WALL
3/4" = 1'-0"

Texas Department of Transportation

COPYRIGHT © 2021

Jacobs
1999 Bryan Street, Suite 1200
Dallas, Tx 75201

JACOBS ENGINEERING
GROUP, INC
TEXAS REGISTRATION #2966

STATE OF TEXAS
GABRIEL A. SERNA
99793
04/21/2021

DALLAS DISTRICT (18)
COLLIN COUNTY
McKinney Area Engineering and Maintenance Facility
2205 TX-5, McKinney, TX 75069
PROJECT NO. 18-4704200012

ISSUED: 2021.04.21
DRAWN BY: Author
REVISIONS:

STEEL
SECTIONS
AND DETAILS

S2.11

THIS DRAWING CREATED
FOR PRODUCTION ON
22"x34" SHEET SIZE
DO NOT SCALE PRINTS.

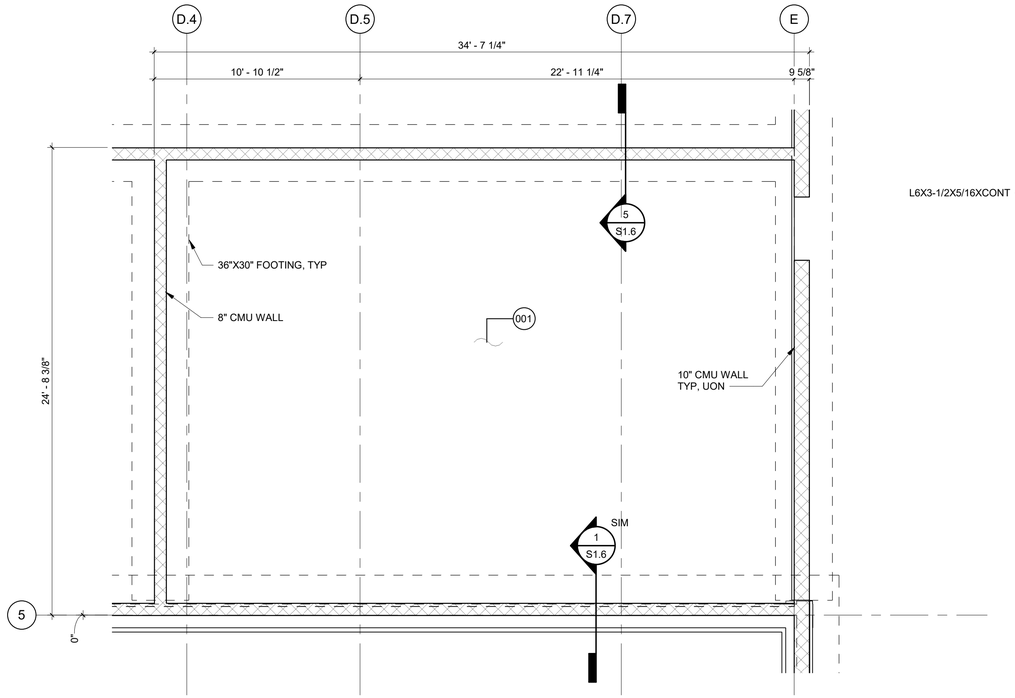

1 SAFE ROOM - FOUNDATION PLAN
1/4" = 1'-0"

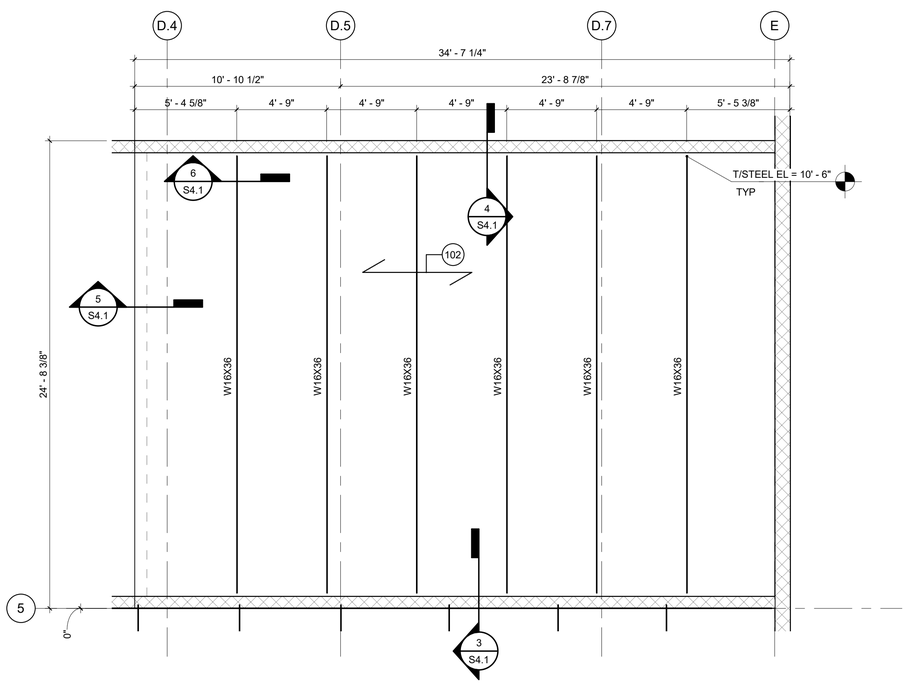

2 SAFE ROOM - ROOF FRAMING PLAN
1/4" = 1'-0"

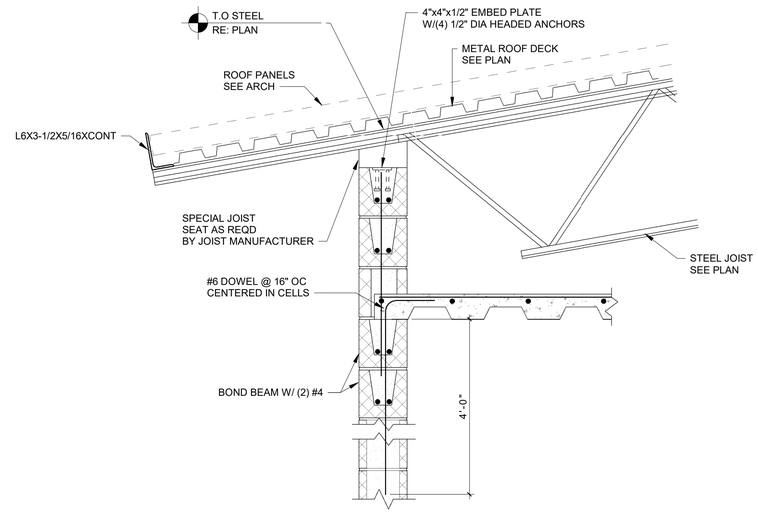

3 DECK EDGE DETAIL
1" = 1'-0"

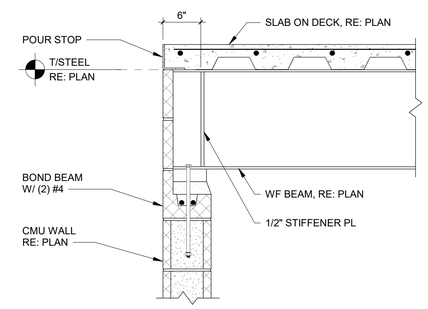

4 BEAM BEARING DETAIL
1" = 1'-0"

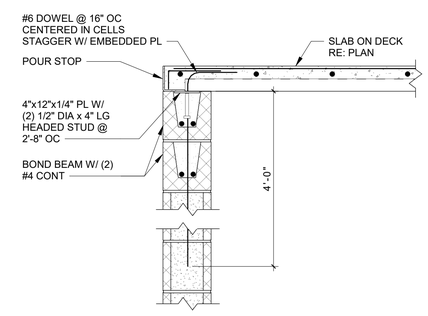

5 DECK EDGE DETAIL
1" = 1'-0"

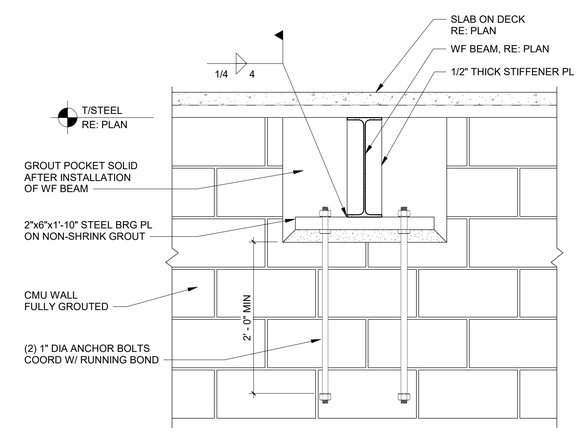

6 BEAM BEARING ELEVATION
1" = 1'-0"

KEYPLAN

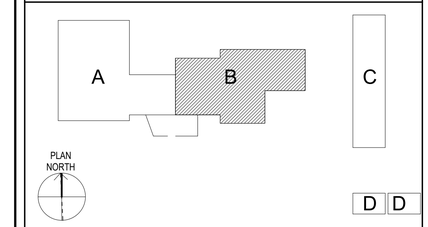

SCALES

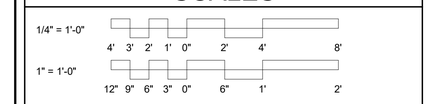

KEY NOTES

001	5" THICK SLAB-ON-GRADE OVER 15 MIL VAPOR RETARDER OVER PREPARED SUBGRADE. REINFORCE SLAB WITH #4 @ 16" ON CENTER EACH WAY AT TOP OF SLAB. TOP OF SLAB ELEVATION = 0'-0" UNLESS OTHERWISE NOTED.
102	4" CONCRETE SLAB OVER 1 1/2", 20 GA FORM DECK (2-1/2" CONCRETE OVER DECK FLUTES) REINFORCED WITH 6X6-W4.0XW4.0

PLAN NOTES

1.	FINISH FLOOR ELEVATION = 0'-0" CORRESPONDS TO ACTUAL ELEVATION = 610.60', RE: CIVIL
2.	RE: S0.1 THROUGH S0.3 FOR STRUCTURAL GENERAL NOTES
3.	RE: S1.5 FOR TYPICAL FOUNDATION DETAILS
4.	RE: S2.10 FOR TYPICAL STEEL SECTIONS AND DETAILS
5.	RE: S4.10 FOR TYPICAL MASONRY SECTIONS AND DETAILS
6.	ALL COLUMNS SHALL BE CENTERED ON GRIDLINES UNLESS OTHERWISE NOTED
7.	ALL SPREAD FOOTINGS SHALL BE CENTERED UNDER COLUMN CENTERLINES UNLESS OTHERWISE NOTED
8.	RE: ARCH AND MEP DRAWINGS FOR LOCATIONS OF OPENINGS, PENETRATIONS, CURBS, SLAB SLOPES AND DEPRESSIONS.

Texas Department of Transportation

COPYRIGHT © 2021

Jacobs
1999 Bryan Street, Suite 1200
Dallas, Tx 75201

JACOBS ENGINEERING GROUP, INC
TEXAS REGISTRATION #2966

GABRIEL A. SERNA
99793
04/21/2021

DALLAS DISTRICT (18)
COLLIN COUNTY
McKinney Area Engineering and Maintenance Facility
2205 TX-5, McKinney, TX 75069
PROJECT NO. 18-470420001 2

ISSUED: 2021.04.21
DRAWN BY: JI
REVISIONS:

SAFE ROOM PLANS AND DETAILS

S4.1

THIS DRAWING CREATED FOR PRODUCTION ON 22"x34" SHEET SIZE. DO NOT SCALE PRINTS.

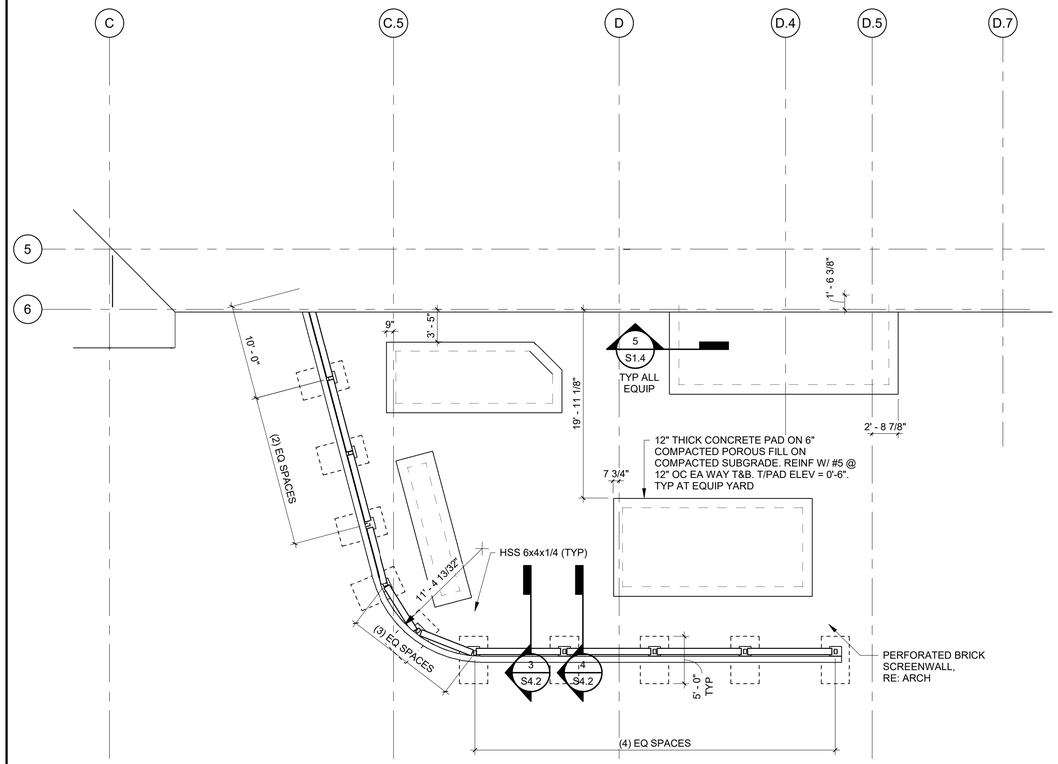

1 PARTIAL FOUNDATION PLAN AT SCREEN WALL
1/8" = 1'-0"

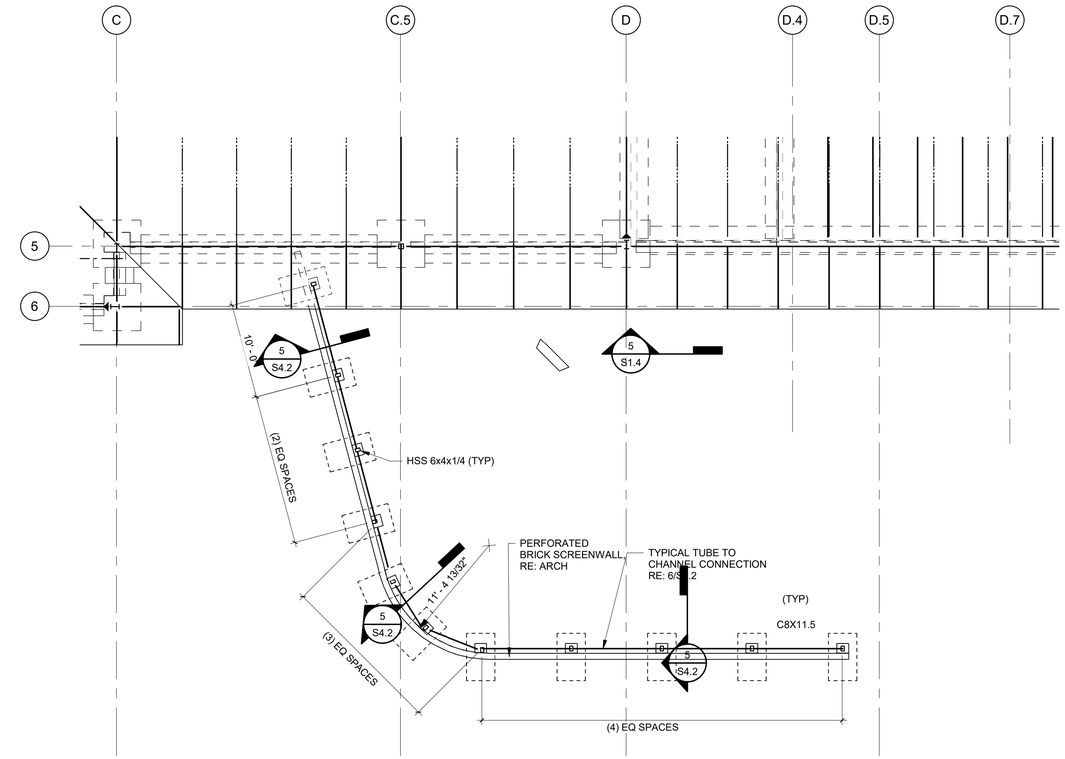

2 PARTIAL FRAMING PLAN AT SCREEN WALL
1/8" = 1'-0"

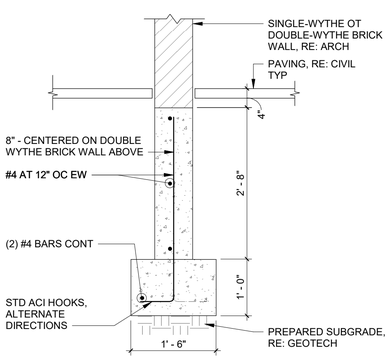

3 SECTION
3/4" = 1'-0"

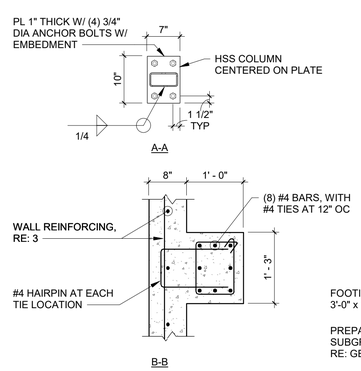

4 SECTION
3/4" = 1'-0"

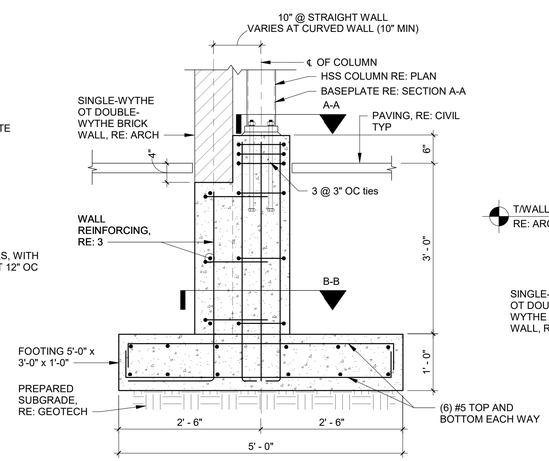

5 SECTION
3/4" = 1'-0"

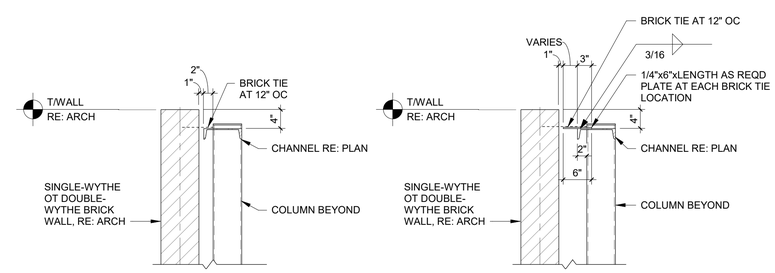

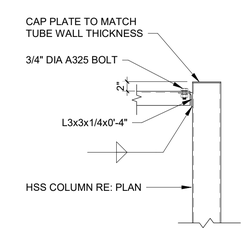

6 SECTION
3/4" = 1'-0"

Texas Department of Transportation
COPYRIGHT © 2021

Jacobs
1999 Bryan Street, Suite 1200
Dallas, Tx 75201
JACOBS ENGINEERING GROUP, INC
TEXAS REGISTRATION #2966
GABRIEL A. SERNA
99793
04/21/2021

DALLAS DISTRICT (18)
COLLIN COUNTY
McKinney Area Engineering and Maintenance Facility
2205 TX-5, McKinney, TX 75069
PROJECT NO. 18-470420012

ISSUED: 2021.04.21
DRAWN BY: AG
REVISIONS:

EQUIPMENT YARD PLAN AND DETAILS

S4.2

THIS DRAWING CREATED FOR PRODUCTION ON 22"x34" SHEET SIZE DO NOT SCALE PRINTS.

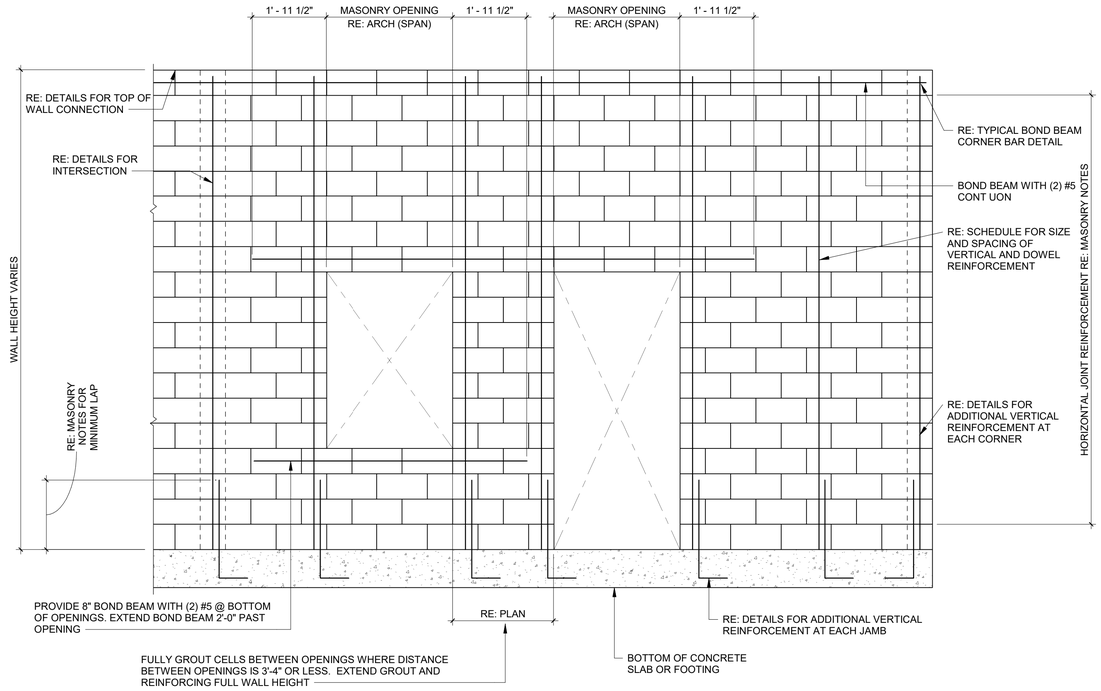

1 02-101-TYPICAL CMU WALL ELEVATION
1/2" = 1'-0"

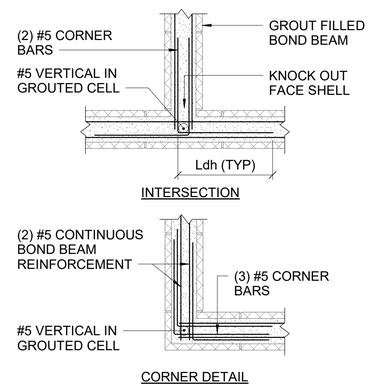

2 TYPICAL CMU BOND BEAM REINFORCEMENT
3/4" = 1'-0"

LINTEL SCHEDULE

SIZE "W" x "D"	MAXIMUM SPAN	REINFORCEMENT
8" x 8"	4'-6"	(2) #5 CONTINUOUS
10" x 8"	6'-4"	(2) #5 CONTINUOUS
10" x 16"	10'-0"	(4) #5 CONTINUOUS
10" x 16"	14'-0"	(4) #6 CONTINUOUS

NOTES:
1. PROVIDE CMU LINTELS ABOVE ALL WALL OPENINGS.
2. EXTEND LINTELS 24" PAST OPENING.
3. SPAN IS DEFINED BY ROUGH MASONRY OPENING, REFER TO WALL ELEVATION.
4. REFER TO ARCH FOR SIZE AND LOCATION OF OPENINGS.
5. PRECAST CONCRETE LINTEL MAY BE USED IN LIEU OF MASONRY LINTEL AT CONTRACTOR'S OPTION. AMOUNT AND SIZE OF REINFORCING TO MATCH SCHEDULED REINFORCING FOR MASONRY LINTEL. USE CONCRETE WITH MINIMUM f'c = 3,000 PSI AT 28 DAYS.

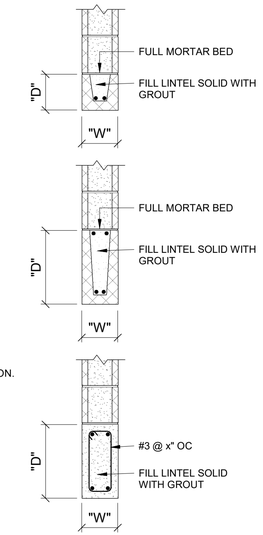

3 LINTEL DETAIL
3/4" = 1'-0"

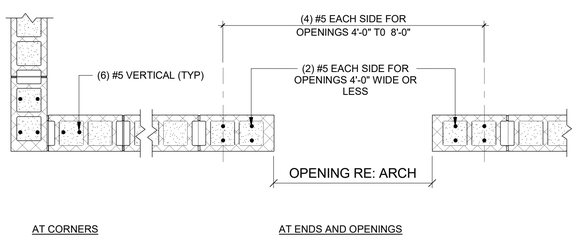

4 TYPICAL REINFORCEMENT AT CMU WALLS
3/4" = 1'-0"

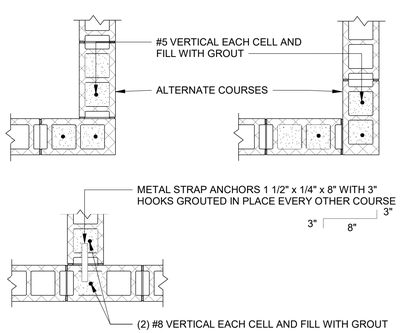

5 TYPICAL CMU INTERSECTION PLAN
3/4" = 1'-0"

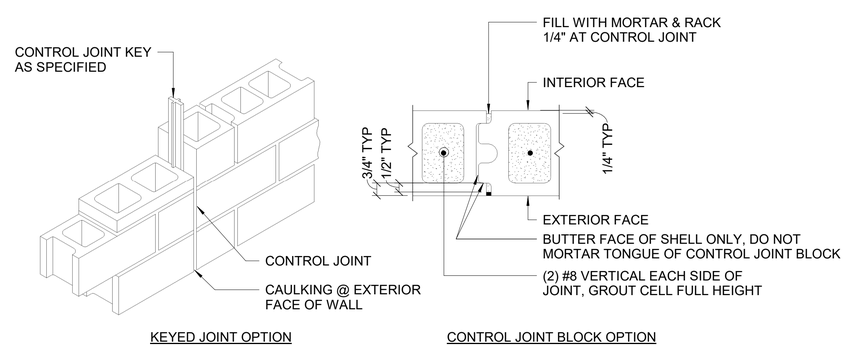

NOTES:
1. USE OF CONTROL JOINT BLOCK OR RUBBER LIKE MATERIAL KEY AND SASH BLOCK IS CONTRACTOR OPTION.
2. LOCATE CONTROL JOINTS IN WALLS AT A MAXIMUM OF 24'-0" AND A MAXIMUM OF 12'-0" OC FROM A CORNER.
3. HORIZONTAL JOINT REINFORCEMENT SHALL BE DISCONTINUOUS AT CONTROL JOINTS. BOND BEAM REINFORCEMENT AT TOP OF WALL SHALL BE CONTINUOUS THROUGH CONTROL JOINTS.

6 02-105-CMU WALL CONTROL JOINT DETAIL
3/4" = 1'-0"

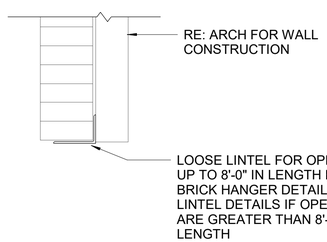

7 LOOSE LINTEL ANGLE DETAIL
3/4" = 1'-0"

LOOSE LINTEL SCHEDULE FOR MASONRY VENEER

MAXIMUM SPAN	SIZE OF ANGLE
6'-0"	L7x4x1/2
8'-0"	L7x4x5/8

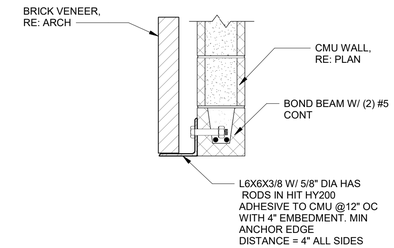

8 ANCHORED LINTEL DETAIL
1" = 1'-0"

Texas Department of Transportation
COPYRIGHT © 2021

Jacobs
1999 Bryan Street, Suite 1200
Dallas, Tx 75201
JACOBS ENGINEERING GROUP, INC
TEXAS REGISTRATION #2966
GABRIEL A. SERNA
99793
04/21/2021

DALLAS DISTRICT (18)
COLLIN COUNTY
McKinney Area Engineering and Maintenance Facility
2205 TX-5, McKinney, TX 75069
PROJECT NO. 18-4704200012

ISSUED: 2021.04.21
DRAWN BY: Author
REVISIONS:

TYPICAL MASONRY SECTIONS AND DETAILS
S4.10

THIS DRAWING CREATED FOR PRODUCTION ON 22"x34" SHEET SIZE. DO NOT SCALE PRINTS.

NOTES:
1. AXIAL LOAD IS FACTORED WIND LOAD 1.0W.
2. (+/-) XK DENOTES TENSION/COMPRESSION LOAD.

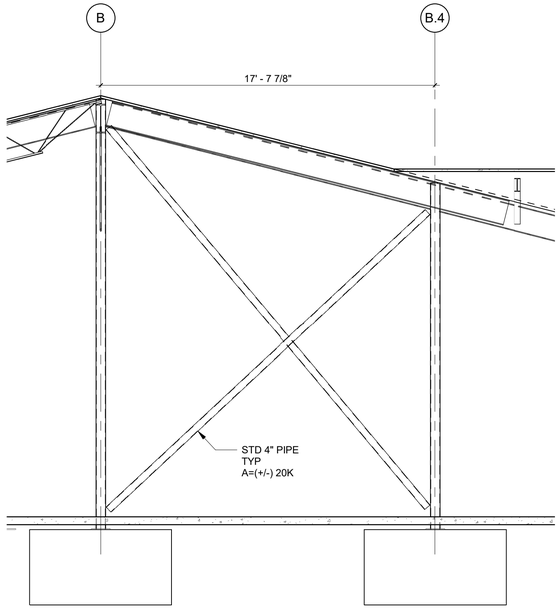

1 BRACED FRAME ELEVATION - BF-1
1/4" = 1'-0"

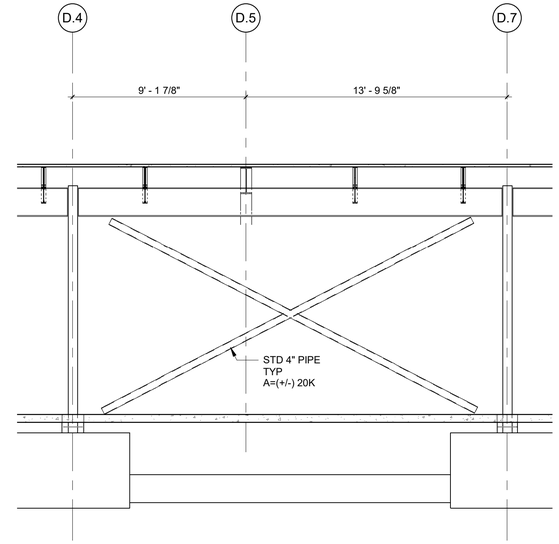

2 BRACED FRAME ELEVATION - BF-2
1/4" = 1'-0"

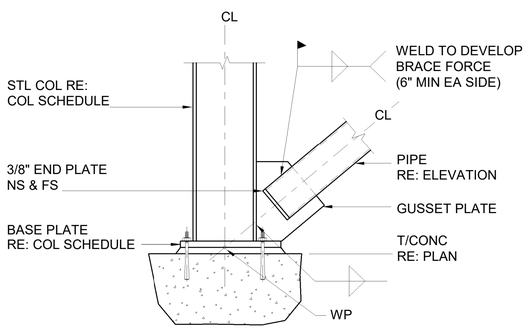

3 CROSSBRACE CONNECTION DETAIL
1" = 1'-0"

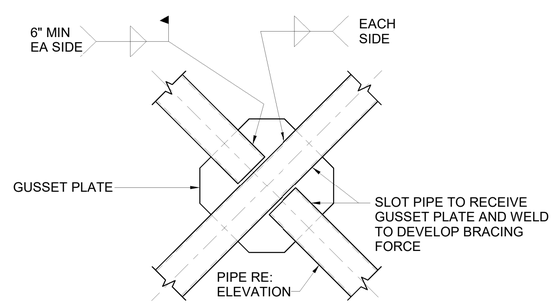

4 CROSSBRACE CONNECTION DETAIL
1" = 1'-0"

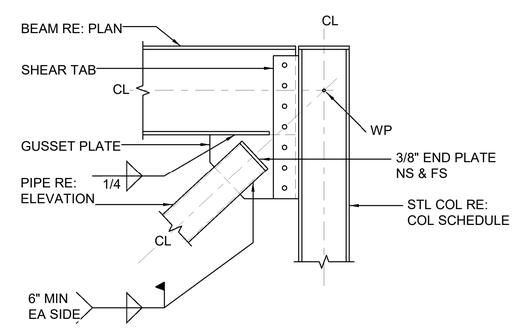

NOTE:
1. DESIGN BOLTS AND SHEAR TAB FOR SHEAR AND MOMENT.

5 CROSSBRACE CONNECTION DETAIL
1" = 1'-0"

Texas Department of Transportation

COPYRIGHT © 2021

Jacobs
1999 Bryan Street, Suite 1200
Dallas, Tx 75201

JACOBS ENGINEERING
GROUP, INC
TEXAS REGISTRATION #2966

GABRIEL A. SERNA
99793
04/21/2021

DALLAS DISTRICT (18)
COLLIN COUNTY
McKinney Area Engineering and Maintenance Facility
2205 TX-5, McKinney, TX 75069
PROJECT NO. 18-4704200012

ISSUED: 2021.04.21
DRAWN BY: PA
REVISIONS:

ELEVATIONS
S5.1

THIS DRAWING CREATED
FOR PRODUCTION ON
22"x34" SHEET SIZE.
DO NOT SCALE PRINTS.

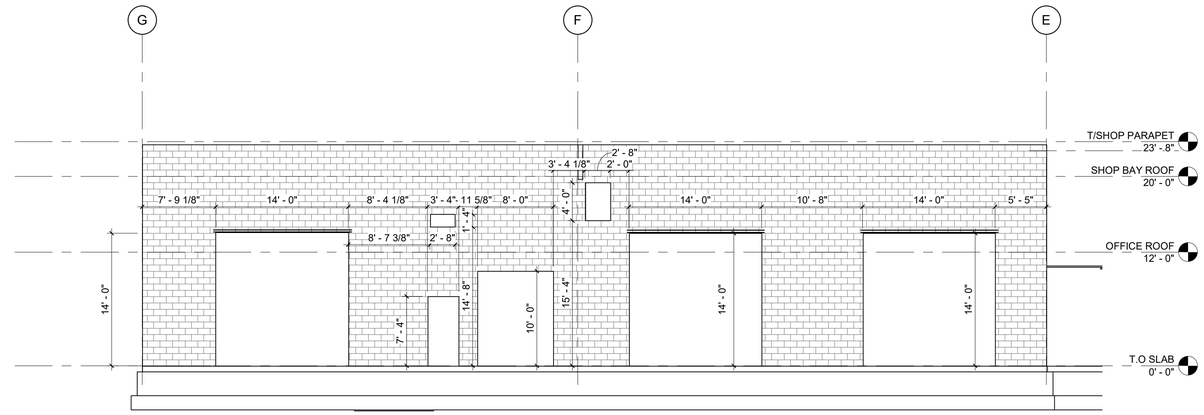

1 CMU WALL ELEVATION 1

1/8" = 1'-0"

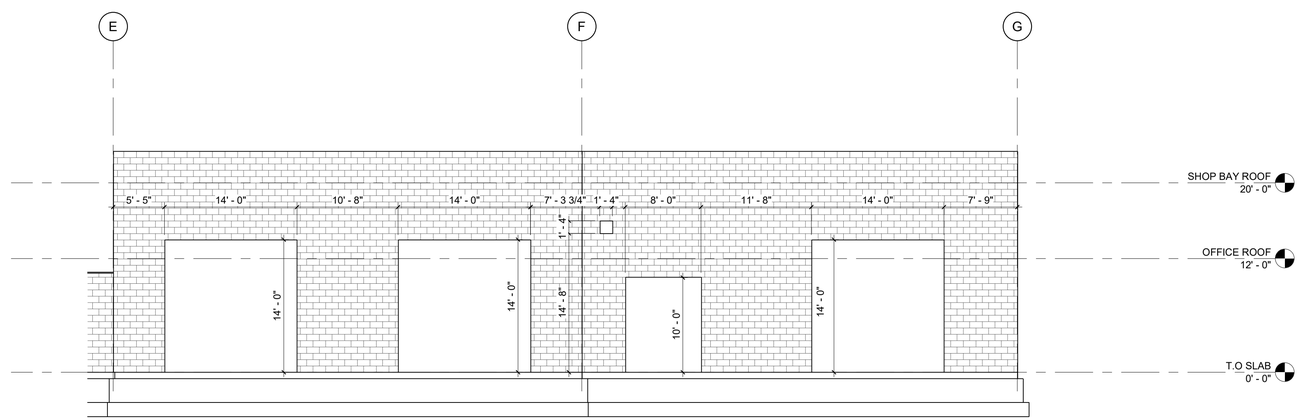

2 CMU WALL ELEVATION 2

1/8" = 1'-0"

Texas Department of Transportation

COPYRIGHT © 2021

Jacobs
1999 Bryan Street, Suite 1200
Dallas, Tx 75201

JACOBS ENGINEERING GROUP, INC
TEXAS REGISTRATION #2966

GABRIEL A. SERNA
99793
04/21/2021

DALLAS DISTRICT (18)
COLLIN COUNTY
McKinney Area Engineering and Maintenance Facility
2205 TX-5, McKinney, TX 75069
PROJECT NO. 18-470420001 2

ISSUED: 2021.04.21
DRAWN BY: PA
REVISIONS:

ELEVATIONS

S5.2

THIS DRAWING CREATED FOR PRODUCTION ON 22"x34" SHEET SIZE. DO NOT SCALE PRINTS.

OCCUPANCY SCHEDULE

#	ROOM NAME	AREA (SF)	USE TYPE	LOAD FACTOR	OCCUPANT LOAD
100	VESTIBULE	195.18 SF	BUSINESS	150	2
101	RECEPTION / WAITING	146.47 SF	BUSINESS	150	1
101A	SUPPLY	56.12 SF	STORAGE	300	1
102	OPEN LIBRARY	462.58 SF	BUSINESS	150	4
103	CORRIDOR	518.43 SF	BUSINESS	150	4
104	CONFERENCE	284.69 SF	ASSEMBLY	15	19
105	MAINTENANCE OFFICE	1161.81 SF	BUSINESS	150	8
105A	OFFICE	119.86 SF	BUSINESS	150	1
105B	OFFICE	122.39 SF	BUSINESS	150	1
105C	HUDDLE	122.39 SF	ASSEMBLY	15	9
105D	CALL	14.56 SF	BUSINESS	150	1
106	VESTIBULE	76.04 SF	BUSINESS	150	1
107	MEETING / TRAINING	1516.09 SF	ASSEMBLY	15	102
107A	MECHANICAL CLOSET	112.59 SF	STORAGE	300	1
107B	STORAGE	42.28 SF	STORAGE	300	1
108	LUNCH / BREAK	432.55 SF	ASSEMBLY	15	29
109	WOMEN	168.97 SF	BUSINESS	150	2
110	JANITOR	60.42 SF	STORAGE	300	1
111	MEN	210.35 SF	BUSINESS	150	2
112	WELLNESS	93.21 SF	BUSINESS	150	1
113	ENGINEERING OFFICE	1828.14 SF	BUSINESS	150	13
113A	COPY / PLOTTER	139.17 SF	BUSINESS	150	1
113B	OFFICE	116.32 SF	BUSINESS	150	1
113C	OFFICE	116.23 SF	BUSINESS	150	1
113D	OFFICE	116.15 SF	BUSINESS	150	1

OCCUPANCY SCHEDULE

#	ROOM NAME	AREA (SF)	USE TYPE	LOAD FACTOR	OCCUPANT LOAD
113E	HUDDLE	116.15 SF	ASSEMBLY	15	8
113F	CALL	14.56 SF	BUSINESS	150	1
114	CORRIDOR	763.85 SF	BUSINESS	150	6
115	MECHANICAL	139.45 SF	STORAGE	300	1
116	MDF	120.63 SF	STORAGE	300	1
117	ELEC.	128.57 SF	STORAGE	300	1
118	MENS LOCKER ROOM	574.36 SF	LOCKERS	50	12
119	WOMENS LOCKER ROOM	277.92 SF	LOCKERS	50	6
120	MECH.	145.23 SF	STORAGE	300	1
121	CORRIDOR	294.64 SF	BUSINESS	150	2
122	LAB OFFICES	311.66 SF	BUSINESS	150	3
122A	SOILS	365.25 SF	BUSINESS	150	3
123	OVEN ROOM	318.73 SF	BUSINESS	150	3
123A	SHAKER / BREAKER	353.12 SF	BUSINESS	150	3
124	LAB STORAGE	148.96 SF	STORAGE	300	1
125	ELEC	141.44 SF	STORAGE	300	1
126	TOOLS, STOCK ROOM & INVENTORY	784.60 SF	STORAGE	300	3
127	OFFICE	124.77 SF	BUSINESS	150	1
128	VEHICLE SHOP BAYS	3811.61 SF	WAREHOUSE	500	8
129	EQUIPMENT ROOM	411.24 SF	STORAGE	300	2
130	HERBICIDE STORAGE	283.52 SF	STORAGE	300	1
131	TRUCK WASH BAY	1213.62 SF	WAREHOUSE	500	3
		19076.87 SF			279
	WALL THICKNESS & CHASES	1762.80 SF	BUSINESS	150	12
	TOTAL GROSS BUILDING AREA	**20,892.12 SF**	**TOTAL OCCUPANTS**		**295**

LIFE SAFETY PLAN LEGEND

ASSEMBLY (A-2)
STORAGE (S-1)
BUSINESS (B)
WAREHOUSE
LOCKERS
1 HR FIRE RATED PARTITION
3 HR FIRE RATED PARTITION
CLASS 'A' FIRE EXTINGUISHER LOCATION 75-FT. MAX. TRAVEL DISTANCE TO NEAREST
KNOX BOX LOCATION
COMMON PATH OF TRAVEL X-FT.
MAX. EXIT ACCESS DISTANCE FROM FLOOR WITH (1) EXIT (TABLE 1006.3.2 ALLOWS 75-FT.)

PLUMBING FIXTURE CALCUATIONS

OCCUPANCY: Business - B			OCCUPANTS: 295			(148 MALE 148 FEMALE)	
Buildings for the transaction of business, professional services, other services involving merchandise, office buildings, banks, light industrial and similar uses	WATER CLOSET		LAVATORIES		BATHTUBS OR SHOWERS	DRINKING FOUNTAINS	OTHER
	MALE	FEMALE	MALE	FEMALE			
REQUIRED:	**4**	**4**	**3**	**3**	–	**3**	**1 Service Sink**
PROVIDED:	8	4	5	3	2	3	1 Service Sink

FIXTURE CALCULATION NOTE:
OWNER PROVIDED EMPLOYEE COUNT ILLUSTRATED LARGER PERCENTAGE OF MEN VS WOMEN

OCCUPANCY CLASSIFICATION

IBC 508.3 - NONSEPERATED OCCUPANCIES
- 508.3.1 OCCUPANCY CLASSIFICATION. NONSEPERATED OCCUPANCIES SHALL BE INDIVIDUALLY CLASSIFIED IN ACCORDANCE WITH SECTION 302.1. WHERE A BUILDING CONTAINS MORE THAN ONE OCCUPANCY GROUP, THE BUILDING
- 508.3.2 ALLOWABLE BUILDING AREA. THE ALLOWABLE BUILDING AREA SHALL BE BASED ON THE MOST RESTRICTIVE ALLOWANCES FOR THE OCCUPANCY GROUPS UNDER CONSIDERATION FOR THE TYPE OF CONSTRUCTION OF THE BUILDING IN ACCORDANCE WITH SECTION 503.1
- CONSIDERING TYPE 2B NON-SPRINKLERED
  1. B: 23,000SF
  2. S-1: 17,500SF

- 506.3.3 FRONTAGE INCREASE CALCULATION
  1. If= [F/P - 0.25] W/30
  2. If = [862 / 862 - 0.25] 30/30 = 0.75

- 506.2.2 MIXED-OCCUPANCY, ONE STORY BUILDING. ALLOWABLE AREA WITH NO MORE THAN ONE STORY SHALL BE DETERMINED PER SECTION 508.1 BASED ON EQUATION 5-1

TOTAL BUILDING AREA = 20,893SF
MEETING /TRAINING (A-2) = 1,516 SF AND IS AN ACCESSORY USE

USING THE MOST RESTRICTIVE S-1
- ALLOWABLE AREA = 17,500 SF + (17,500 X 75%) = 17,500 +13,125 = 30,625 SF

BUILDING CODE SUMMARY

OCCUPANCY CLASSIFICATION	B - BUSINESS GROUP, S-1, MOTOR-VEHICLE REPAIR GARAGE				SECTION 304
		ALLOWABLE (B)	ALLOWABLE (S-1)	PROVIDED	
CONSTRUCTION TYPE	TYPE IIB				
BUILDING HEIGHT	NS	55 FEET	55 FEET	23 FT	TABLE 504.3
NUMBER OF STORIES	NS	3 STORIES	3 STORIES	1 STORY	TABLE 504.4
ALLOWABLE AREA	NS	23,000 SF	17,500 SF	20,892 SF	TABLE 506.2
		REFER TO FRONTAGE INCREASE CALCULATION			

FIRE-RESISTIVE RATING FOR BUILDING ELEMENTS

STRUCTURAL FRAME	0 HR	TABLE 601 TYPE II B CONSTRUCTION
BEARING WALLS - EXTERIOR	0 HR	
BEARING WALLS - INTERIOR	0 HR	
NON-BEARING WALLS & PARTITIONS: EXTERIOR	0 HR	
NON-BEARING WALLS & PARTITIONS: INTERIOR	0 HR	TABLE 602
FLOOR CONSTRUCTION - INCLUDING SUPPORTING BEAMS AND JOISTS	0 HR	TABLE 601 TYPE II B CONSTRUCTION
ROOF CONSTRUCTION - INCLUDING SUPPORTING BEAMS AND JOISTS	0 HR	

INCIDENTAL USE AREA SEPERATION

NONE, PER TABLE 509

MEANS OF EGRESS

MAXIMUM DEAD-END CORRIDOR:	20 FT	SECTION 1020.4
MAXIMUM TRAVEL DISTANCE	200 FT , A & B OCCUPANCY, 300 FT S-2 OCCUPANCY	TABLE 1017.2
EGRESS CAPACITY:		
OTHER EGRESS COMPONENTS: DOORS	0.2" / PER PERSON WITH SPRINKLER SYSTEM 295 PEOPLE X 0.2" = 59" REQUIRED	SECTION 1005.3.2
OCCUPANT LOAD FACTOR:	SEE OCCUPANCY SCHEDULE	

FIRE PROTECTION AND LIFE SAFETY SYSTEMS

SECTION 903 - AUTOMATIC SPRINKLER SYSTEMS **(NONE PROVIDED, BUILDING IS NON-SPRINKLERED)**
903.2.9.1 REPAIR GARAGES
- #4: A GROUP S-1 FIRE AREA USED FOR THE REPAIR OF COMMERCIAL MOTOR VEHICLES WHERE THE FIRE AREA EXCEEDS 5,000 SF. **(ROOM #128 = 3,811 SF < 5,000 SF)**
- BUILDING IS NON-SPRINKLERED THE BUILDING WAS SEPERATED INTO 3 FIRE AREAS WITH A 3-HR WALL PER TABLE 707.3.10. THIS IS TO MAINTAIN VEHICLE SHOP IS LESS THAN 5,000 SF

SECTION 907 - FIRE ALARM AND DETECTION SYSTEMS **(NONE PROVIDED, BUILDING HAS NO ALARAM)**
- 907.2.1 REQUIRED IN A-OCCUPANCY WHEN OCCUPANT LOAD IS 300 OR MORE **(DOES NOT APPLY)**
- 907.2.2 REQUIRED IN B-OCCUPANCY WHEN OCCUPANT LOAD IS 500 OR MORE **(DOES NOT APPLY)**

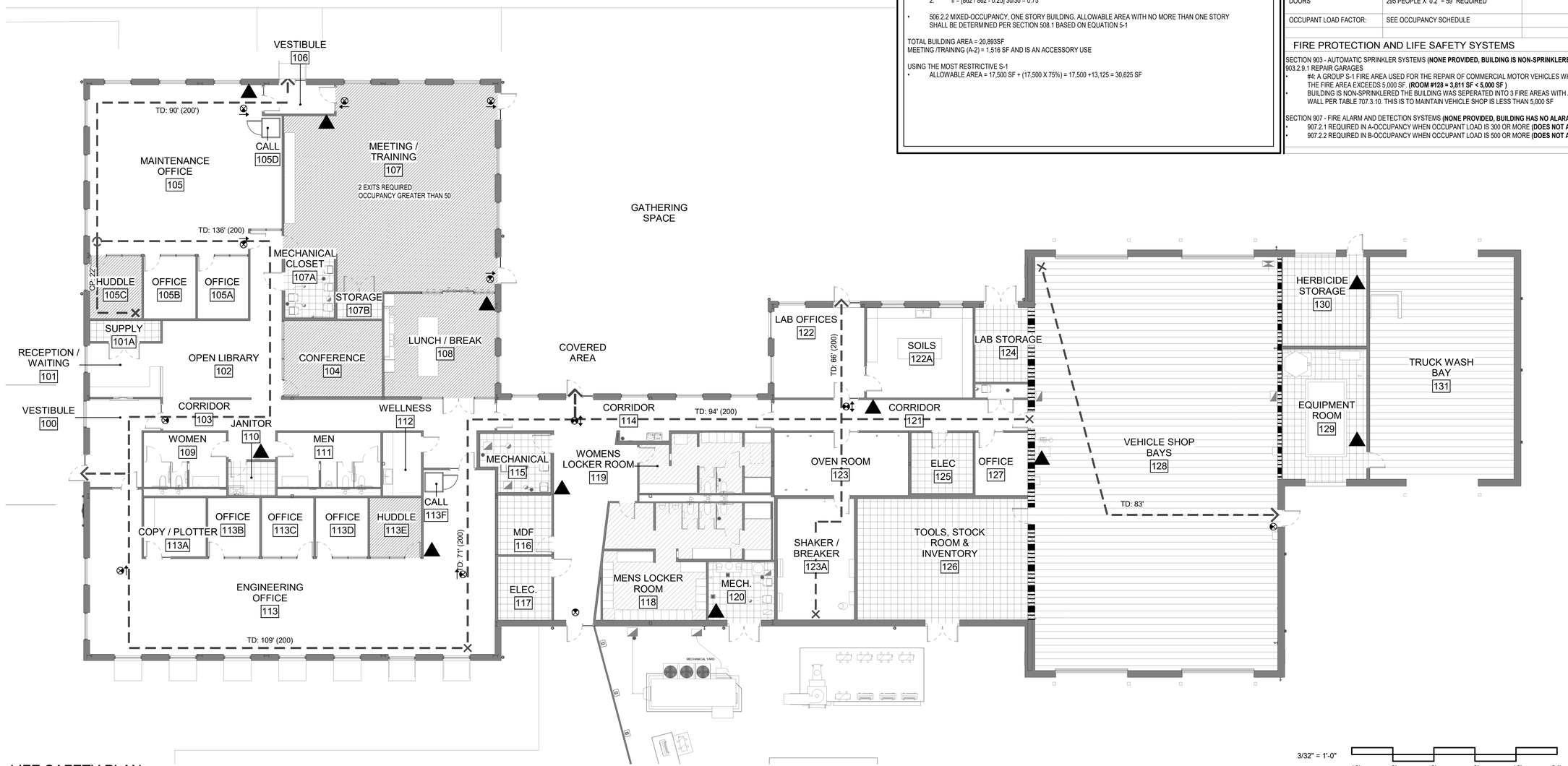

1 LIFE SAFETY PLAN
3/32" = 1'-0"

3/32" = 1'-0"
16' 8' 0' 8' 16' 24'

Texas Department of Transportation
COPYRIGHT © 2021

Jacobs
1999 Bryan Street, Suite 1200
Dallas, Tx 75201
JACOBS ENGINEERING GROUP, INC
TEXAS REGISTRATION #2966

REGISTERED ARCHITECT STEVEN JOHN TYERMAN STATE OF TEXAS
04/21/2021

DALLAS DISTRICT (18)
COLLIN COUNTY
McKinney Area Engineering and Maintenance Facility
2205 TX-5, McKinney, TX 75069
PROJECT NO. 18-47042001 2

ISSUED: 2021.04.21
DRAWN BY: I. Eloualid
REVISIONS:

LIFE SAFETY PLAN
A0.1

THIS DRAWING CREATED FOR PRODUCTION ON 22"x34" SHEET SIZE. DO NOT SCALE PRINTS.

SITE NOTES

1. ARCHITECTURAL SITE PLAN DERIVED FROM CIVIL ENGINEERING / SITE SURVEY PROVIDED BY: LTRA ENGINEERING
2. SITE INFORMATION CONCERNING EXISTING CONDITIONS IS SUITABLE FOR PREPARATION OF THE DRAWINGS & GIVEN FOR THE CONTRACTOR'S CONVENIENCE.
2. ARCHITECT DOES NOT GUARANTEE ACCURACY OF SUCH INFORMATION. IT IS CONTRACTOR'S RESPONSIBILITY TO INFORM HIMSELF & NECESSARY OFFICIALS AS TO THE CONDITIONS AFFECTING THE WORK.
2. REFER TO & COORDINATE WITH:
   - CIVIL ENGINEER DRAWINGS
   - LANDSCAPE ARCHITECT DRAWINGS
   - MEP ENGINEER DRAWINGS (FOR SITE LIGHTING & UTILITY CONNECTIONS).
5. ALL SITE DRAINAGE SHALL BE AWAY FROM BUILDING.
6. INSTALL KNOX BOX NEAR FRONT ENTRANCE WHERE REQUIRED.
7. NOTIFY ARCHITECT OF ANY DISCREPANCIES.

PARKING TABLE

REQUIRED 21,000 SQFT / 200 = 105 STALLS (MIN.)

PROVIDED
NON-SECURE/VISITOR: 28 + 2 ACCESSIBLE = 30 STALLS
SECURE EMPLOYEE: 109 + 5 ACCESSIBLE = 114 STALLS

REMAINING SPACES SHOWN ARE FOR TXDOT VEHICLES

KEYED SITE NOTES

1. SECURITY GATE
2. NEW CONCRETE CURB & GUTTER (REF: CIVIL ENGINEER)
3. LANDSCAPED AREA, REF: LANDSCAPE DRAWINGS
4. NEW CONCRETE SIDEWALK (BROOM FINISH)
5. NEW CONCRETE CURB RAMP (REF: TO CIVIL ENGINEER)
   ELEVATION CHANGE = 6-IN. MAX.
   DIRECT SLOPE = 1:12 MAX. CROSS-SLOPE = 1:50 MAX.
   RAMP SURFACE = 3/4" GROOVES @ 2" O.C. MAX.
   CONTRAST FROM ADJOINING SURFACES (REF. ADA SECTION 406)
   PROVIDE LEVEL* LANDINGS @ TOP & BOTTOM OF RAMP
   * SLOPE IN ALL DIRECTIONS = 1:50 MAX. (REF: ADA SECTION 502)
6. ACCESSIBLE PARKING SPACE & ACCESS AISLE SHALL BE LEVEL WITH SURFACE SLOPES IN ALL DIRECTIONS = 1:50 MAX. (REF: 12/A1.2 FOR SIGNAGE DETAIL. ADA SECTION 502)
7. ASPHALT PARKING SURFACE W/ STRIPING (REF: CIVIL DRAWINGS)
8. NEW MONUMENT SIGN (REF: 1/A1.2 FOR DETAILS)
9. MECHANICAL YARD (REF: MEP ENGINEER, MATCH SIDEWALK FINISH)
10. FIRE LANE AND STRIPING (REF: CIVIL ENGINEER)
11. ENTRY SIGN, QUANTITY 2 (REF: 6/A1.2 FOR DETAILS)
12. SEAT WALL (REF: 7/A1.2 FOR DETAILS)
13. FLAG POLE, QUANTITY 1 (REF: 9/A1.2 FOR DETAILS)

KEYPLAN

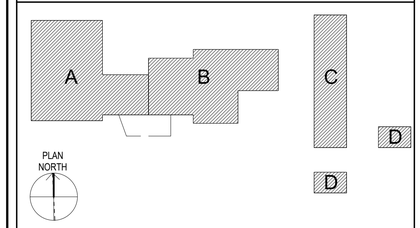

SCALES

1/32" = 1'-0"

32' 24' 16' 8' 0' 16' 32' 64'

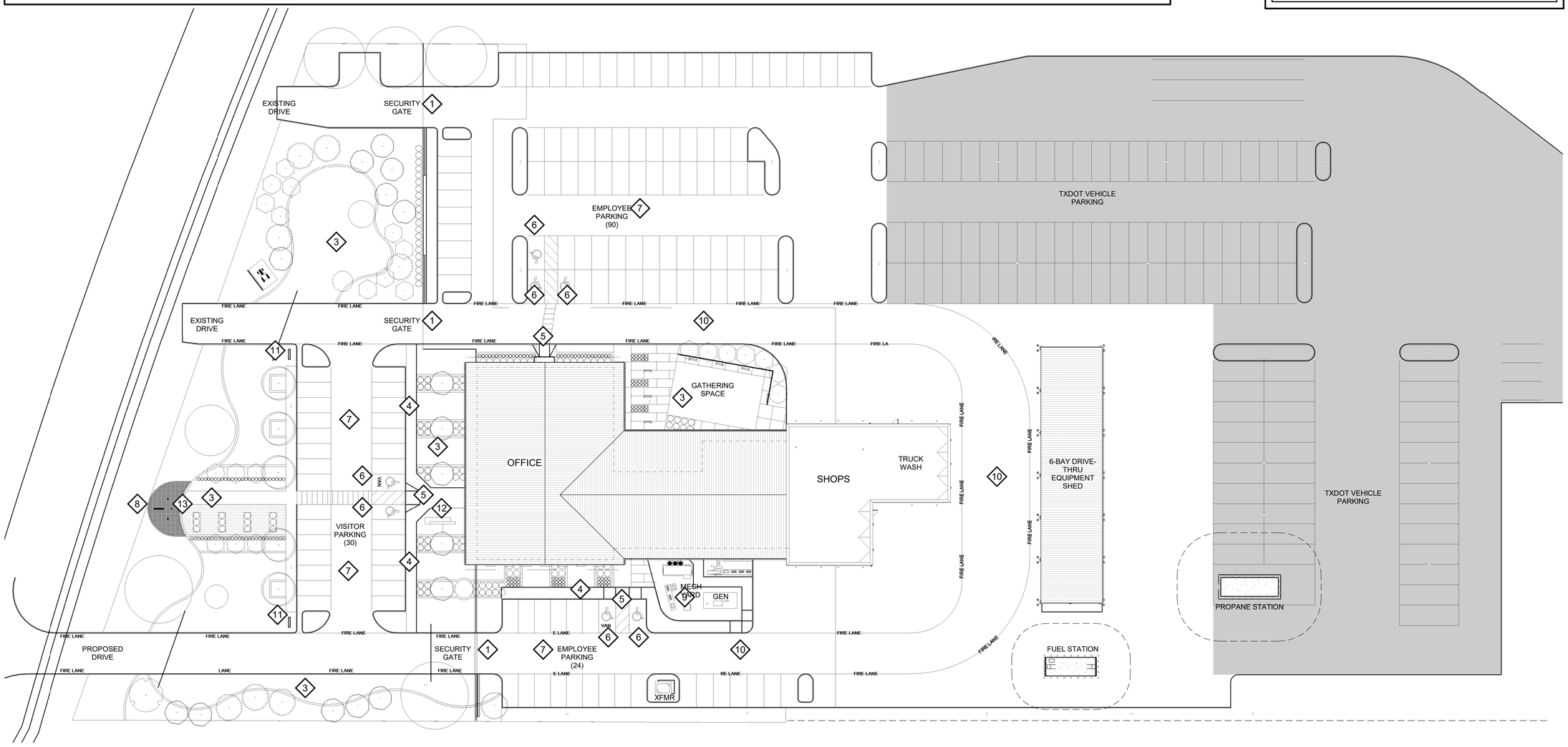

1 SITE PLAN
1/32" = 1'-0"

Texas Department of Transportation

COPYRIGHT © 2021

Jacobs
1999 Bryan Street, Suite 1200
Dallas, Tx 75201
JACOBS ENGINEERING GROUP, INC
TEXAS REGISTRATION #2966

REGISTERED ARCHITECT STEVEN JOHN TREMME 9414 STATE OF TEXAS
04/21/2021

DALLAS DISTRICT (18)
COLLIN COUNTY
McKinney Area Engineering and Maintenance Facility
2205 TX-5, McKinney, TX 75069
PROJECT NO. 18-470420012

ISSUED: 2021.04.21
DRAWN BY: I. Eloualid
REVISIONS:

ARCH SITE PLAN
A1.1

THIS DRAWING CREATED FOR PRODUCTION ON 22"x34" SHEET SIZE. DO NOT SCALE PRINTS.

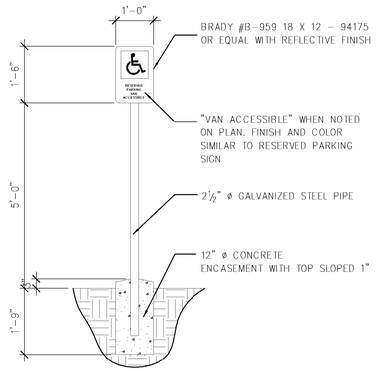

12 ACCESSIBLE SIGN
SCALE: 1/2" = 1'-0"

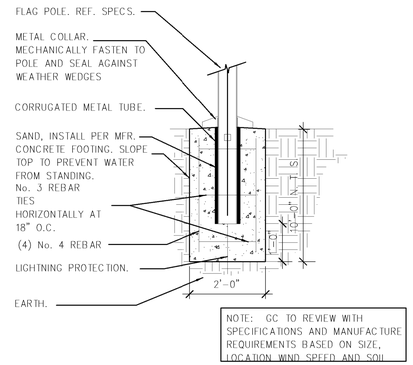

9 FLAG POLE BASE
SCALE: 1/2" = 1'-0"

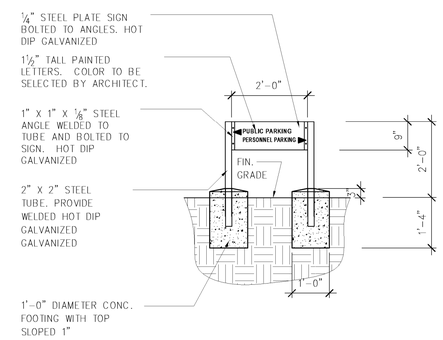

6 ENTRY SIGN ELEVATION
SCALE: 1/2" = 1'-0"

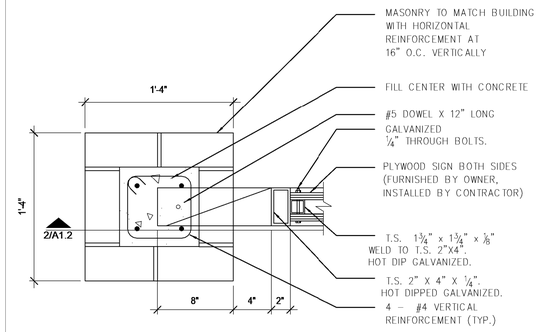

3 SIGN PLAN VIEW
SCALE: 1 1/2" = 1'-0"

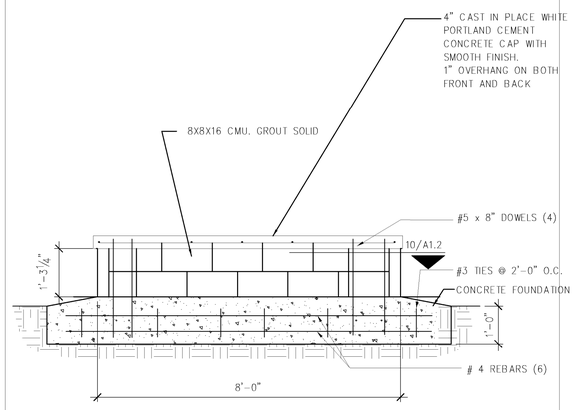

8 SEAT WALL SECTION
SCALE: 1/2" = 1'-0"

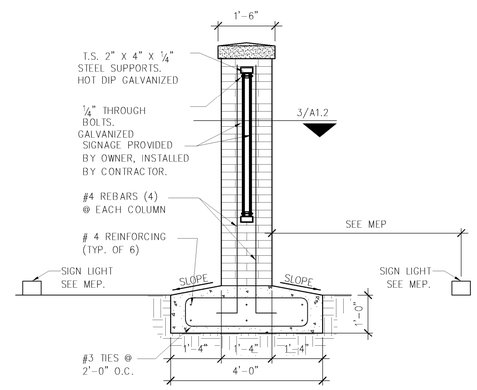

5 SIGN SECTION
SCALE: 1/2" = 1'-0"

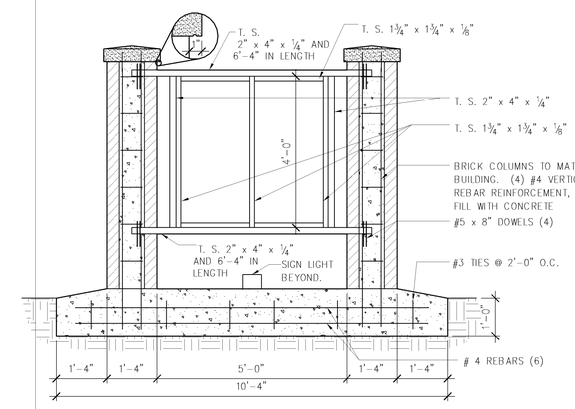

2 SIGN SECTION
SCALE: 1/2" = 1'-0"

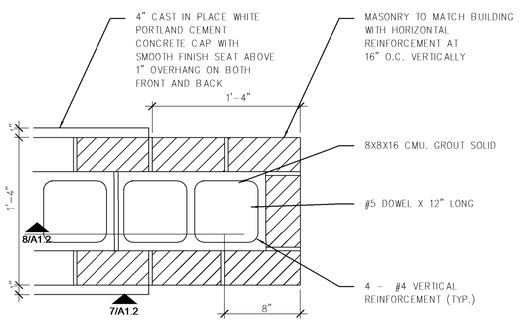

10 SEAT SECTION
SCALE: 1/2" = 1'-0"

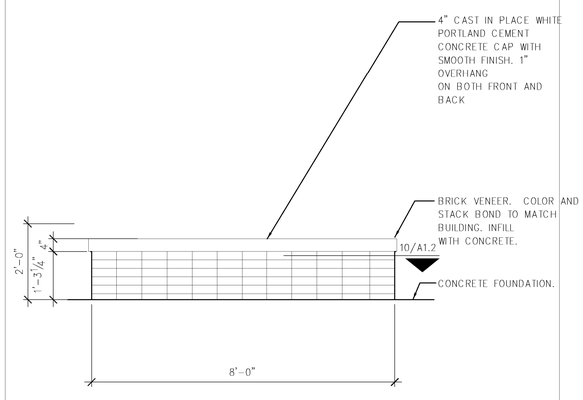

7 SEAT WALL ELEVATION
SCALE: 1/2" = 1'-0"

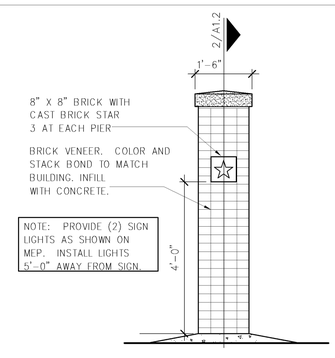

4 SIGN ELEVATION
SCALE: 1/2" = 1'-0"

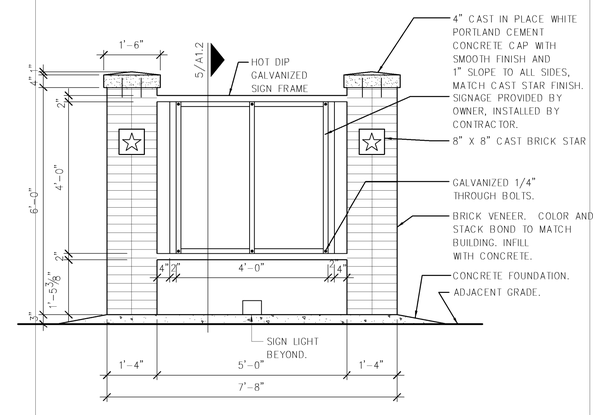

1 SIGN ELEVATION
SCALE: 1/2" = 1'-0"

Texas Department of Transportation
COPYRIGHT © 2021

Jacobs
1999 Bryan Street, Suite 1200
Dallas, Tx 75201
JACOBS ENGINEERING GROUP, INC
TEXAS REGISTRATION #2966

REGISTERED ARCHITECT STEVEN JOHN THERMAN 18416 STATE OF TEXAS
04/21/2021

DALLAS DISTRICT (18)
COLLIN COUNTY
McKinney Area Engineering and Maintenance Facility
2205 TX-5, McKinney, TX 75069
PROJECT NO. 18-470420012

ISSUED: 2021.04.21
DRAWN BY: Author
REVISIONS:

SITE DETAILS
A1.2

THIS DRAWING CREATED FOR PRODUCTION ON 22"x34" SHEET SIZE. DO NOT SCALE PRINTS.

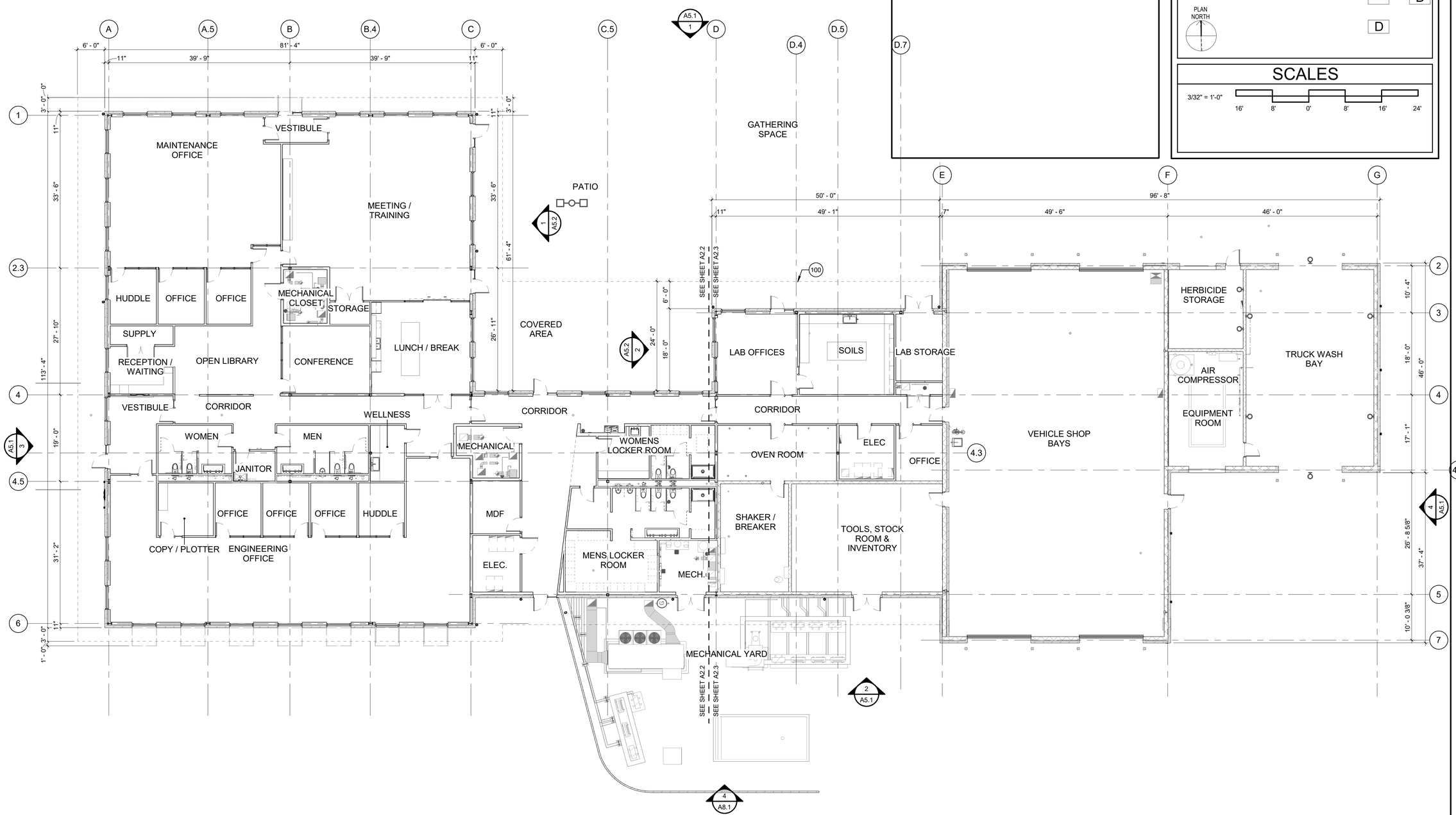

1 ARCHITECTURAL FLOOR PLAN OVERALL
3/32" = 1'-0"

KEY NOTES

100	LINE OF ROOF OVERHANG ABOVE

KEYPLAN

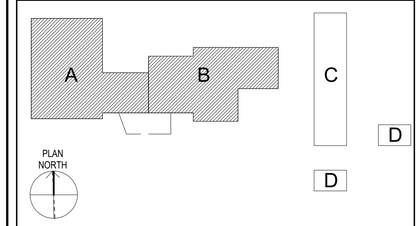

SCALES

3/32" = 1'-0"
16' 8' 0' 8' 16' 24'

Texas Department of Transportation

COPYRIGHT © 2021

Jacobs
1999 Bryan Street, Suite 1200
Dallas, Tx 75201
JACOBS ENGINEERING GROUP, INC
TEXAS REGISTRATION #2966

REGISTERED ARCHITECT
STEVEN JOHN TREMMEL
STATE OF TEXAS
04/21/2021

DALLAS DISTRICT (18)
COLLIN COUNTY
McKinney Area Engineering and Maintenance Facility
2205 TX-5, McKinney, TX 75069
PROJECT NO. 18-470420012

ISSUED: 2021.04.21
DRAWN BY: I. Eloualid
REVISIONS:

FLOOR PLAN OVERALL
A2.1

THIS DRAWING CREATED FOR PRODUCTION ON 22"x34" SHEET SIZE. DO NOT SCALE PRINTS.

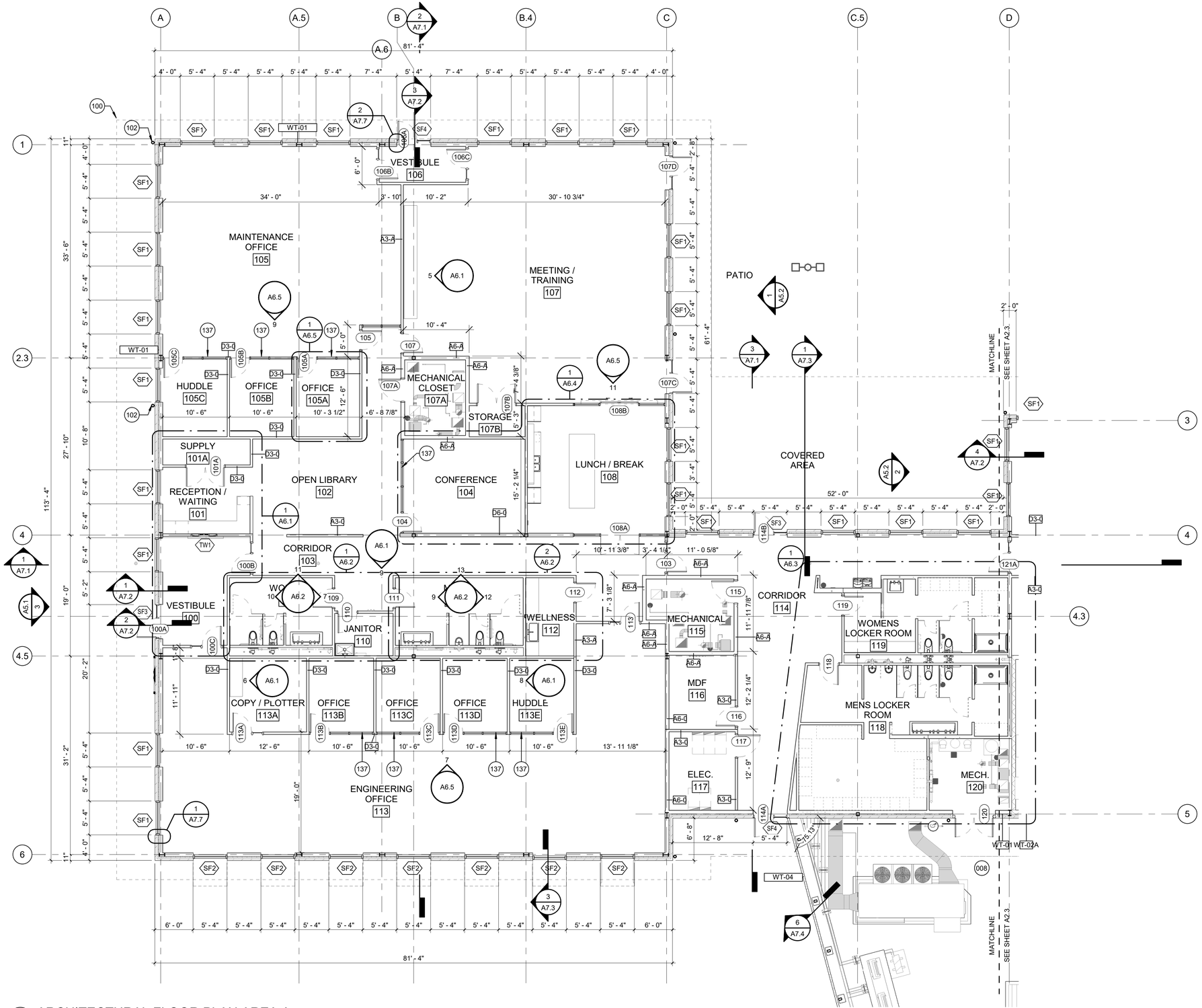

1 ARCHITECTURAL FLOOR PLAN AREA A
1/8" = 1'-0"

KEYPLAN

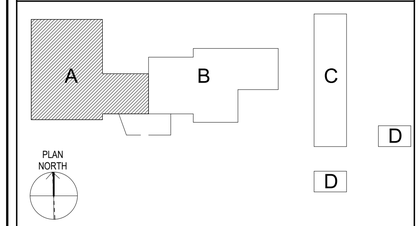

SCALES

1/8" = 1'-0"

8' 6' 4' 2' 0' 4' 8' 16'

KEY NOTES

008	MECHANICAL YARD
100	LINE OF ROOF OVERHANG ABOVE
102	PREFINISHED METAL DOWNSPOUT
137	LIGHT-GAUGE HEADER ABOVE WINDOW WALL, SUBMIT DESIGN FOR APPROVAL

FLOOR PLAN NOTES

1. DIMENSIONS GIVEN ARE TO FINISH FACE OF WALL, UNLESS INDICATED OTHERWISE.
2. ALL WALLS ARE TYPE A3.0, UNLESS INDICATED OTHERWISE. REFER TO SHEET A8.2 FOR PARTITION TYPE DETAILS.
3. FOR GYPSUM BOARD EXTERIOR CORNERS, PROVIDE:
   - STANDARD PROFILE CORNER BEADS FOR CORNERS NOT RECEIVING MILLWORK WRAP
   - 3/8" RADIUS BULLNOSE CORNER BEADS WHERE NOTED AS "RND."
4. FOR DOORS & WINDOWS, VERIFY:
   - 6-IN. OFFSET FROM ADJACENT WALL FOR TRIM CLEARANCE
   - QUANTITIES, SIZES & FEATURES BEFORE ORDERING
   - ROUGH-OPENING SIZES BEFORE FRAMING.
5. FOR RESTROOMS:
   - PROVIDE ACOUSTICAL-RATED ASSEMBLIES FOR WALLS & CEILINGS.
   - REFER TO SHEETS G1.2-3 FOR REQUIRED BLOCKING LOCATIONS AT GRAB BARS & TOILET PAPER DISPENSER.
6. COORDINATE SITE FLATWORK, SIDEWALKS, PORCHES, RAMPS ETC. TO MEET CURRENT VERSION OF TEXAS ACCESSIBILITY STANDARDS & OTHER CODE REQUIREMENTS.
7. COORDINATE ALL TRADES TO ENSURE COMPLETE & WORKING INSTALLATIONS.
8. NOTIFY ARCHITECT OF ANY DISCREPANCIES.

Texas Department of Transportation

COPYRIGHT © 2021

Jacobs
1999 Bryan Street, Suite 1200
Dallas, Tx 75201
JACOBS ENGINEERING GROUP, INC
TEXAS REGISTRATION #2966

REGISTERED ARCHITECT STEVEN JOHN TREMME 9414 STATE OF TEXAS
04/21/2021

DALLAS DISTRICT (18)
COLLIN COUNTY
McKinney Area Engineering and Maintenance Facility
2205 TX-5, McKinney, TX 75069
PROJECT NO. 18-470420012

ISSUED: 2021.04.21
DRAWN BY: I. Eloualid
REVISIONS:

FLOOR PLAN AREA A

A2.2

THIS DRAWING CREATED FOR PRODUCTION ON 22"x34" SHEET SIZE. DO NOT SCALE PRINTS.

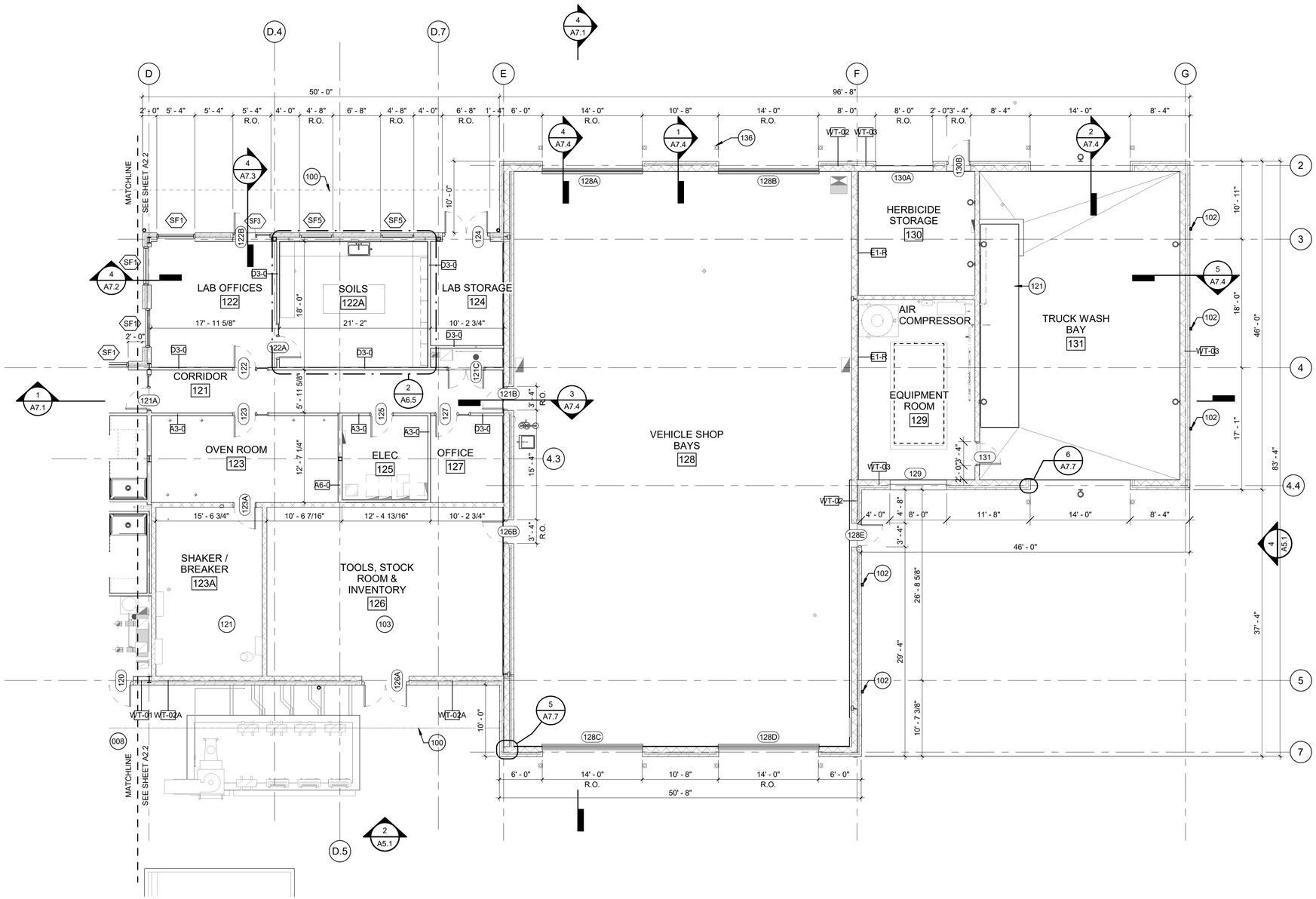

1 ARCHITECTURAL FLOOR PLAN AREA B

1/8" = 1'-0"

KEYPLAN

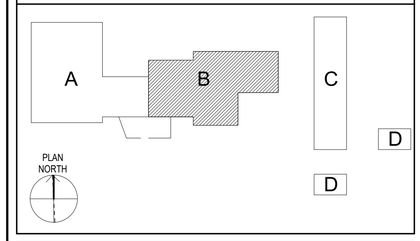

SCALES

1/8" = 1'-0"

8' 6' 4' 2' 0' 4' 8' 16'

KEY NOTES

008	MECHANICAL YARD
100	LINE OF ROOF OVERHANG ABOVE
102	PREFINISHED METAL DOWNSPOUT
103	STORM SHELTER LOCATION - CONCRETE LID THIS AREA, REFER TO STRUCTURAL
121	GRATING FOR WASH PIT, REFER TO STRUCTURE
136	BOLLARD, REFER TO 9/A7.5

FLOOR PLAN NOTES

1. DIMENSIONS GIVEN ARE TO FINISH FACE OF WALL, UNLESS INDICATED OTHERWISE.
2. ALL WALLS ARE TYPE A3.0, UNLESS INDICATED OTHERWISE. REFER TO SHEET A8.2 FOR PARTITION TYPE DETAILS.
3. FOR GYPSUM BOARD EXTERIOR CORNERS, PROVIDE:
   - STANDARD PROFILE CORNER BEADS FOR CORNERS NOT RECEIVING MILLWORK WRAP
   - 3/8" RADIUS BULLNOSE CORNER BEADS WHERE NOTED AS "RND."
4. FOR DOORS & WINDOWS, VERIFY:
   - 6-IN. OFFSET FROM ADJACENT WALL FOR TRIM CLEARANCE
   - QUANTITIES, SIZES & FEATURES BEFORE ORDERING
   - ROUGH-OPENING SIZES BEFORE FRAMING.
5. FOR RESTROOMS:
   - PROVIDE ACOUSTICAL-RATED ASSEMBLIES FOR WALLS & CEILINGS.
   - REFER TO SHEETS G1.2-3 FOR REQUIRED BLOCKING LOCATIONS AT GRAB BARS & TOILET PAPER DISPENSER.
6. COORDINATE SITE FLATWORK, SIDEWALKS, PORCHES, RAMPS ETC. TO MEET CURRENT VERSION OF TEXAS ACCESSIBILITY STANDARDS & OTHER CODE REQUIREMENTS.
7. COORDINATE ALL TRADES TO ENSURE COMPLETE & WORKING INSTALLATIONS.
8. NOTIFY ARCHITECT OF ANY DISCREPANCIES.

Texas Department of Transportation
COPYRIGHT © 2021

Jacobs
1999 Bryan Street, Suite 1200
Dallas, Tx 75201
JACOBS ENGINEERING GROUP, INC
TEXAS REGISTRATION #2966
REGISTERED ARCHITECT STEVEN JOHN THERMAN STATE OF TEXAS
04/21/2021

DALLAS DISTRICT (18)
COLLIN COUNTY
McKinney Area Engineering and Maintenance Facility
2205 TX-5, McKinney, TX 75069
PROJECT NO. 18-470420012

ISSUED: 2021.04.21
DRAWN BY: I. Eloualid
REVISIONS:

FLOOR PLAN AREA B

A2.3

THIS DRAWING CREATED FOR PRODUCTION ON 22"x34" SHEET SIZE. DO NOT SCALE PRINTS.

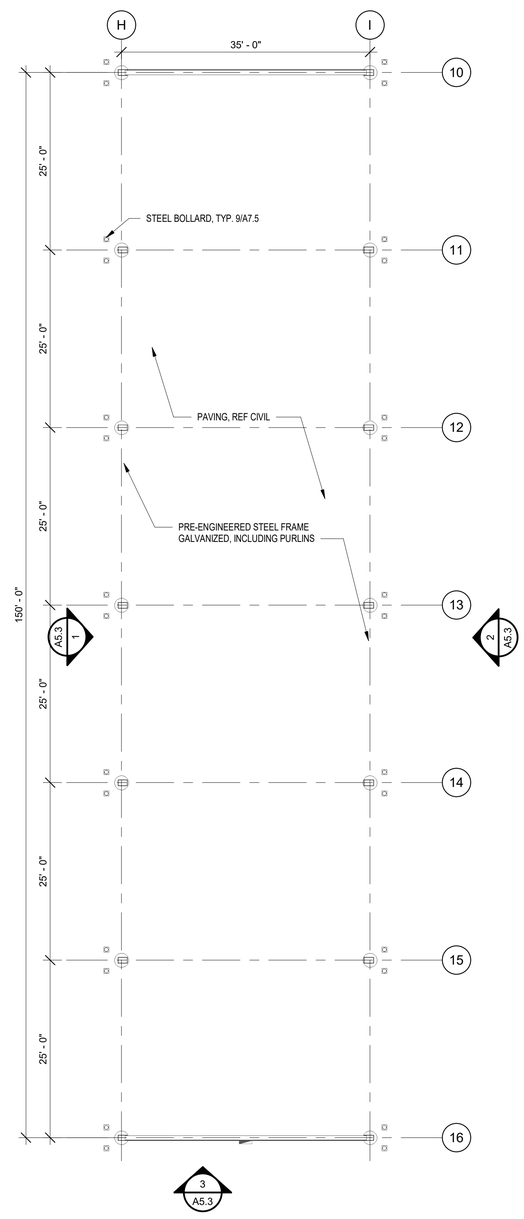

1 ARCHITECTURAL FLOOR PLAN - AREA C
3/32" = 1'-0"

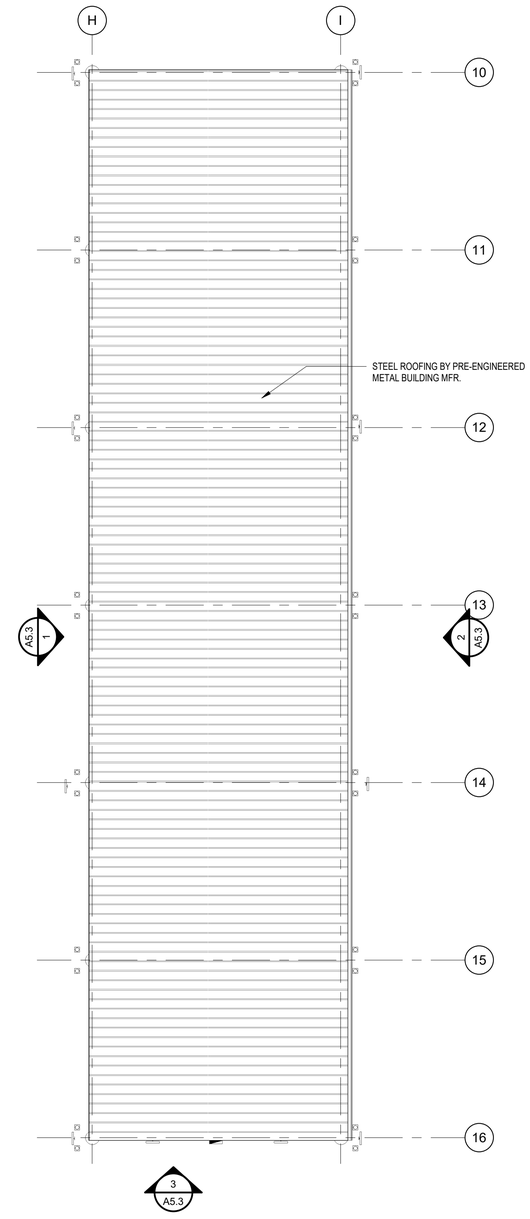

2 ROOF PLAN - AREA C
3/32" = 1'-0"

KEYPLAN

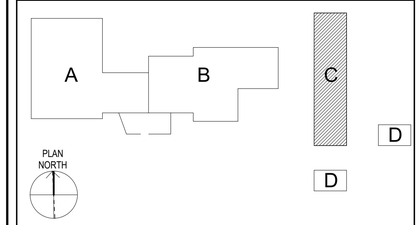

SCALES

Texas Department of Transportation

COPYRIGHT © 2021

Jacobs

1999 Bryan Street, Suite 1200
Dallas, Tx 75201

JACOBS ENGINEERING
GROUP, INC
TEXAS REGISTRATION #2966

04/21/2021

DALLAS DISTRICT (18)
COLLIN COUNTY
McKinney Area Engineering and Maintenance Facility
2205 TX-5, McKinney, TX 75069
PROJECT NO. 18-470420012

ISSUED: 2021.04.21
DRAWN BY: I. Eloualid
REVISIONS:

FLOOR PLAN
AREA C

A2.4

THIS DRAWING CREATED
FOR PRODUCTION ON
22"x34" SHEET SIZE.
DO NOT SCALE PRINTS.

KEY NOTES

102	PREFINISHED METAL DOWNSPOUT
106	THRU-WALL SCUPPER, PREFINISHED METAL CONDUCTOR HEAD AND DOWNSPOUT
107	ROOF VALLEY LINE
108	ROOF RIDGE LINE
109	CONTINUOUS METAL GUTTER
111	ROOF CRICKET
120	BUILDING OUTLINE BEYOND

KEYPLAN

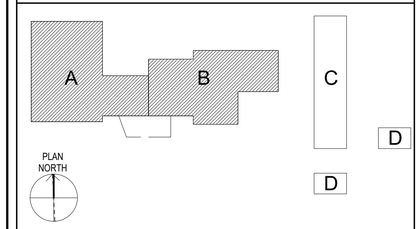

SCALES

3/32" = 1'-0"

16' 8' 0' 8' 16' 24'

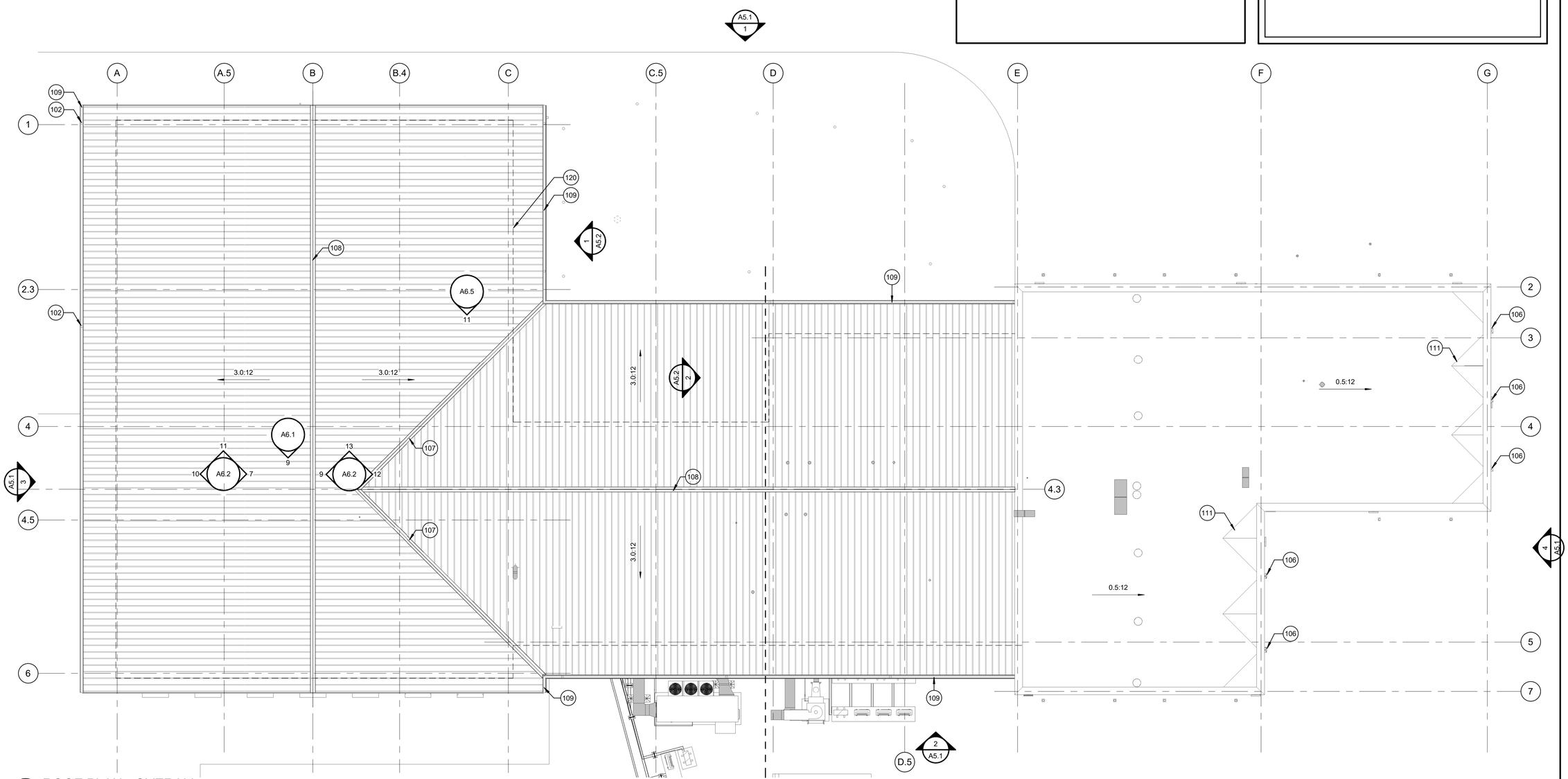

1 ROOF PLAN - OVERALL

3/32" = 1'-0"

Texas Department of Transportation

COPYRIGHT © 2021

Jacobs
1999 Bryan Street, Suite 1200
Dallas, Tx 75201

JACOBS ENGINEERING GROUP, INC
TEXAS REGISTRATION #2966

REGISTERED ARCHITECT STEVEN JOHN THOMAS STATE OF TEXAS

04/21/2021

DALLAS DISTRICT (18)
COLLIN COUNTY

McKinney Area Engineering and Maintenance Facility

2205 TX-5, McKinney, TX 75069

PROJECT NO. 18-47042001 2

ISSUED: 2021.04.21

DRAWN BY: I. Eloualid

REVISIONS:

ROOF PLAN

A3.1

THIS DRAWING CREATED FOR PRODUCTION ON 22"x34" SHEET SIZE. DO NOT SCALE PRINTS.

CEILING PLAN NOTES

1. CEILING HEIGHTS GIVEN ARE TO FACE OF FINISH. CEILINGS ARE 10'-0" AFF, UNLESS OTHERWISE INDICATED.
2. VERIFY AND COORDINATE PLACEMENT OF LIGHTING W/ OTHER TRADES (STRUCTURAL, HVAC, FIRE SPRINKLERS, ETC.). CONSULT MANUFACTURER IF ALTERNATE HOUSINGS ARE REQ'D.
4. REFER TO SPECIFICATIONS FOR ADDITIONAL INFORMATION.

CEILING PLAN LEGEND

- 2'x4' TROFFER (ORIENTATION)
- 2'x2' TROFFER (ORIENTATION)
- 2'x4' SURFACE MOUNT
- PENDANT
- RECESSED CAN
- RECESSED WALL WASHER
- WALL SCONCE
- EXIT SIGN
- SUPPLY AIR DIFFUSER
- RETURN AIR GRILL
- EXHAUST FAN
- LAY-IN ACOUSTICAL CEILING
- 5/8" GYP. BOARD CEILING

KEYPLAN

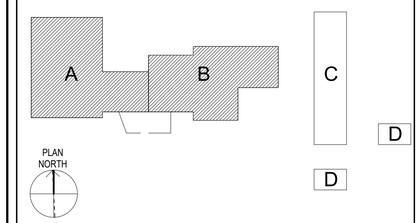

SCALES

3/32" = 1'-0"

16' 8' 0' 8' 16' 24'

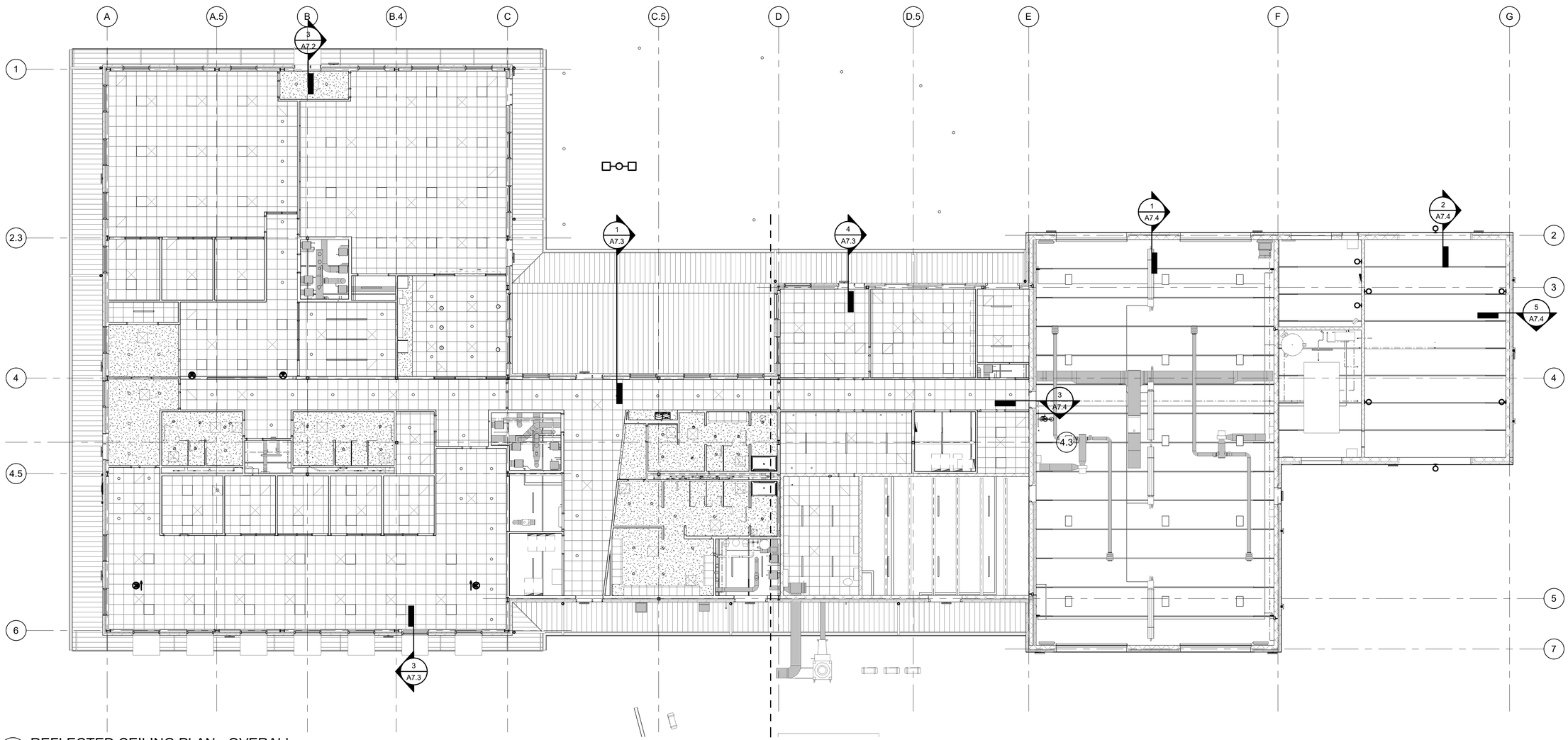

1 REFLECTED CEILING PLAN - OVERALL

3/32" = 1'-0"

Texas Department of Transportation

COPYRIGHT © 2021

Jacobs

1999 Bryan Street, Suite 1200
Dallas, Tx 75201

JACOBS ENGINEERING GROUP, INC
TEXAS REGISTRATION #2966

REGISTERED ARCHITECT STEVEN JOHN TREMME 04/14 STATE OF TEXAS

04/21/2021

DALLAS DISTRICT (18)
COLLIN COUNTY
McKinney Area Engineering and Maintenance Facility
2205 TX-5, McKinney, TX 75069

PROJECT NO. 18-470420012

ISSUED: 2021.04.21

DRAWN BY: I. Eloualid

REVISIONS:

REFLECTED CEILING PLAN OVERALL

A4.1

THIS DRAWING CREATED FOR PRODUCTION ON 22"x34" SHEET SIZE. DO NOT SCALE PRINTS.

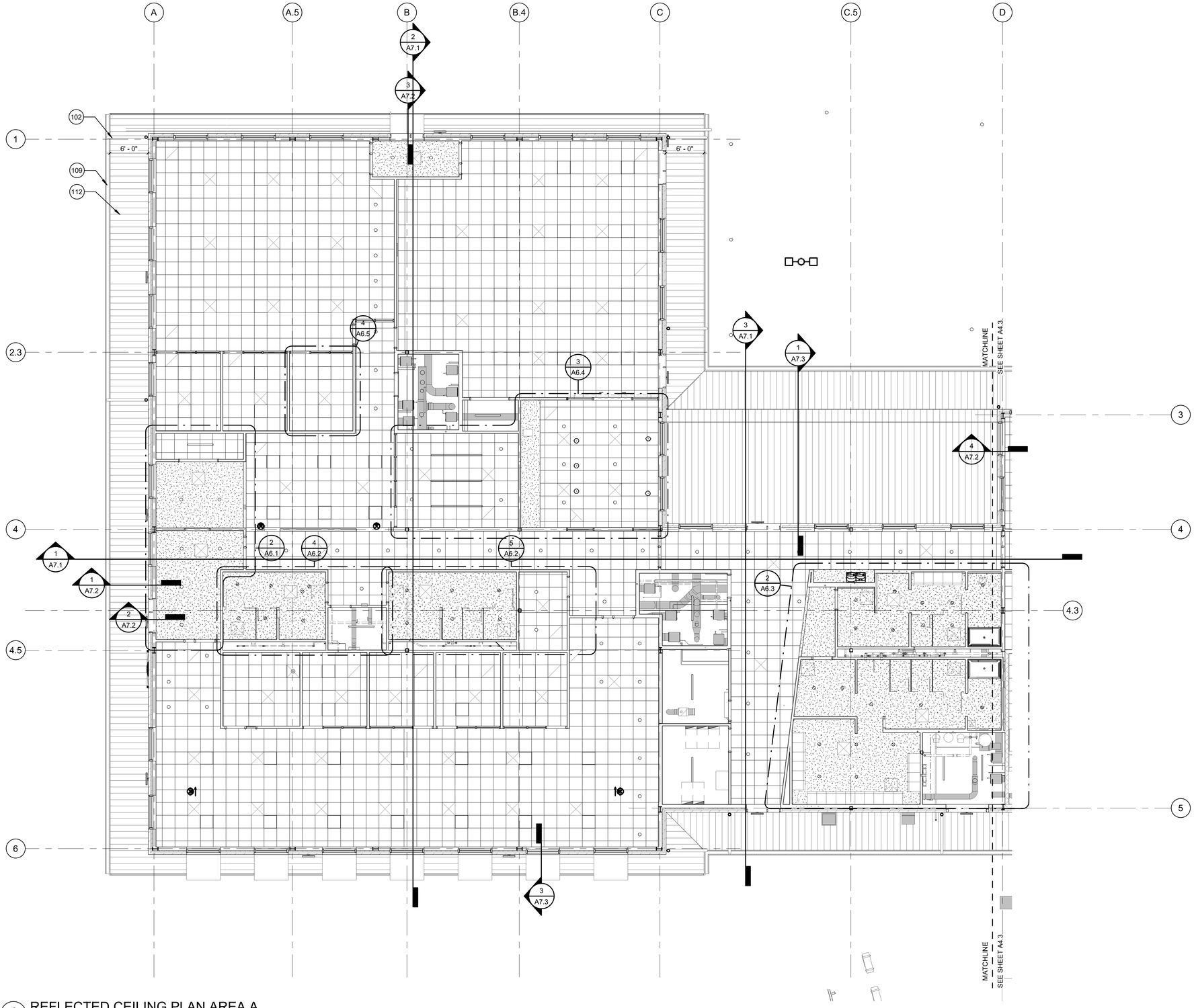

1 REFLECTED CEILING PLAN AREA A

1/8" = 1'-0"

KEYPLAN

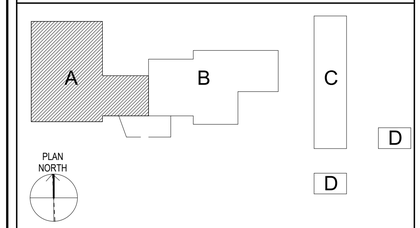

SCALES

1/8" = 1'-0"

8' 6' 4' 2' 0' 4' 8' 16'

KEY NOTES

102	PREFINISHED METAL DOWNSPOUT
109	CONTINUOUS METAL GUTTER
112	METAL PANEL SOFFIT ST-01

CEILING PLAN LEGEND

- 2'x4' TROFFER (ORIENTATION)
- 2'x2' TROFFER (ORIENTATION)
- 2'x4' SURFACE MOUNT
- PENDANT
- RECESSED CAN
- RECESSED WALL WASHER
- WALL SCONCE
- EXIT SIGN
- SUPPLY AIR DIFFUSER
- RETURN AIR GRILL
- EXHAUST FAN
- LAY-IN ACOUSTICAL CEILING
- 5/8" GYP. BOARD CEILING

CEILING PLAN NOTES

1. CEILING HEIGHTS GIVEN ARE TO FACE OF FINISH. CEILINGS ARE 10'-0" AFF, UNLESS OTHERWISE INDICATED.
2. VERIFY AND COORDINATE PLACEMENT OF LIGHTING W/ OTHER TRADES (STRUCTURAL, HVAC, FIRE SPRINKLERS, ETC.). CONSULT MANUFACTURER IF ALTERNATE HOUSINGS ARE REQ'D.
4. REFER TO SPECIFICATIONS FOR ADDITIONAL INFORMATION.

Texas Department of Transportation

COPYRIGHT © 2021

Jacobs
1999 Bryan Street, Suite 1200
Dallas, Tx 75201

JACOBS ENGINEERING GROUP, INC
TEXAS REGISTRATION #2966

REGISTERED ARCHITECT STEVEN JOHN THERMER STATE OF TEXAS

04/21/2021

DALLAS DISTRICT (18)
COLLIN COUNTY
McKinney Area Engineering and Maintenance Facility
2205 TX-5, McKinney, TX 75069

PROJECT NO. 18-470420012

ISSUED: 2021.04.21

DRAWN BY: I. Eloualid

REVISIONS:

REFLECTED CEILING PLAN AREA A

A4.2

THIS DRAWING CREATED FOR PRODUCTION ON 22"x34" SHEET SIZE. DO NOT SCALE PRINTS.

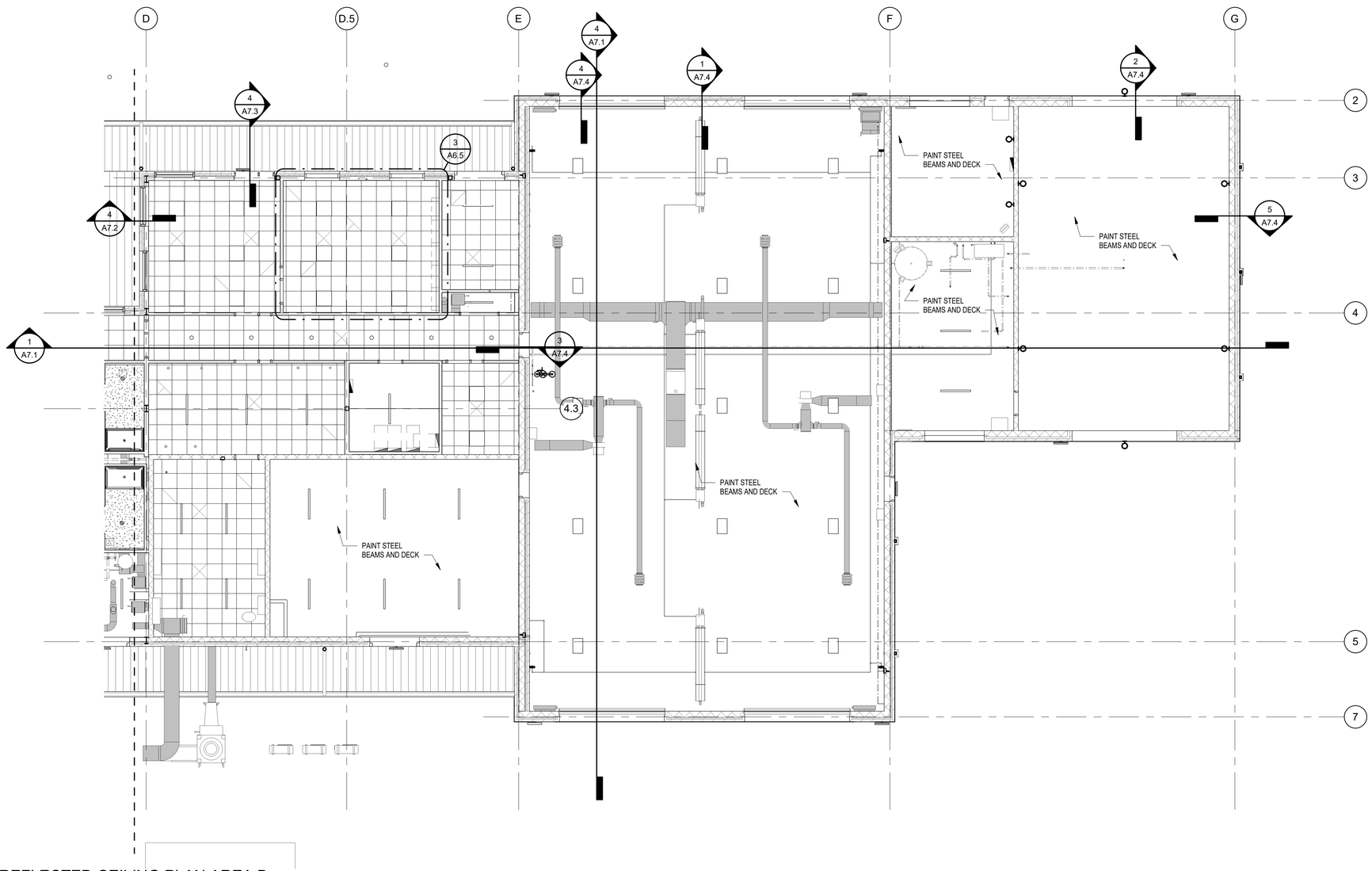

1 REFLECTED CEILING PLAN AREA B

1/8" = 1'-0"

KEYPLAN

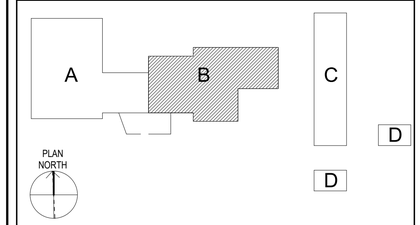

SCALES

1/8" = 1'-0"

8' 6' 4' 2' 0' 4' 8' 16'

KEY NOTES

CEILING PLAN LEGEND

- 2'x4' TROFFER (ORIENTATION)
- 2'x2' TROFFER (ORIENTATION)
- 2'x4' SURFACE MOUNT
- PENDANT
- RECESSED CAN
- RECESSED WALL WASHER
- WALL SCONCE
- EXIT SIGN
- SUPPLY AIR DIFFUSER
- RETURN AIR GRILL
- EXHAUST FAN
- LAY-IN ACOUSTICAL CEILING
- 5/8" GYP. BOARD CEILING

CEILING PLAN NOTES

1. CEILING HEIGHTS GIVEN ARE TO FACE OF FINISH. CEILINGS ARE 10'-0" AFF, UNLESS OTHERWISE INDICATED.
2. VERIFY AND COORDINATE PLACEMENT OF LIGHTING W/ OTHER TRADES (STRUCTURAL, HVAC, FIRE SPRINKLERS, ETC.). CONSULT MANUFACTURER IF ALTERNATE HOUSINGS ARE REQ'D.
4. REFER TO SPECIFICATIONS FOR ADDITIONAL INFORMATION.

Texas Department of Transportation
COPYRIGHT © 2021

Jacobs
1999 Bryan Street, Suite 1200
Dallas, Tx 75201
JACOBS ENGINEERING GROUP, INC
TEXAS REGISTRATION #2966

REGISTERED ARCHITECT STEVEN JOHN THERMER 18518 STATE OF TEXAS
04/21/2021

DALLAS DISTRICT (18)
COLLIN COUNTY
McKinney Area Engineering and Maintenance Facility
2205 TX-5, McKinney, TX 75069
PROJECT NO. 18-470420012

ISSUED: 2021.04.21
DRAWN BY: I. Eloualid
REVISIONS:

REFLECTED CEILING PLAN AREA B

A4.3

THIS DRAWING CREATED FOR PRODUCTION ON 22"x34" SHEET SIZE. DO NOT SCALE PRINTS.

EXTERIOR ELEVATION NOTES

1. DIMENSIONS GIVEN ARE TO FACE OF FINISH MATERIAL, UNLESS INDICATED OTHERWISE.
2. SEE SHEETS A8.1 FOR EXTERIOR ASSEMBLIES
3. SEE SHEETS A8.1 FOR WINDOW & LOUVER TYPES
4. SEE SHEETS A8.3 FOR DOOR SCHEDULE.
5. PRIOR TO ORDERING, VERIFY DOOR & WINDOW QUANTITIES
6. PRIOR TO FRAMING, VERIFY ROUGH-OPENING SIZES

KEY NOTES

102	PREFINISHED METAL DOWNSPOUT
106	THRU-WALL SCUPPER, PREFINISHED METAL CONDUCTOR HEAD AND DOWNSPOUT
108	ROOF RIDGE LINE
109	CONTINUOUS METAL GUTTER
110	OVERFLOW SCUPPER
122	LINE OF ROOF BEYOND
125	LOUVER, REFER TO MECHANICAL
126	GENERATOR, REFER TO ELECTRICAL
127	ALUMINUM SUNSHADE
131	SECTIONAL DOOR, REFER TO A8.3
134	DOWNSPOUT GUARD
140	6'-0" DIAMETER STAR, TO BE CONSTRUCTED WITH A 2" OVERALL THICKNESS AND THE CENTER TO HAVE AN ADDITIONAL 3" PROJECTION . MATERIAL TO BE ALUMINUM, PRE-FINISHED TO MATCH STOREFRONT
141	IRRIGATION CISTERN AND CONNECTION TO GUTTER
142	PREFINISHED METAL DOWNSPOUT W/ SPLASHBLOCK

KEYPLAN

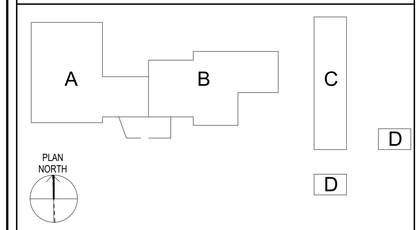

SCALES

3/32" = 1'-0"

16' 8' 0' 8' 16' 24'

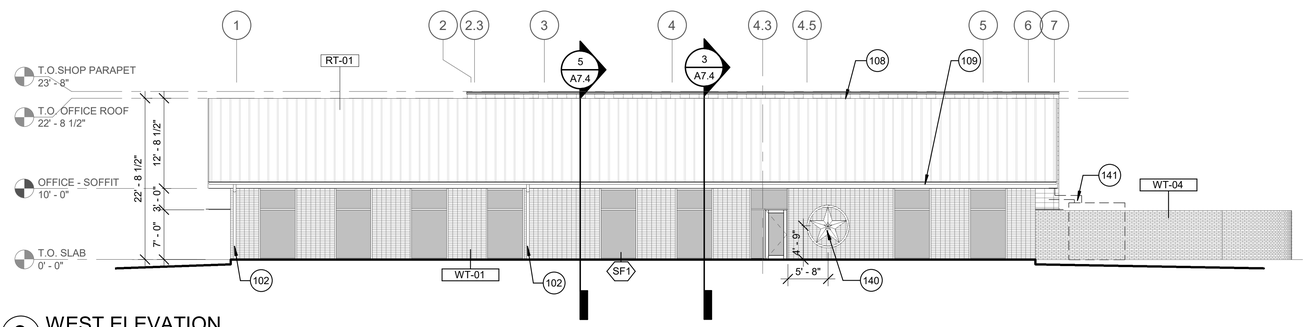

3 WEST ELEVATION
3/32" = 1'-0"

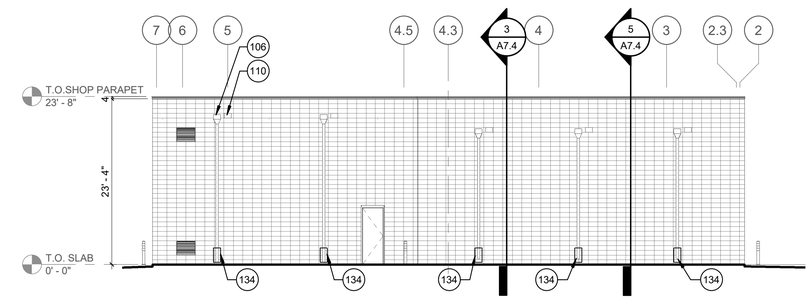

4 EAST ELEVATION
3/32" = 1'-0"

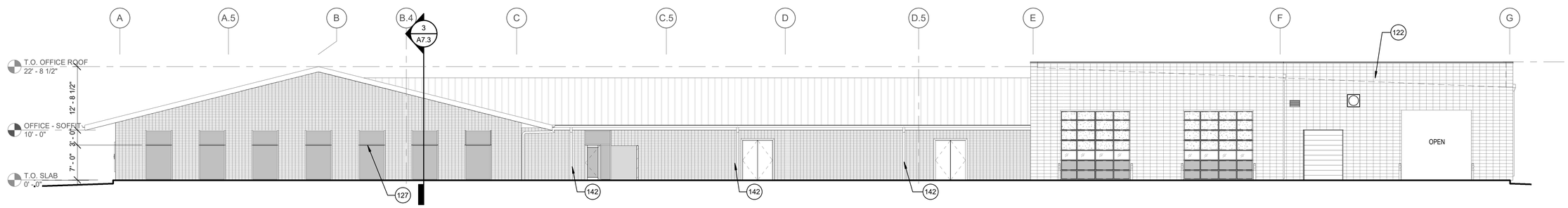

2 SOUTH ELEVATION
3/32" = 1'-0"

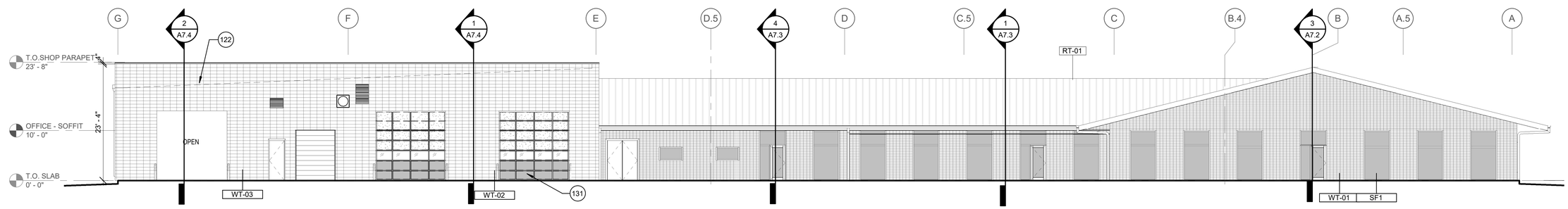

1 NORTH ELEVATION
3/32" = 1'-0"

Texas Department of Transportation
COPYRIGHT © 2021

Jacobs
1999 Bryan Street, Suite 1200
Dallas, Tx 75201
JACOBS ENGINEERING GROUP, INC
TEXAS REGISTRATION #2966
REGISTERED ARCHITECT STEVEN JOHN THERMER STATE OF TEXAS
04/21/2021

DALLAS DISTRICT (18)
COLLIN COUNTY
McKinney Area Engineering and Maintenance Facility
2205 TX-5, McKinney, TX 75069
PROJECT NO. 18-470420012

ISSUED: 2021.04.21
DRAWN BY: I. Eloualid
REVISIONS:

BUILDING ELEVATIONS

A5.1

THIS DRAWING CREATED FOR PRODUCTION ON 22"x34" SHEET SIZE. DO NOT SCALE PRINTS.

EXTERIOR ELEVATION NOTES

1. DIMENSIONS GIVEN ARE TO FACE OF FINISH MATERIAL, UNLESS INDICATED OTHERWISE.
2. SEE SHEETS A8.1 FOR EXTERIOR ASSEMBLIES
3. SEE SHEETS A8.1 FOR WINDOW & LOUVER TYPES
4. SEE SHEETS A8.3 FOR DOOR SCHEDULE.
5. PRIOR TO ORDERING, VERIFY DOOR & WINDOW QUANTITIES
6. PRIOR TO FRAMING, VERIFY ROUGH-OPENING SIZES

KEY NOTES

102	PREFINISHED METAL DOWNSPOUT
108	ROOF RIDGE LINE
109	CONTINUOUS METAL GUTTER
127	ALUMINUM SUNSHADE

KEYPLAN

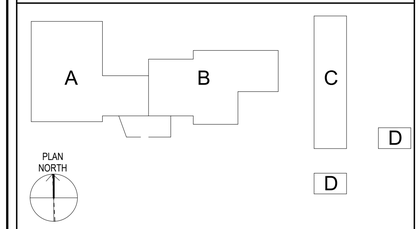

SCALES

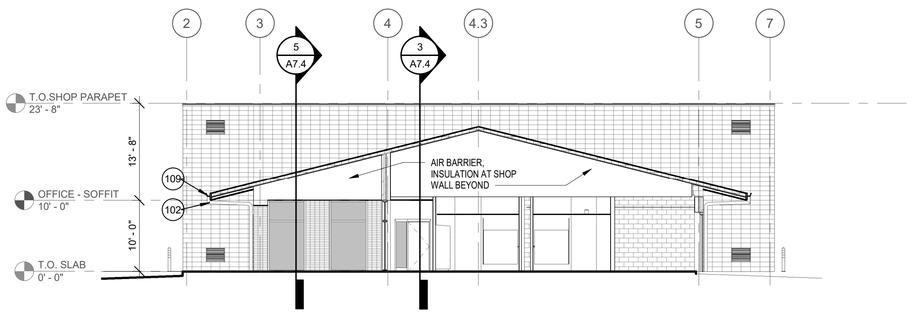

2 WEST ELEVATION - PATIO
3/32" = 1'-0"

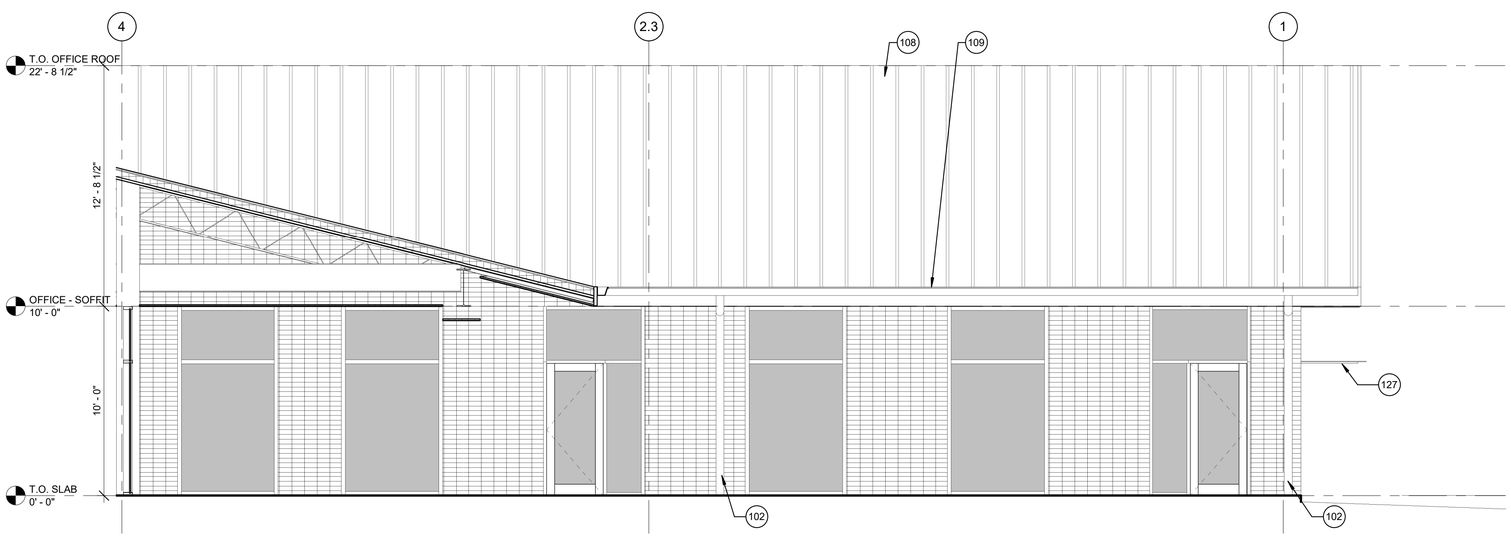

1 EAST ELEVATION - PATIO
1/4" = 1'-0"

Texas Department of Transportation

COPYRIGHT © 2021

Jacobs
1999 Bryan Street, Suite 1200
Dallas, Tx 75201

JACOBS ENGINEERING GROUP, INC
TEXAS REGISTRATION #2966

REGISTERED ARCHITECT STEVEN JOHN TREMMEL 19414 STATE OF TEXAS
04/21/2021

DALLAS DISTRICT (18)
COLLIN COUNTY
McKinney Area Engineering and Maintenance Facility
2205 TX-5, McKinney, TX 75069
PROJECT NO. 18-470420012

ISSUED: 2021.04.21
DRAWN BY: I. Eloualid
REVISIONS:

BUILDING ELEVATIONS (CONT.)

A5.2

THIS DRAWING CREATED FOR PRODUCTION ON 22"x34" SHEET SIZE. DO NOT SCALE PRINTS.

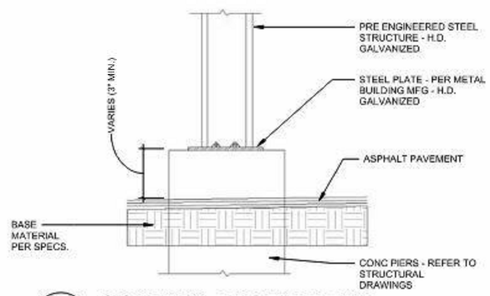

8 COLUMN BASE DETAIL
SCALE: 1/2" = 1'-0"

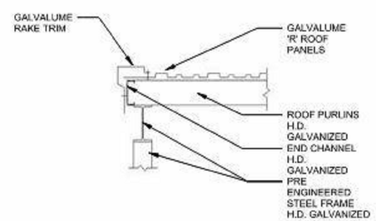

7 RAKE DETAIL
SCALE: 1/2" = 1'-0"

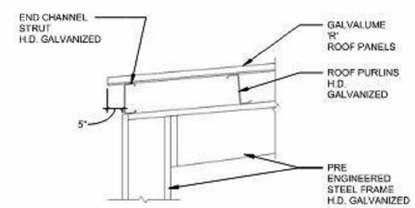

6 EAVE DETAIL - LOW
SCALE: 1/2" = 1'-0"

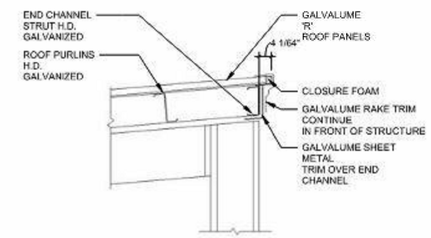

5 EAVE DETAIL - HIGH
SCALE: 1/2" = 1'-0"

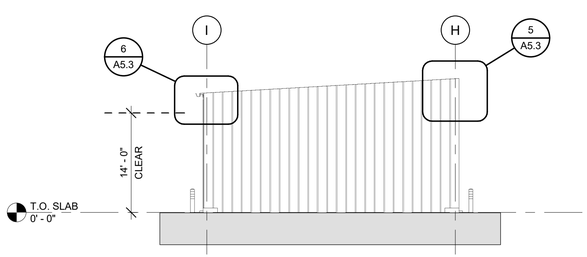

4 A5.3 NORTH ELEV - EQUIP. SHED
3/32" = 1'-0"

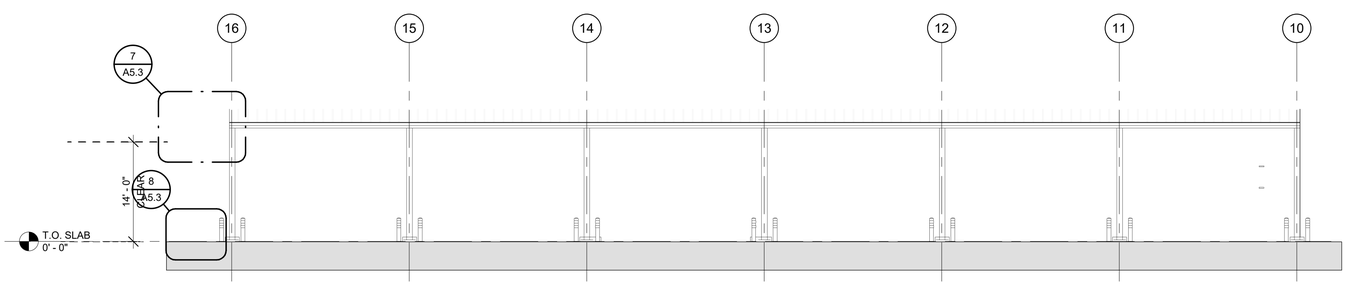

2 A5.3 EAST ELEV - EQUIP. SHED
3/32" = 1'-0"

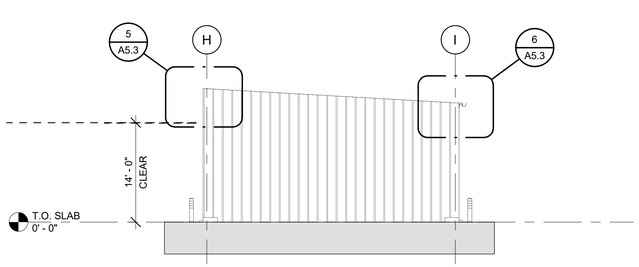

3 A5.3 SOUTH ELEV - EQUIP. SHED
3/32" = 1'-0"

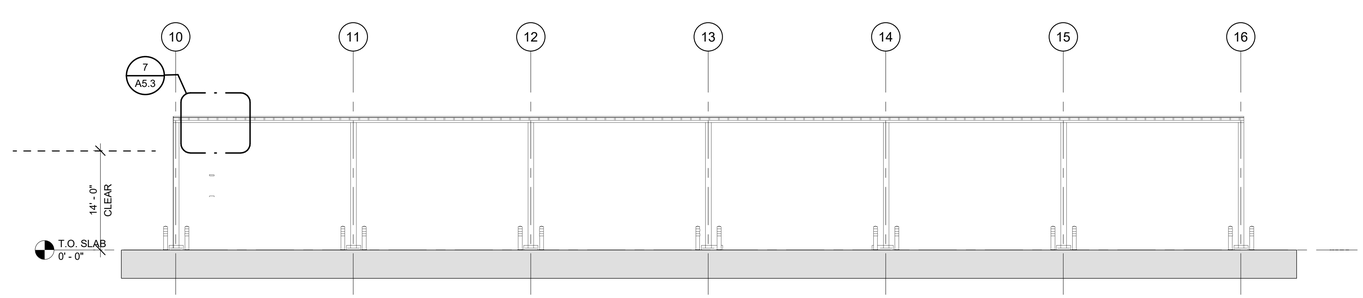

1 A5.3 WEST ELEV - EQUIP. SHED
3/32" = 1'-0"

Texas Department of Transportation

COPYRIGHT © 2021

Jacobs
1999 Bryan Street, Suite 1200
Dallas, Tx 75201
JACOBS ENGINEERING GROUP, INC
TEXAS REGISTRATION #2966

REGISTERED ARCHITECT STEVEN JOHN TREMME 9414 STATE OF TEXAS
04/21/2021

DALLAS DISTRICT (18)
COLLIN COUNTY
McKinney Area Engineering and Maintenance Facility
2205 TX-5, McKinney, TX 75069
PROJECT NO. 18-470420012

ISSUED: 2021.04.21
DRAWN BY: I. Eloualid
REVISIONS:

BUILDING ELEVATIONS (CONT.)

A5.3

THIS DRAWING CREATED FOR PRODUCTION ON 22"x34" SHEET SIZE. DO NOT SCALE PRINTS.

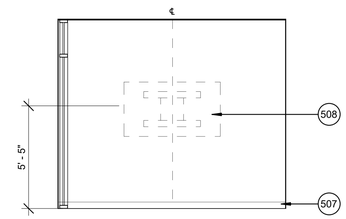

8 INTERIOR ELEVATION - HUDDLE TYPICAL
1/4" = 1'-0"

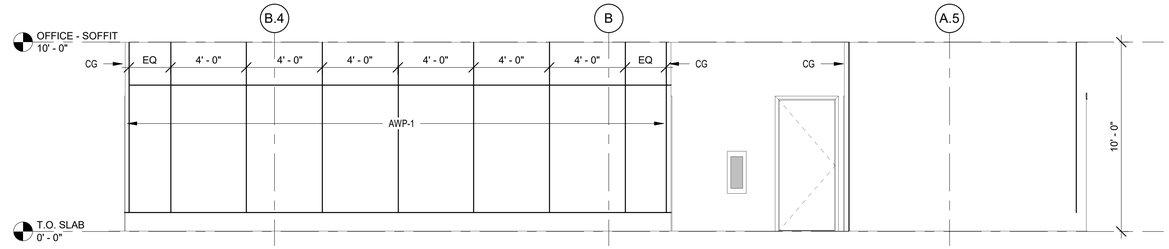

9 INTERIOR ELEVATION - CORRIDOR
1/4" = 1'-0"

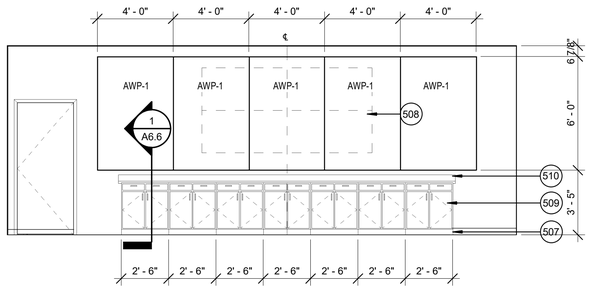

5 INTERIOR ELEVATION - MEETING / TRAINING
1/4" = 1'-0"

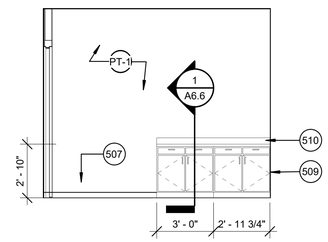

6 INTERIOR ELEVATION - COPY/PLOTTER
1/4" = 1'-0"

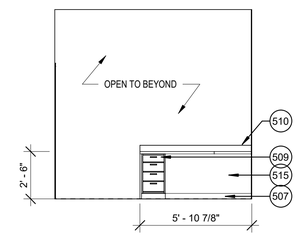

7 INTERIOR ELEVATION - RECEPTION
1/4" = 1'-0"

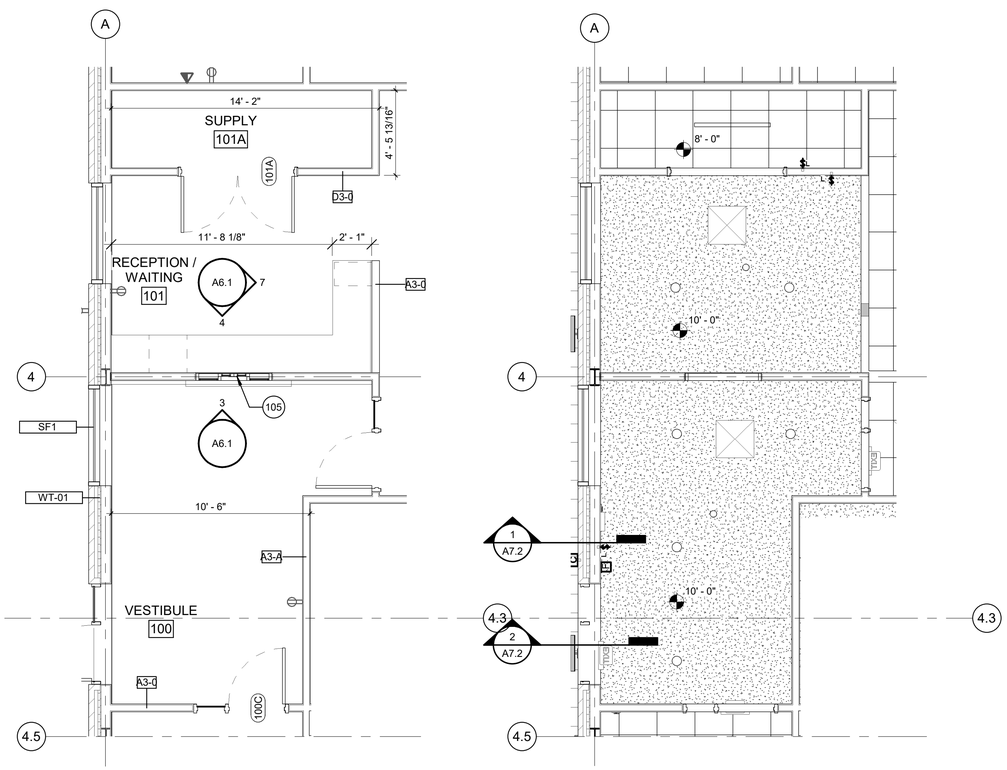

1 ENLARGED PLAN - RECEPTION
1/4" = 1'-0"

2 ENLARGED RCP - RECEPTION
1/4" = 1'-0"

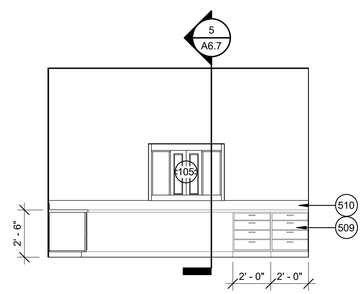

4 INTERIOR ELEVATION - RECEPTION
1/4" = 1'-0"

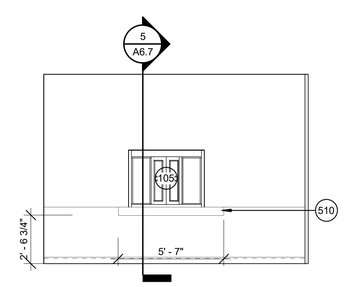

3 INTERIOR ELEVATION - VESTIBULE
1/4" = 1'-0"

SCALES

1/4" = 1'-0"
4' 3' 2' 1' 0" 2' 4' 8'

KEY NOTES

105	PASS-THRU TRANSACTION WINDOW
507	BASE AS SCHEDULED
508	TV MONITOR, COORDINATE W/ OWNER FOR SPECS. GC TO PROVIDE BLOCKING & POWER/DATA AS REQUIRED
509	PLASTIC LAMINATE ALL EXPOSED CABINET SURFACES - PL-1
510	SOLID SURFACE COUNTERTOP SS-1 WITH BACKSPLASH
515	WALL AS SCHEDULED
PT-1	PAINTED WALL COLOR

INTERIOR ELEVATION NOTES

1. INTERIOR ELEVATIONS ARE ILLUSTRATIVE & INTENDED TO CONVEY DESIGN INTENT. VERIFY FINISHES, PROFILES & HEIGHTS COMPLY WITH CURRENT VERSION OF TEXAS ACCESSIBILITY STANDARDS & OTHER JURISDICTION REQUIREMENTS.
2. MATERIALS DEPICTED ARE GENERIC (EXCEPT WHERE NOTED) AND INTENDED ONLY TO SHOW RELATIONSHIPS, LOCATIONS & HEIGHTS OF FINAL FINISHES. REFER TO FINISH SCHEDULES FOR SPECIFIED MATERIALS, STYLES, COLORS & PATTERNS.
3. NOTIFY ARCHITECT OF ANY DISCREPANCIES BEFORE ORDERING MATERIALS AND/OR PROCEEDING WITH INSTALLATIONS.

FINISH LEGEND

REFER TO A9.1 FOR ALL FINISH DESIGNATIONS

Texas Department of Transportation
COPYRIGHT © 2021

Jacobs
1999 Bryan Street, Suite 1200
Dallas, Tx 75201
JACOBS ENGINEERING GROUP, INC
TEXAS REGISTRATION #2966

REGISTERED ARCHITECT JOHN THOMAS MAYO III STATE OF TEXAS
04/21/2021

DALLAS DISTRICT (18)
COLLIN COUNTY
McKinney Area Engineering and Maintenance Facility
2205 TX-5, McKinney, TX 75069
PROJECT NO. 18-470420012

ISSUED: 2021.04.21
DRAWN BY: I. Eloualid
REVISIONS:

ENLARGED PLANS, RCPS, & ELEVATIONS

A6.1

THIS DRAWING CREATED FOR PRODUCTION ON 22"x34" SHEET SIZE. DO NOT SCALE PRINTS.

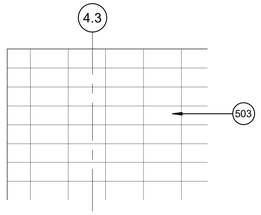

10 INTERIOR ELEVATION - WOMEN
1/4" = 1'-0"

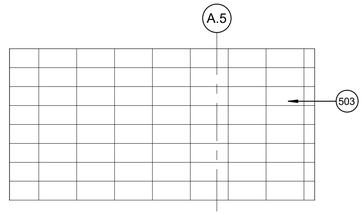

11 INTERIOR ELEVATION - WOMEN
1/4" = 1'-0"

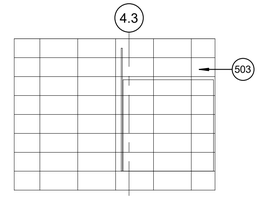

12 INTERIOR ELEVATION - MEN
1/4" = 1'-0"

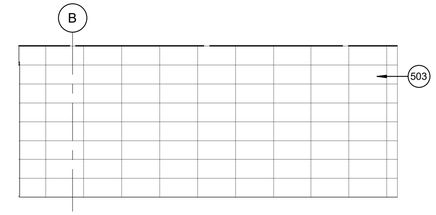

13 INTERIOR ELEVATION - MEN
1/4" = 1'-0"

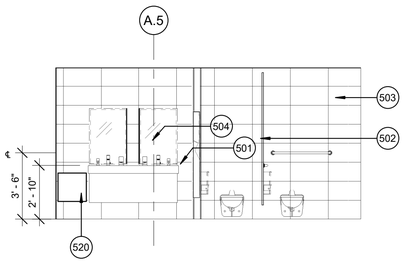

6 INTERIOR ELEVATION - WOMEN
1/4" = 1'-0"

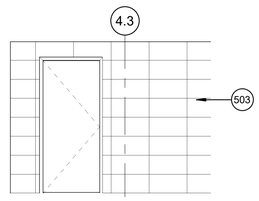

7 INTERIOR ELEVATION - WOMEN
1/4" = 1'-0"

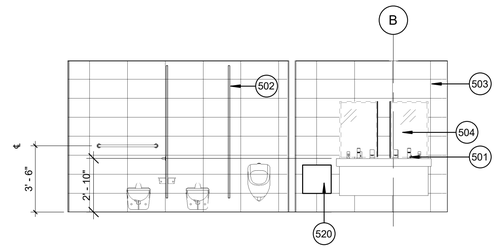

8 INTERIOR ELEVATION - MEN
1/4" = 1'-0"

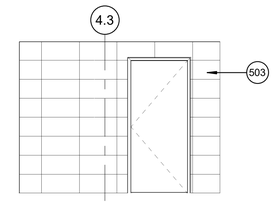

9 INTERIOR ELEVATION - MEN
1/4" = 1'-0"

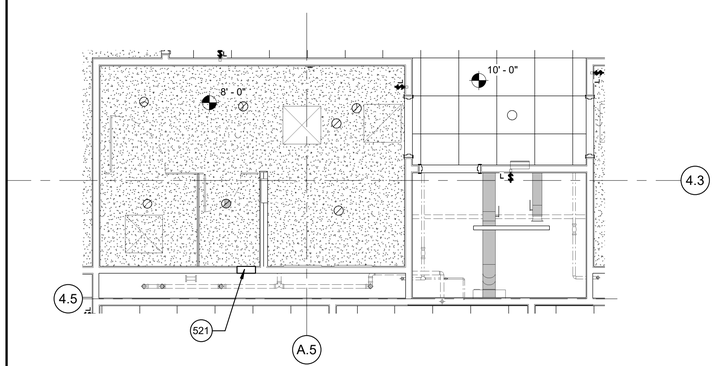

4 ENLARGED RCP - WOMEN
1/4" = 1'-0"

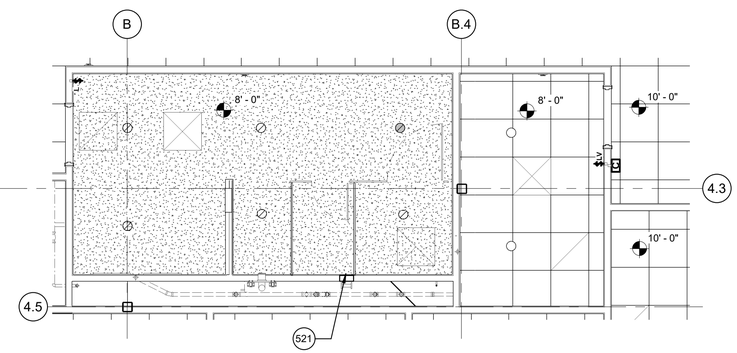

5 ENLARGED RCP - MEN
1/4" = 1'-0"

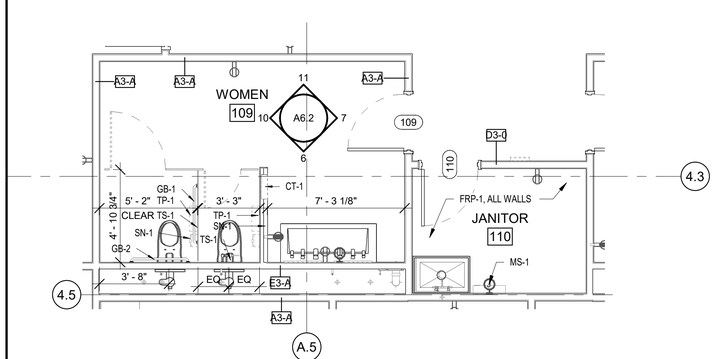

1 ENLARGED FLOOR PLAN - WOMEN
1/4" = 1'-0"

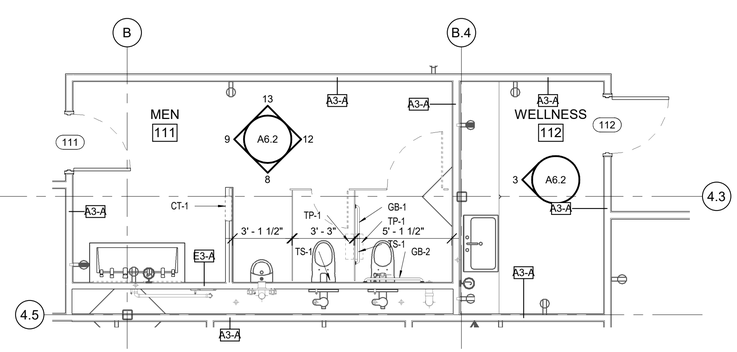

2 ENLARGED FLOOR PLAN - MEN
1/4" = 1'-0"

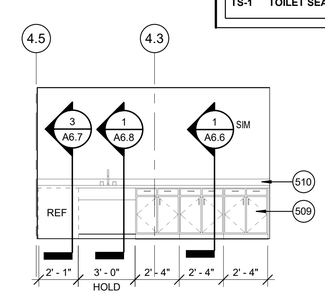

3 INTERIOR ELEVATION - WELLNESS
1/4" = 1'-0"

SCALES

1/4" = 1'-0"
4' 3' 2' 1' 0" 2' 4' 8'

KEY NOTES

501	SINK AND FAUCET AS SCHEDULED. REFER TO PLUMBING
502	TOILET COMPARTMENT TC-1
503	WALL TILE WT-1
504	WALL MOUNTED MIRROR. CENTER ABOVE LAVATORY. BOTTOM OF REFLECTING SURFACE 40" A.F.F MAX
509	PLASTIC LAMINATE ALL EXPOSED CABINET SURFACES - PL-1
510	SOLID SURFACE COUNTERTOP SS-1 WITH BACKSPLASH
520	18"X18"X5" RECESSED BOX FOR INSTANTANEOUS WATER HEATER.
521	8"X8" ACCESS PANEL FOR WATER HAMMER ARRESTOR.

INTERIOR ELEVATION NOTES

1. INTERIOR ELEVATIONS ARE ILLUSTRATIVE & INTENDED TO CONVEY DESIGN INTENT. VERIFY FINISHES, PROFILES & HEIGHTS COMPLY WITH CURRENT VERSION OF TEXAS ACCESSIBILITY STANDARDS & OTHER JURISDICTION REQUIREMENTS.
2. MATERIALS DEPICTED ARE GENERIC (EXCEPT WHERE NOTED) AND INTENDED ONLY TO SHOW RELATIONSHIPS, LOCATIONS & HEIGHTS OF FINAL FINISHES. REFER TO FINISH SCHEDULES FOR SPECIFIED MATERIALS, STYLES, COLORS & PATTERNS.
3. NOTIFY ARCHITECT OF ANY DISCREPANCIES BEFORE ORDERING MATERIALS AND/OR PROCEEDING WITH INSTALLATIONS.

FINISH LEGEND

REFER TO A9.1 FOR ALL FINISH DESIGNATIONS

TOILET ACCESSORIES

GB-1	**GRAB BAR - 42"**
GB-2	**GRAB BAR - 36"**
TP-1	**TOILET TISSUE (ROLL) DISPENSER**
SN-1	**SANITARY NAPKIN DISPOSAL**
CT-1	**RECESSED PAPER TOWEL DISPENSER/WASTE RECEPTACLE**
MS-1	**MOP SHELF**
SC-1	**SHOWER CURTAIN 70"W X 72" H**
DH-1	**DOUBLE HOOK**
TS-1	**TOILET SEAT COVER DISPENSER**

Texas Department of Transportation

COPYRIGHT © 2021

Jacobs
1999 Bryan Street, Suite 1200
Dallas, Tx 75201

JACOBS ENGINEERING GROUP, INC
TEXAS REGISTRATION #2966

REGISTERED ARCHITECT STEVEN JOHN THERMES 6516 STATE OF TEXAS
04/21/2021

DALLAS DISTRICT (18)
COLLIN COUNTY
McKinney Area Engineering and Maintenance Facility
2205 TX-5, McKinney, TX 75069
PROJECT NO. 18-470420012

ISSUED: 2021.04.21
DRAWN BY: I. Eloualid
REVISIONS:

ENLARGED PLANS, RCPS & ELEVATIONS

A6.2

THIS DRAWING CREATED FOR PRODUCTION ON 22"x34" SHEET SIZE. DO NOT SCALE PRINTS.

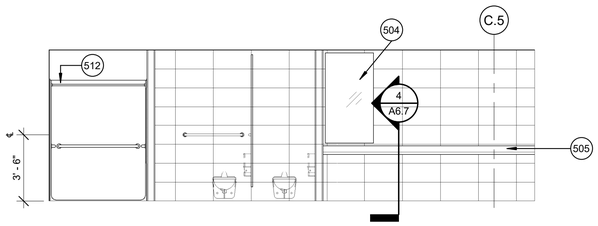

5 INTERIOR ELEVATION - WOMENS LOCKERS
1/4" = 1'-0"

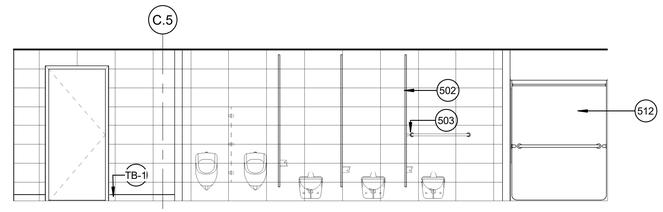

6 INTERIOR ELEVATION - MENS LOCKERS
1/4" = 1'-0"

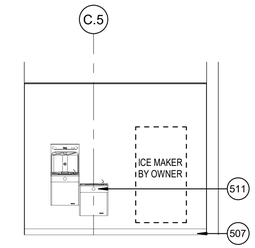

7 INTERIOR ELEVATION - EWC
1/4" = 1'-0"

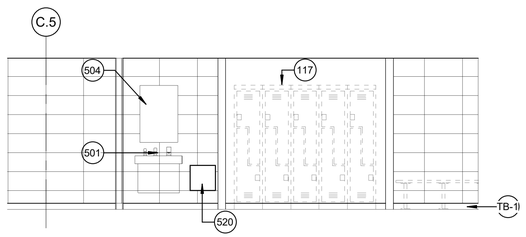

3 INTERIOR ELEVATION - WOMENS LOCKERS
1/4" = 1'-0"

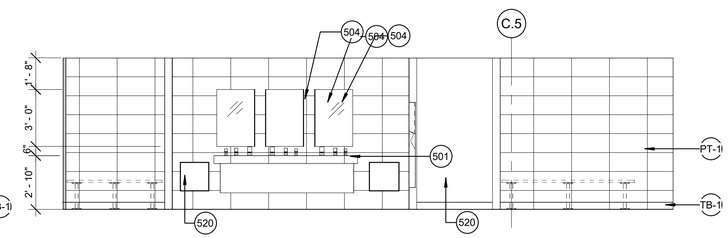

4 INTERIOR ELEVATION - MENS LOCKERS
1/4" = 1'-0"

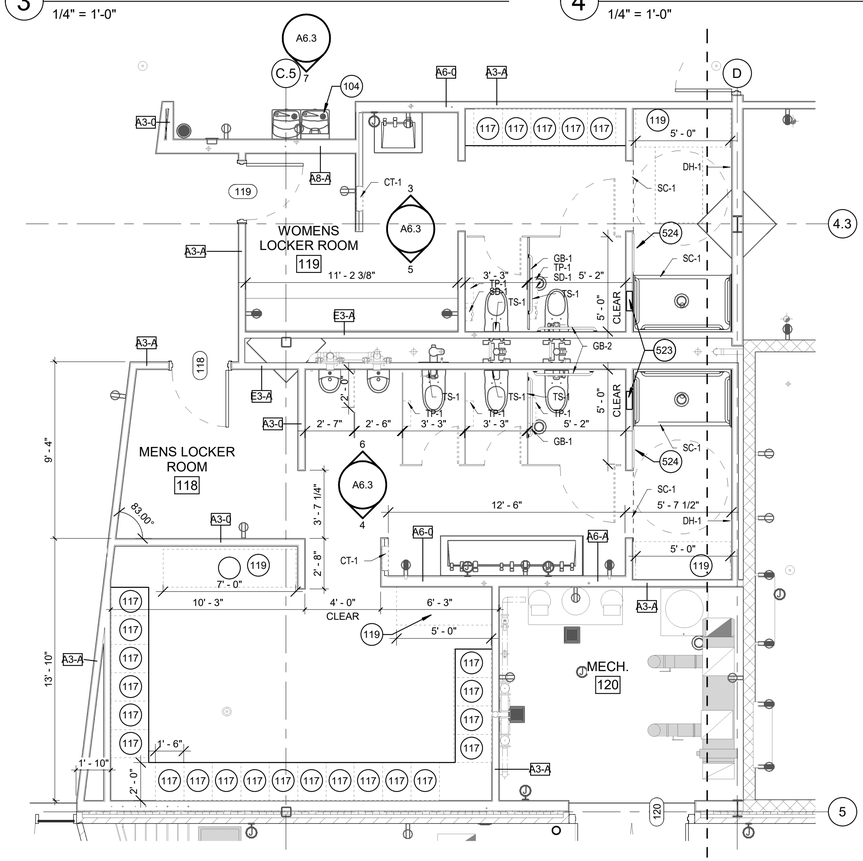

1 ENLARGED PLAN - LOCKERS
1/4" = 1'-0"

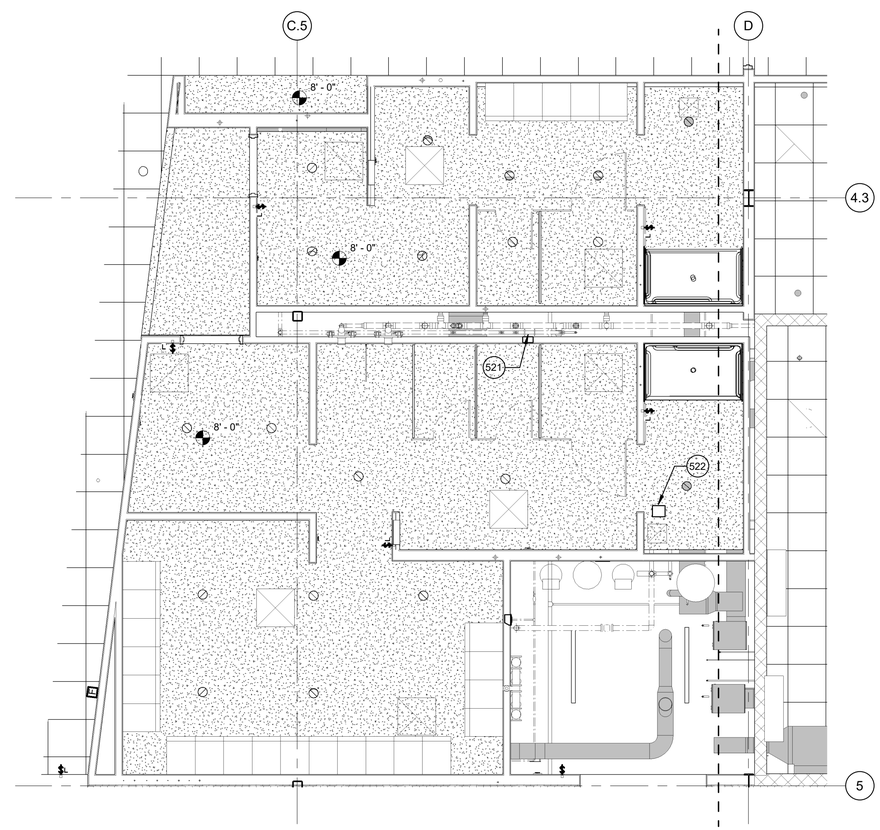

2 ENLARGED RCP - LOCKERS
1/4" = 1'-0"

SCALES

1/4" = 1'-0"

4' 3' 2' 1' 0" 2' 4' 8'

KEY NOTES

104	ELECTRIC WATER COOLER, HI-LOW WITH BOTTLE FILLER
117	DOUBLE TIER LOCKERS 18WX24DX72H" WITH SLOPED TOP ON 4" CONCRETE BASE. PROVIDE CLOSURE PANELS AT EACH WALL OR ADJACENT LOCKER. 5% TO BE ADA ACCESSIBLE
119	FIXED BENCH, ADA COMPLIANT. 2'-0" DEEP. LENGTH AS DIMENSIONED
501	SINK AND FAUCET AS SCHEDULED. REFER TO PLUMBING
502	TOILET COMPARTMENT TC-1
503	WALL TILE WT-1
504	WALL MOUNTED MIRROR. CENTER ABOVE LAVATORY. BOTTOM OF REFLECTING SURFACE 40" A.F.F MAX
505	SOLID SURFACE COUNTERTOP SS-1 WITH BACKSPLASH
507	BASE AS SCHEDULED
511	WATER FOUNTAIN AS SCHEDULED. REFER TO PLUMBING.
512	SHOWER AS SCHEDULED. REFER TO PLUMBING.
520	18"X18"X5" RECESSED BOX FOR INSTANTANEOUS WATER HEATER.
521	8"X8" ACCESS PANEL FOR WATER HAMMER ARRESTOR.
522	8"X8" ACCESS PANEL FOR SHUTOFF VALVE.
523	12"X12" ACCESS PANEL FOR SHOWERS.
524	24"X48" MIRROR 24"AFF IN SHOWER AREA
PT-1	PAINTED WALL COLOR
TB-1	TILE BASE

INTERIOR ELEVATION NOTES

1. INTERIOR ELEVATIONS ARE ILLUSTRATIVE & INTENDED TO CONVEY DESIGN INTENT. VERIFY FINISHES, PROFILES & HEIGHTS COMPLY WITH CURRENT VERSION OF TEXAS ACCESSIBILITY STANDARDS & OTHER JURISDICTION REQUIREMENTS.
2. MATERIALS DEPICTED ARE GENERIC (EXCEPT WHERE NOTED) AND INTENDED ONLY TO SHOW RELATIONSHIPS, LOCATIONS & HEIGHTS OF FINAL FINISHES. REFER TO FINISH SCHEDULES FOR SPECIFIED MATERIALS, STYLES, COLORS & PATTERNS.
3. NOTIFY ARCHITECT OF ANY DISCREPANCIES BEFORE ORDERING MATERIALS AND/OR PROCEEDING WITH INSTALLATIONS.

TOILET ACCESSORIES

GB-1	GRAB BAR - 42"
GB-2	GRAB BAR - 36"
TP-1	TOILET TISSUE (ROLL) DISPENSER
SN-1	SANITARY NAPKIN DISPOSAL
CT-1	RECESSED PAPER TOWEL DISPENSER/WASTE RECEPTACLE
MS-1	MOP SHELF
SC-1	SHOWER CURTAIN 70"W X 72" H
DH-1	DOUBLE HOOK
TS-1	TOILET SEAT COVER DISPENSER

MILLWORK NOTES

1. SUBMIT MILLWORK SHOP DRAWINGS TO ARCHITECT FOR REVIEW & APPROVAL PRIOR TO FABRICATION.
2. VERIFY T.A.S. COMPLIANCE. NOTIFY ARCHITECT OF ANY CONFLICTS PRIOR TO FABRICATION.
3. VERIFY W/ OWNER ALL KITCHENETTE EQUIPMENT (MICROWAVE, DISHWASHER, REFRIGERATOR, UNDER COUNTER REFRIGERATOR, ETC.) DIMENSIONAL REQUIREMENTS PRIOR TO MILLWORK FABRICATION.
4. PROVIDE END PANELS ON ALL CABINET FRONTS AT JUNCTIONS WITH WALL & INSIDE CORNERS TO ALLOW DOORS TO OPEN A FULL 90-DEGREES & DRAWERS TO FULLY EXTEND.
5. COORDINATE DEPTH OF CABINET DOOR & DRAWER HARDWARE TO ALLOW DOORS TO OPEN A FULL 90-DEGREES & DRAWERS TO FULLY EXTEND AT INSIDE CORNERS
6. PROVIDE METAL SUPPORT BRACKETS & BLOCKING AT ALL UNSUPPORTED COUNTERS (4'-0" O.C. MAX).
7. PROVIDE DOUG MOCKETT BG1 CABLE GROMMET W/ CORD SLOTTED CAP @ COUNTERTOP SURFACE (COORDINATE COLOR W/ COUNTERTOP). COORDINATE LOCATION WITH EQUIPMENT & DATA PLANS.
8. REFER TO SPECIFICATION DIVISIONS 06 20 00 & 06 41 00 FOR ADDITIONAL INFORMATION.

Texas Department of Transportation

COPYRIGHT © 2021

Jacobs
1999 Bryan Street, Suite 1200
Dallas, Tx 75201

JACOBS ENGINEERING GROUP, INC
TEXAS REGISTRATION #2966

REGISTERED ARCHITECT STEVEN JOHN THOMAS STATE OF TEXAS
04/21/2021

DALLAS DISTRICT (18)
COLLIN COUNTY
McKinney Area Engineering and Maintenance Facility
2205 TX-5, McKinney, TX 75069
PROJECT NO. 18-470420012

ISSUED: 2021.04.21
DRAWN BY: I. Eloualid
REVISIONS:

ENLARGED PLANS, RCPS & ELEVATIONS

A6.3

THIS DRAWING CREATED FOR PRODUCTION ON 22"x34" SHEET SIZE. DO NOT SCALE PRINTS.

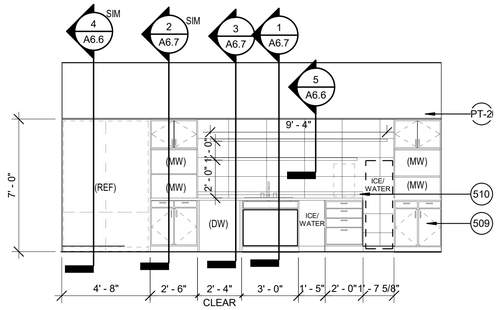

4 INTERIOR ELEVATION - BREAK ROOM
1/4" = 1'-0"

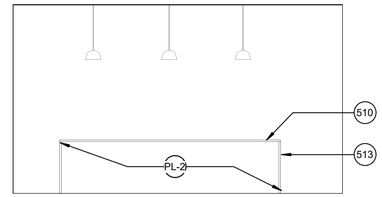

5 INTERIOR ELEVATION - BREAK ROOM
1/4" = 1'-0"

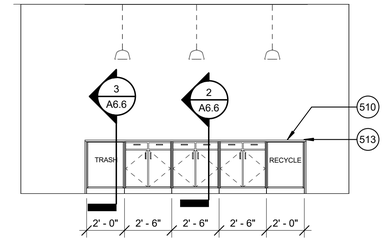

6 INTERIOR ELEVATION - BREAK ROOM
1/4" = 1'-0"

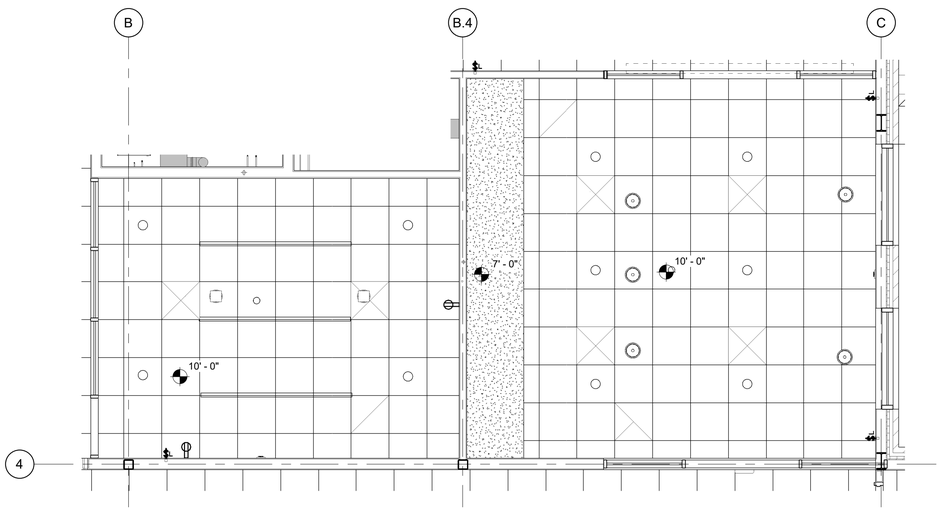

3 ENLARGED RCP - CONFERENCE / BREAK ROOM
1/4" = 1'-0"

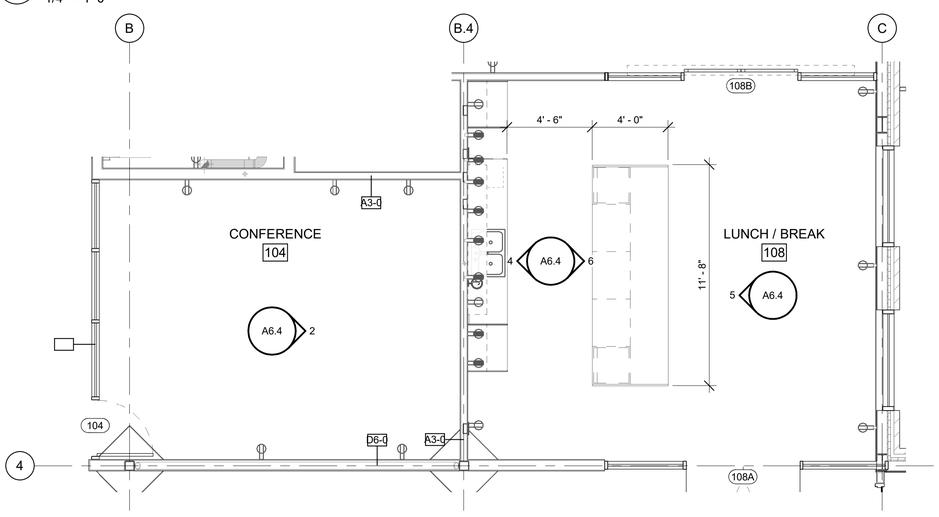

1 ENLARGED PLAN - CONFERENCE / BREAK ROOM
1/4" = 1'-0"

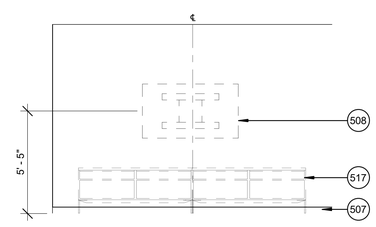

2 INTERIOR ELEVATION - CONFERENCE
1/4" = 1'-0"

SCALES

1/4" = 1'-0"

4' 3' 2' 1' 0" 2' 4' 8'

KEY NOTES

507	BASE AS SCHEDULED
508	TV MONITOR, COORDINATE W/ OWNER FOR SPECS. GC TO PROVIDE BLOCKING & POWER/DATA AS REQUIRED
509	PLASTIC LAMINATE ALL EXPOSED CABINET SURFACES - PL-1
510	SOLID SURFACE COUNTERTOP SS-1 WITH BACKSPLASH
513	WATERFALL EDGE
517	FURNITURE DASHED FOR REFERENCE ONLY
PL-2	PLASTIC LAMINATE
PT-2	PAINTED WALL COLOR

INTERIOR ELEVATION NOTES

1. INTERIOR ELEVATIONS ARE ILLUSTRATIVE & INTENDED TO CONVEY DESIGN INTENT. VERIFY FINISHES, PROFILES & HEIGHTS COMPLY WITH CURRENT VERSION OF TEXAS ACCESSIBILITY STANDARDS & OTHER JURISDICTION REQUIREMENTS.
2. MATERIALS DEPICTED ARE GENERIC (EXCEPT WHERE NOTED) AND INTENDED ONLY TO SHOW RELATIONSHIPS, LOCATIONS & HEIGHTS OF FINAL FINISHES. REFER TO FINISH SCHEDULES FOR SPECIFIED MATERIALS, STYLES, COLORS & PATTERNS.
3. NOTIFY ARCHITECT OF ANY DISCREPANCIES BEFORE ORDERING MATERIALS AND/OR PROCEEDING WITH INSTALLATIONS.

MILLWORK NOTES

1. SUBMIT MILLWORK SHOP DRAWINGS TO ARCHITECT FOR REVIEW & APPROVAL PRIOR TO FABRICATION.
2. VERIFY T.A.S. COMPLIANCE. NOTIFY ARCHITECT OF ANY CONFLICTS PRIOR TO FABRICATION.
3. VERIFY W/ OWNER ALL KITCHENETTE EQUIPMENT (MICROWAVE, DISHWASHER, REFRIGERATOR, UNDER COUNTER REFRIGERATOR, ETC.) DIMENSIONAL REQUIREMENTS PRIOR TO MILLWORK FABRICATION.
4. PROVIDE END PANELS ON ALL CABINET FRONTS AT JUNCTIONS WITH WALL & INSIDE CORNERS TO ALLOW DOORS TO OPEN A FULL 90-DEGREES & DRAWERS TO FULLY EXTEND.
5. COORDINATE DEPTH OF CABINET DOOR & DRAWER HARDWARE TO ALLOW DOORS TO OPEN A FULL 90-DEGREES & DRAWERS TO FULLY EXTEND AT INSIDE CORNERS
6. PROVIDE METAL SUPPORT BRACKETS & BLOCKING AT ALL UNSUPPORTED COUNTERS (4'-0" O.C. MAX).
7. PROVIDE DOUG MOCKETT BG1 CABLE GROMMET W/ CORD SLOTTED CAP @ COUNTERTOP SURFACE (COORDINATE COLOR W/ COUNTERTOP). COORDINATE LOCATION WITH EQUIPMENT & DATA PLANS.
8. REFER TO SPECIFICATION DIVISIONS 06 20 00 & 06 41 00 FOR ADDITIONAL INFORMATION.

Texas Department of Transportation

COPYRIGHT © 2021

Jacobs
1999 Bryan Street, Suite 1200
Dallas, Tx 75201

JACOBS ENGINEERING GROUP, INC
TEXAS REGISTRATION #2966

REGISTERED ARCHITECT JOHN THOMAS HUTCHINSON 16318 STATE OF TEXAS
04/21/2021

DALLAS DISTRICT (18)
COLLIN COUNTY
McKinney Area Engineering and Maintenance Facility
2205 TX-5, McKinney, TX 75069
PROJECT NO. 18-470420012

ISSUED: 2021.04.21
DRAWN BY: I. Eloualid
REVISIONS:

ENLARGED PLANS, RCPS & ELEVATIONS

A6.4

THIS DRAWING CREATED FOR PRODUCTION ON 22"x34" SHEET SIZE. DO NOT SCALE PRINTS.

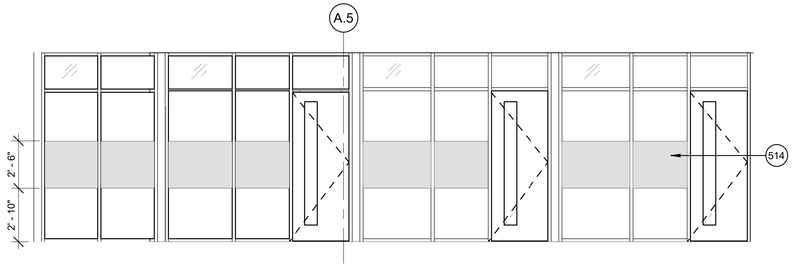

9 INTERIOR ELEVATION - MAINTENANCE OFFICE
1/4" = 1'-0"

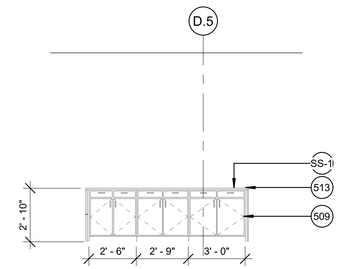

10 INTERIOR ELEVATION - SOILS
1/4" = 1'-0"

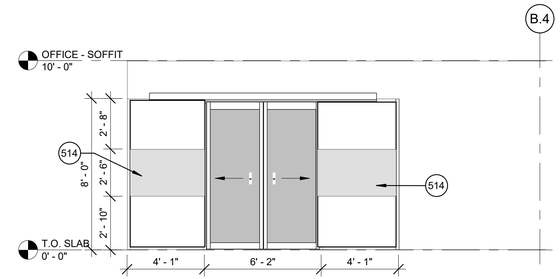

11 INTERIOR ELEVATION
1/4" = 1'-0"

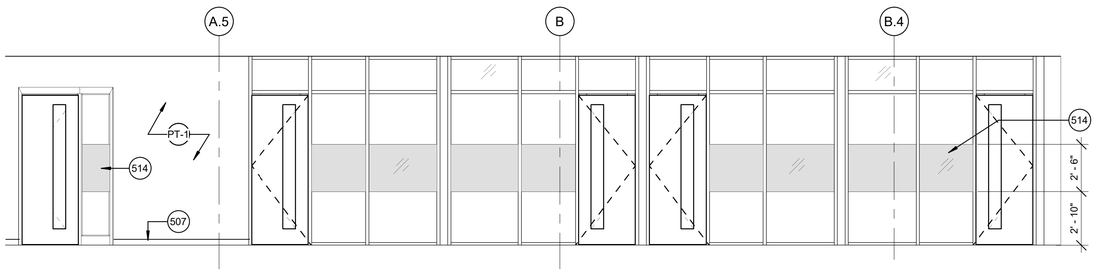

7 INTERIOR ELEVATION - ENGINEERING OFFICE
1/4" = 1'-0"

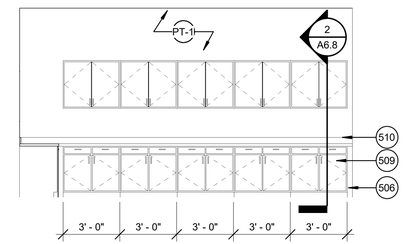

8 INTERIOR ELEVATION - SOILS
1/4" = 1'-0"

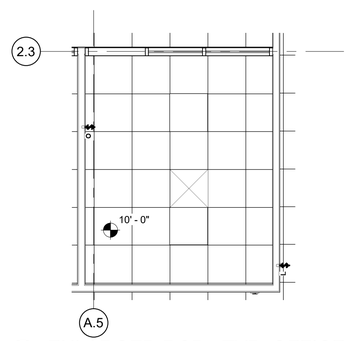

4 ENLARGED RCP - TYP. OFFICE
1/4" = 1'-0"

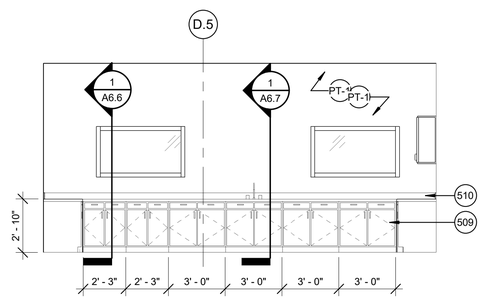

5 INTERIOR ELEVATION - SOILS
1/4" = 1'-0"

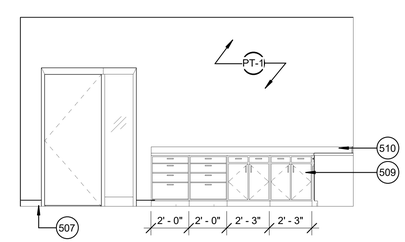

6 INTERIOR ELEVATION - SOILS
1/4" = 1'-0"

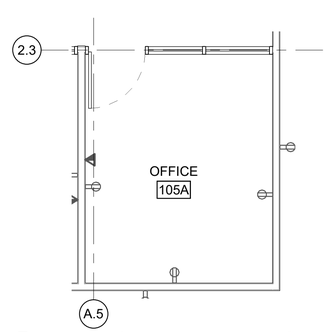

1 ENLARGED PLAN - TYP. OFFICE
1/4" = 1'-0"

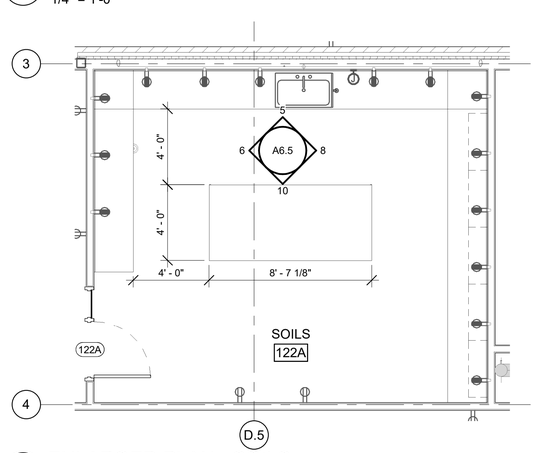

2 ENLARGED PLAN - SOILS
1/4" = 1'-0"

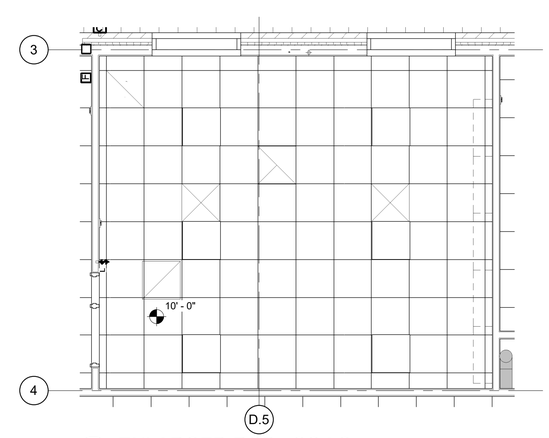

3 ENLARGED RCP - SOILS
1/4" = 1'-0"

SCALES

1/4" = 1'-0"

4' 3' 2' 1' 0" 2' 4' 8'

KEY NOTES

506	EQUAL FILLER PANELS AT BOTH ENDS
507	BASE AS SCHEDULED
509	PLASTIC LAMINATE ALL EXPOSED CABINET SURFACES - PL-1
510	SOLID SURFACE COUNTERTOP SS-1 WITH BACKSPLASH
513	WATERFALL EDGE
514	GLASS FILM FL-1
PT-1	PAINTED WALL COLOR
SS-1	SOLID SURFACE

INTERIOR ELEVATION NOTES

1. INTERIOR ELEVATIONS ARE ILLUSTRATIVE & INTENDED TO CONVEY DESIGN INTENT. VERIFY FINISHES, PROFILES & HEIGHTS COMPLY WITH CURRENT VERSION OF TEXAS ACCESSIBILITY STANDARDS & OTHER JURISDICTION REQUIREMENTS.
2. MATERIALS DEPICTED ARE GENERIC (EXCEPT WHERE NOTED) AND INTENDED ONLY TO SHOW RELATIONSHIPS, LOCATIONS & HEIGHTS OF FINAL FINISHES. REFER TO FINISH SCHEDULES FOR SPECIFIED MATERIALS, STYLES, COLORS & PATTERNS.
3. NOTIFY ARCHITECT OF ANY DISCREPANCIES BEFORE ORDERING MATERIALS AND/OR PROCEEDING WITH INSTALLATIONS.

Texas Department of Transportation

COPYRIGHT © 2021

Jacobs
1999 Bryan Street, Suite 1200
Dallas, Tx 75201

JACOBS ENGINEERING GROUP, INC
TEXAS REGISTRATION #2966

REGISTERED ARCHITECT STEVEN JOHN THOMAS STATE OF TEXAS
04/21/2021

DALLAS DISTRICT (18)
COLLIN COUNTY
McKinney Area Engineering and Maintenance Facility
2205 TX-5, McKinney, TX 75069
PROJECT NO. 18-470420012

ISSUED: 2021.04.21
DRAWN BY: I. Eloualid
REVISIONS:

ENLARGED PLANS, RCPS & ELEVATIONS

A6.5

THIS DRAWING CREATED FOR PRODUCTION ON 22"x34" SHEET SIZE. DO NOT SCALE PRINTS.

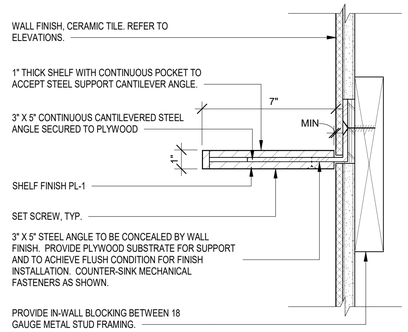

5 FLOATING SHELF
3" = 1'-0"

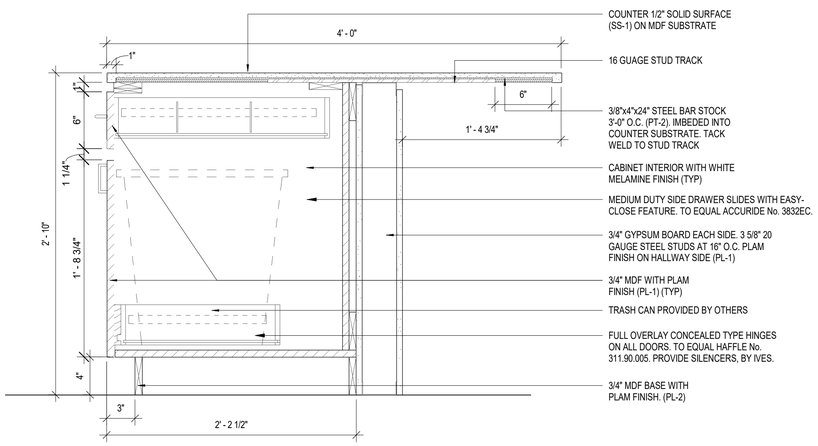

3 BASE CABINET TRASH RECEPTACLE
1 1/2" = 1'-0"

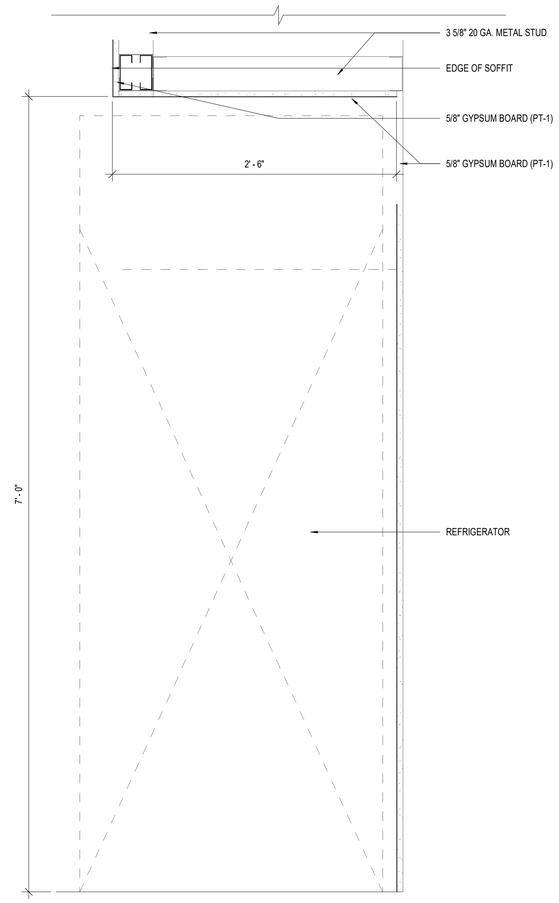

4 SECTION AT REFRIGERATOR
1 1/2" = 1'-0"

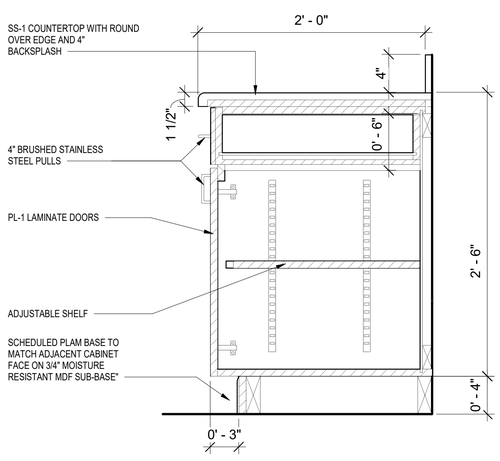

1 MILLWORK SECTION - LOWER CABINET
1 1/2" = 1'-0"

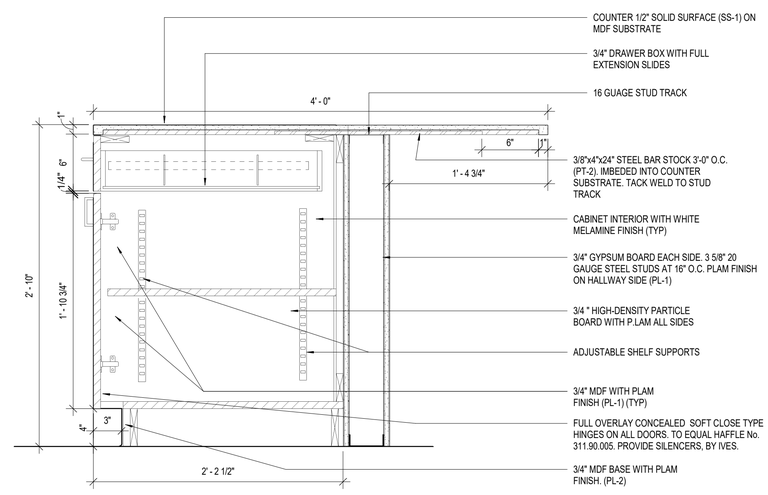

2 BASE CABINET TYPICAL AT ISLAND
1 1/2" = 1'-0"

SCALES

1 1/2" = 1'-0"
12" 9" 6" 3" 0" 1'

3" = 1'-0"
6" 5" 4" 3" 2" 1" 0" 6"

MILLWORK NOTES

1. SUBMIT MILLWORK SHOP DRAWINGS TO ARCHITECT FOR REVIEW & APPROVAL PRIOR TO FABRICATION.
2. VERIFY T.A.S. COMPLIANCE. NOTIFY ARCHITECT OF ANY CONFLICTS PRIOR TO FABRICATION.
3. VERIFY W/ OWNER ALL KITCHENETTE EQUIPMENT (MICROWAVE, DISHWASHER, REFRIGERATOR, UNDER COUNTER REFRIGERATOR, ETC.) DIMENSIONAL REQUIREMENTS PRIOR TO MILLWORK FABRICATION.
4. PROVIDE END PANELS ON ALL CABINET FRONTS AT JUNCTIONS WITH WALL & INSIDE CORNERS TO ALLOW DOORS TO OPEN A FULL 90-DEGREES & DRAWERS TO FULLY EXTEND.
5. COORDINATE DEPTH OF CABINET DOOR & DRAWER HARDWARE TO ALLOW DOORS TO OPEN A FULL 90-DEGREES & DRAWERS TO FULLY EXTEND AT INSIDE CORNERS
6. PROVIDE METAL SUPPORT BRACKETS & BLOCKING AT ALL UNSUPPORTED COUNTERS (4'-0" O.C. MAX).
7. PROVIDE DOUG MOCKETT BG1 CABLE GROMMET W/ CORD SLOTTED CAP @ COUNTERTOP SURFACE (COORDINATE COLOR W/ COUNTERTOP). COORDINATE LOCATION WITH EQUIPMENT & DATA PLANS.
8. REFER TO SPECIFICATION DIVISIONS 06 20 00 & 06 41 00 FOR ADDITIONAL INFORMATION.

Texas Department of Transportation

COPYRIGHT © 2021

Jacobs
1999 Bryan Street, Suite 1200
Dallas, Tx 75201
JACOBS ENGINEERING GROUP, INC
TEXAS REGISTRATION #2966

REGISTERED ARCHITECT STEVEN JOHN THERMER STATE OF TEXAS
04/21/2021

DALLAS DISTRICT (18)
COLLIN COUNTY
McKinney Area Engineering and Maintenance Facility
2205 TX-5, McKinney, TX 75069
PROJECT NO. 18-470420012

ISSUED: 2021.04.21
DRAWN BY: I. Eloualid
REVISIONS:

MILLWORK SECTIONS & DETAILS

A6.6

THIS DRAWING CREATED FOR PRODUCTION ON 22"x34" SHEET SIZE. DO NOT SCALE PRINTS.

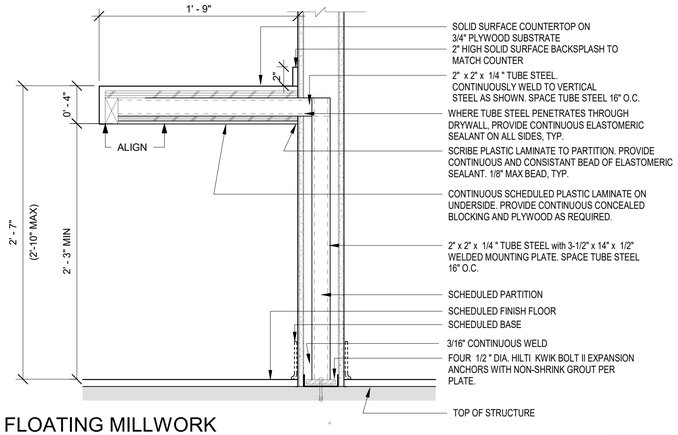

4 FLOATING MILLWORK
1 1/2" = 1'-0"

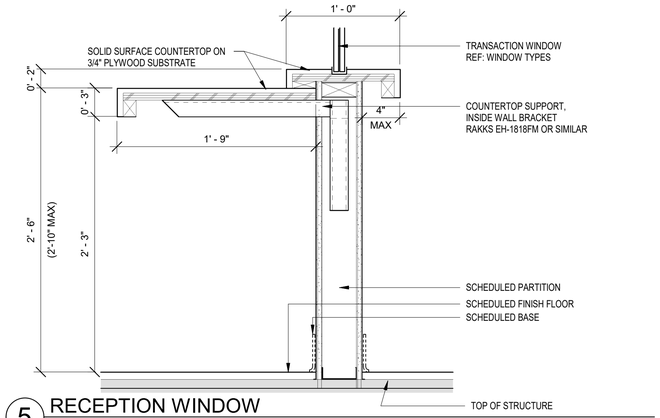

5 RECEPTION WINDOW
1 1/2" = 1'-0"

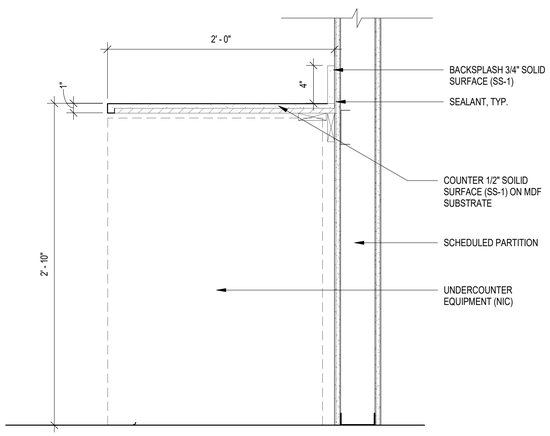

3 UNDERCOUNTER EQUIPMENT
1 1/2" = 1'-0"

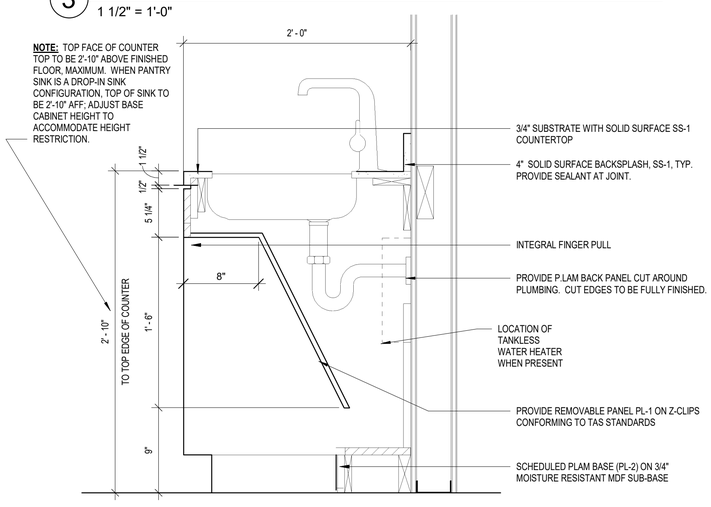

1 BASE CABINET WITH SINK
1 1/2" = 1'-0"

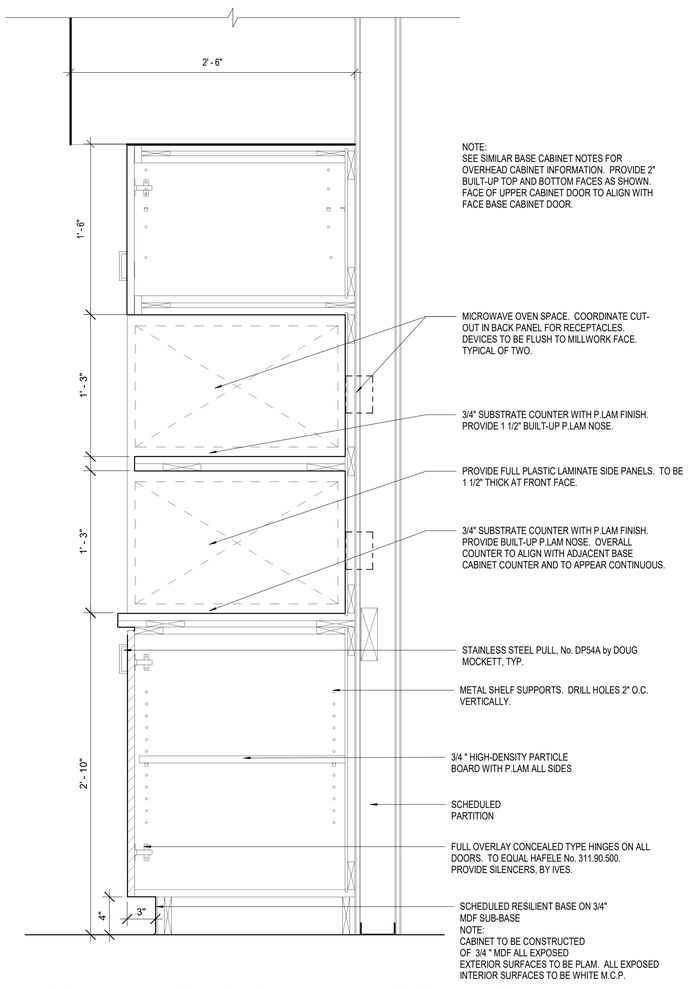

2 FULL HEIGHT CABINET WITH MICROWAVES
1 1/2" = 1'-0"

SCALES

1 1/2" = 1'-0"
12" 9" 6" 3" 0" 1'

Texas Department of Transportation

COPYRIGHT © 2021

Jacobs
1999 Bryan Street, Suite 1200
Dallas, Tx 75201
JACOBS ENGINEERING GROUP, INC
TEXAS REGISTRATION #2966

REGISTERED ARCHITECT
STEPHEN JOHN TRUMMEL
9446
STATE OF TEXAS
04/21/2021

DALLAS DISTRICT (18)
COLLIN COUNTY
McKinney Area Engineering and Maintenance Facility
2205 TX-5, McKinney, TX 75069
PROJECT NO. 18-470420012

ISSUED: 2021.04.21
DRAWN BY: I. Eloualid
REVISIONS:

MILLWORK SECTIONS & DETAILS

A6.7

THIS DRAWING CREATED FOR PRODUCTION ON 22"x34" SHEET SIZE. DO NOT SCALE PRINTS.

SCALES

1 1/2" = 1'-0"

12" 9" 6" 3" 0" 1'

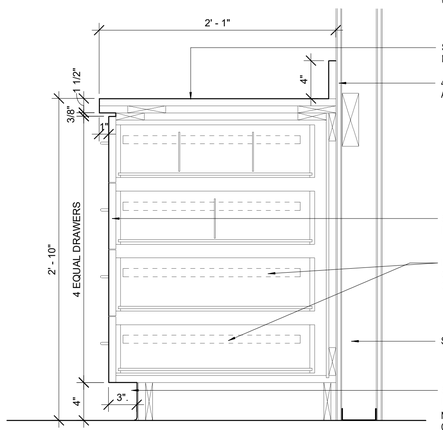

NOTE: PROVIDE REMOVABLE COMPARTMENT DIVIDERS AT TOP TWO DRAWERS. TO YIELD SIX (6) EQUAL COMPARTMENTS AT TOP DRAWER AND FOUR (4) EQUAL COMPARTMENTS AT SECOND DRAWER. WHITE MELAMINE FINISH.

SS-1 COUNTERTOP WITH ROUND OVER EDGE ON MDF SUBSTRATE AND 4" BACKSPLASH

4" BACKSPLASH WITH PLAM, TYP. PROVIDE SEALANT AT JOINT.

STAINLESS STEEL PULL, No. DP54A by DOUG MOCKETT, TYP.

MEDIUM DUTY SIDE DRAWER SLIDES WITH EASY-CLOSE FEATURE. TO EQUAL ACCURIDE No. 3832EC, TYPICAL.

SCHEDULED PARTITION

SCHEDULED RESILIENT BASE ON 3/4" MDF SUB-BASE

NOTE:
CABINET TO BE CONSTRUCTED OF 3/4 " MDF ALL EXPOSED EXTERIOR SURFACES TO BE PLAM. ALL EXPOSED INTERIOR SURFACES TO BE WHITE M.C.P.

3 BASE CABINET WITH FOUR EQUAL DRAWERS

1 1/2" = 1'-0"

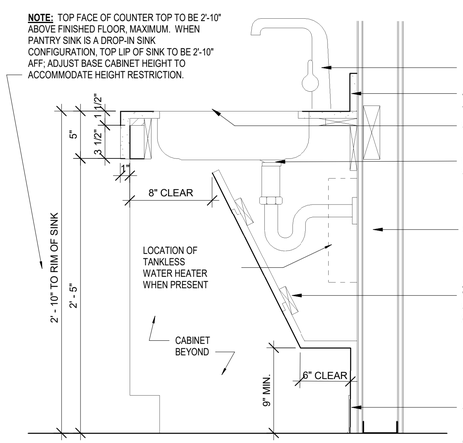

NOTE: TOP FACE OF COUNTER TOP TO BE 2'-10" ABOVE FINISHED FLOOR, MAXIMUM. WHEN PANTRY SINK IS A DROP-IN SINK CONFIGURATION, TOP LIP OF SINK TO BE 2'-10" AFF; ADJUST BASE CABINET HEIGHT TO ACCOMMODATE HEIGHT RESTRICTION.

LAVATORY AND FAUCET (REF PLUMB DWGS)

4" BACKSPLASH SS-1, TYP. PROVIDE SEALANT AT JOINT.

SS-1 COUNTERTOP ON 3/4" SUBSTRATE

REF TO PLUMBING RAWINGS FOR SPECIFICATIONS

SCHEDULED PARTITION

PROVIDE A 16"X25" REMOVABLE ACCESS PANEL SECURED WITH CHROME FLAT HEAD SCREWS AND FINISH WASHERS. (4 TOTAL).

SCHEDULED BASE ON P-LAM PANEL

NOTE:
CABINET TO BE CONSTRUCTED OF 3/4 " MDF. ALL SURFACES TO BE PLAM.

1 BASE CABINET WITH ADA SINK

1 1/2" = 1'-0"

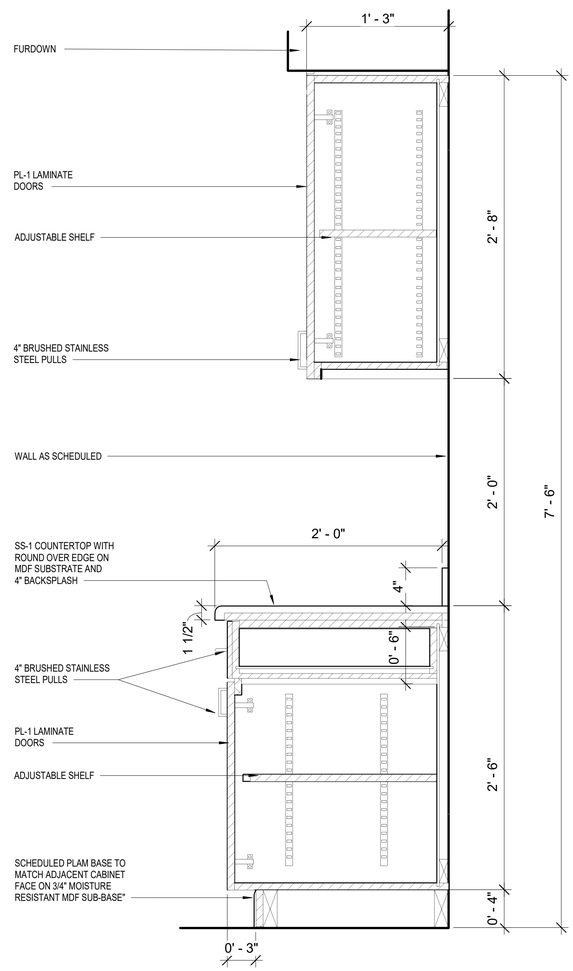

2 MILLWORK SECTION - UPPER & LOWER

1 1/2" = 1'-0"

Texas Department of Transportation

COPYRIGHT © 2021

Jacobs
1999 Bryan Street, Suite 1200
Dallas, Tx 75201

JACOBS ENGINEERING GROUP, INC
TEXAS REGISTRATION #2966

REGISTERED ARCHITECT STEVEN JOHN THERMAN STATE OF TEXAS
04/21/2021

DALLAS DISTRICT (18)
COLLIN COUNTY
McKinney Area Engineering and Maintenance Facility
2205 TX-5, McKinney, TX 75069
PROJECT NO. 18-470420012

ISSUED: 2021.04.21
DRAWN BY: I. Eloualid
REVISIONS:

MILLWORK SECTIONS & DETAILS

A6.8

THIS DRAWING CREATED FOR PRODUCTION ON 22"x34" SHEET SIZE. DO NOT SCALE PRINTS.

KEY NOTES

KEYPLAN

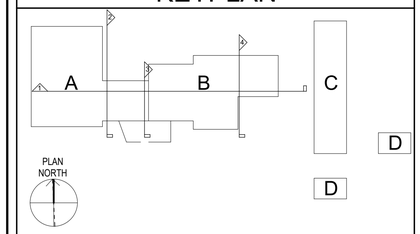

SCALES

3/32" = 1'-0"

16' 8' 0' 8' 16' 24'

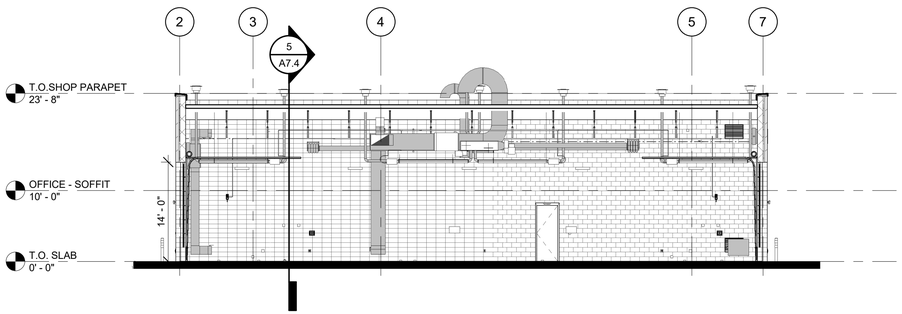

4 OVERALL BUILDING SECTION - SHOPS - N/S

3/32" = 1'-0"

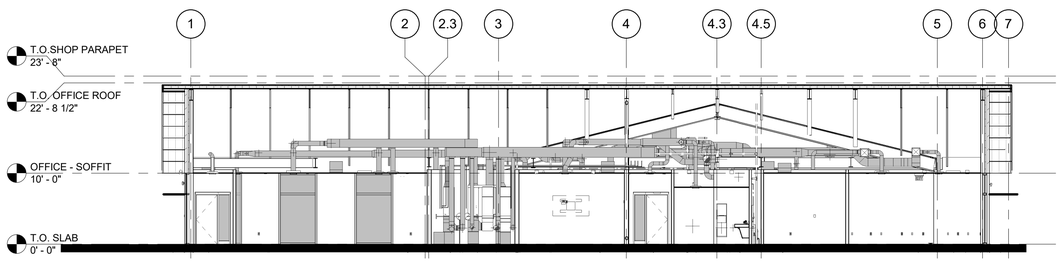

2 OVERALL BUILDING SECTION - OFFICE - N/S

3/32" = 1'-0"

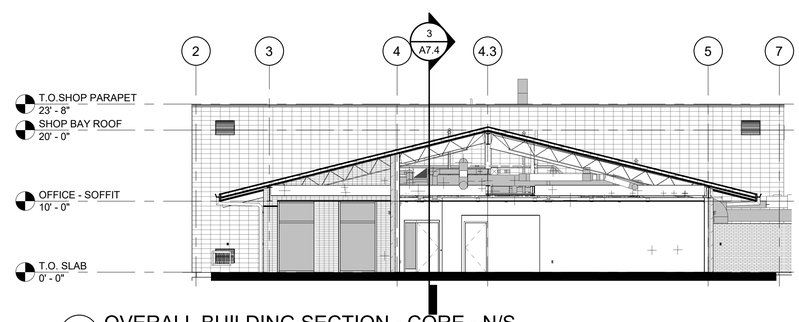

3 OVERALL BUILDING SECTION - CORE - N/S

3/32" = 1'-0"

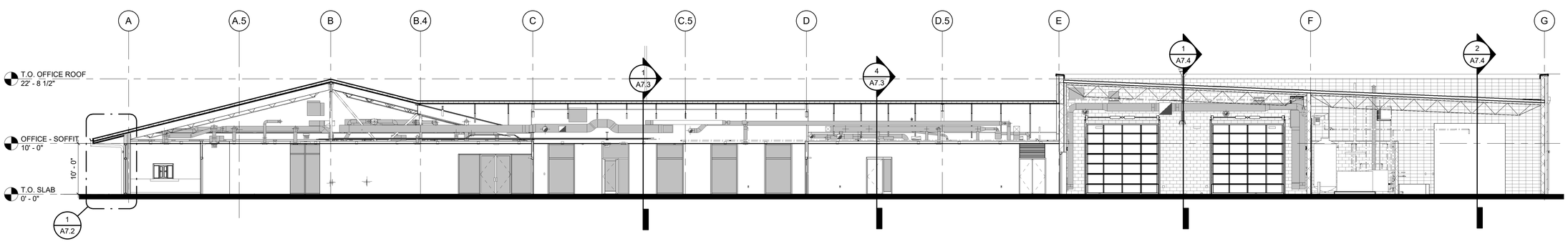

1 OVERALL BUILDING SECTION - W/E

3/32" = 1'-0"

Texas Department of Transportation

COPYRIGHT © 2021

Jacobs

1999 Bryan Street, Suite 1200
Dallas, Tx 75201

JACOBS ENGINEERING GROUP, INC
TEXAS REGISTRATION #2966

REGISTERED ARCHITECT STEVEN JOHN TREMMEL 9414 STATE OF TEXAS

04/21/2021

DALLAS DISTRICT (18)
COLLIN COUNTY

McKinney Area Engineering and Maintenance Facility

2205 TX-5, McKinney, TX 75069

PROJECT NO. 18-470420012

ISSUED: 2021.04.21

DRAWN BY: I. Eloualid

REVISIONS:

BUILDING SECTIONS

A7.1

THIS DRAWING CREATED FOR PRODUCTION ON 22"x34" SHEET SIZE. DO NOT SCALE PRINTS.

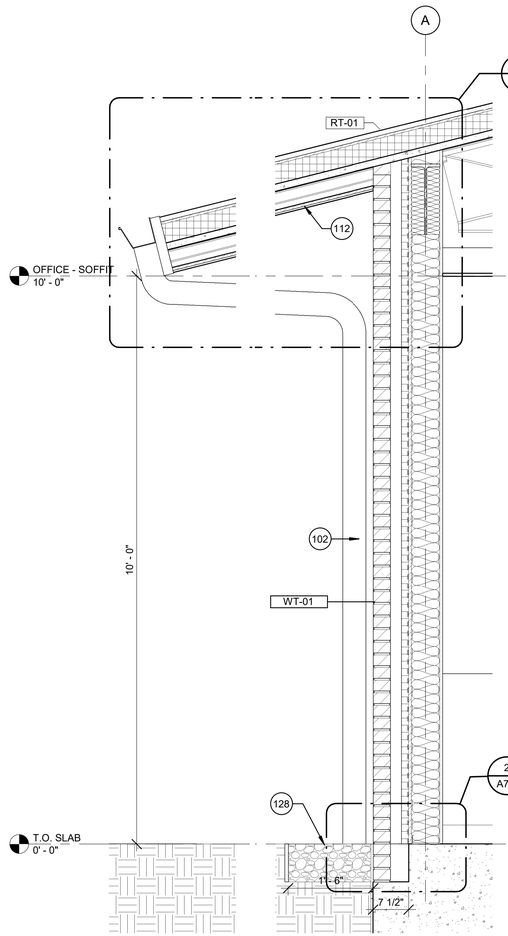

1 WALL SECTION - OFFICE
3/4" = 1'-0"

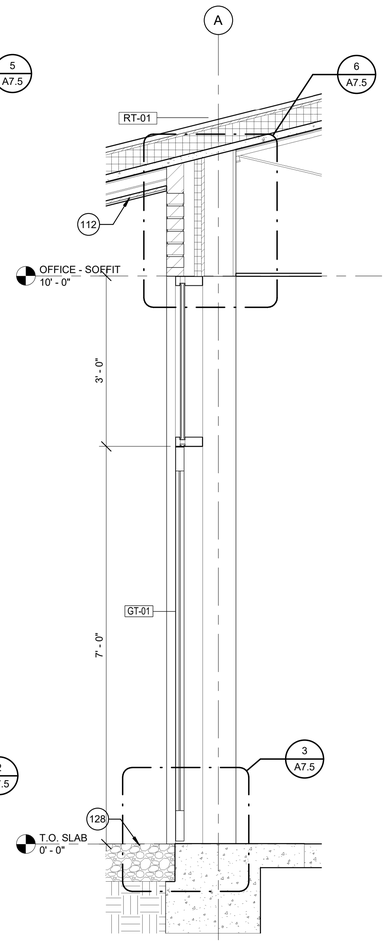

2 WALL SECTION - OFFICE
3/4" = 1'-0"

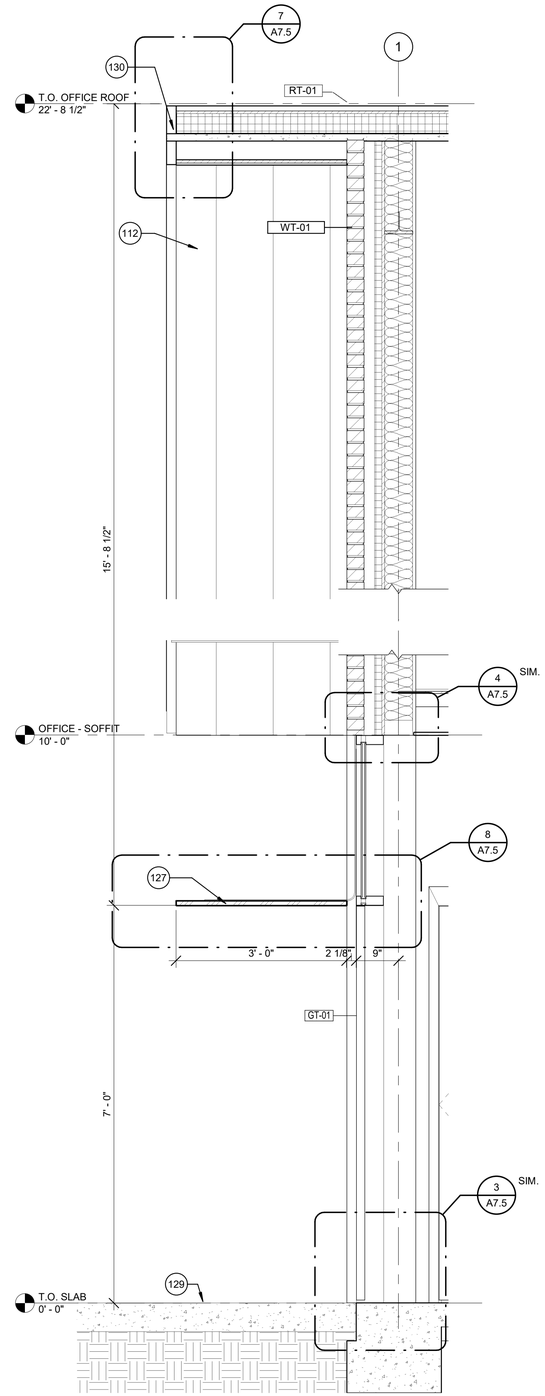

3 WALL SECTION - NORTH ENTRY
3/4" = 1'-0"

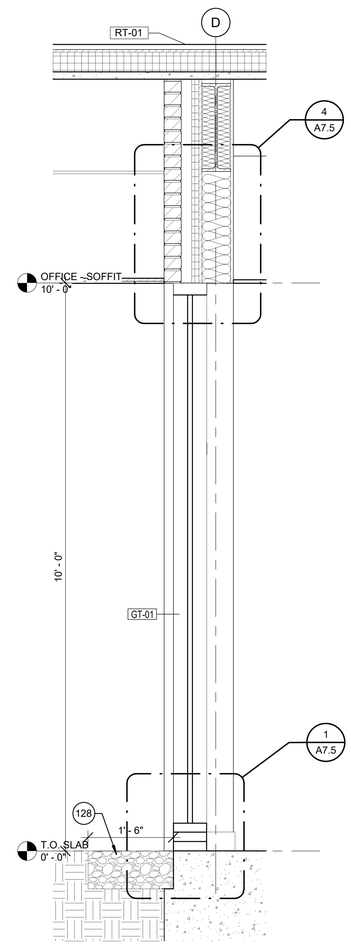

4 WALL SECTION - LAB OFFICE
3/4" = 1'-0"

SCALES

3/4" = 1'-0"
24" 18" 12" 6" 0" 1' 2'

1 1/2" = 1'-0"
12" 9" 6" 3" 0" 1'

WALL SECTION NOTES

1. REFER TO SHEET A8.1 FOR EXTERIOR ASSEMBLIES.

KEY NOTES

102	PREFINISHED METAL DOWNSPOUT
112	METAL PANEL SOFFIT ST-01
123	LIGHT FIXTURE, REFER TO ELECTRICAL
127	ALUMINUM SUNSHADE
128	GRAVEL, REFER TO LANDSCAPE
129	CONCRETE PAD REFER LANDSCAPE
130	PREFINISHED METAL FASCIA

Texas Department of Transportation

COPYRIGHT © 2021

Jacobs
1999 Bryan Street, Suite 1200
Dallas, Tx 75201

JACOBS ENGINEERING GROUP, INC
TEXAS REGISTRATION #2966

REGISTERED ARCHITECT STEVEN JOHN THERMER STATE OF TEXAS
04/21/2021

DALLAS DISTRICT (18)
COLLIN COUNTY
McKinney Area Engineering and Maintenance Facility
2205 TX-5, McKinney, TX 75069
PROJECT NO. 18-470420012

ISSUED: 2021.04.21
DRAWN BY: I. Eloualid
REVISIONS:

WALL SECTIONS
A7.2

THIS DRAWING CREATED FOR PRODUCTION ON 22"x34" SHEET SIZE. DO NOT SCALE PRINTS.

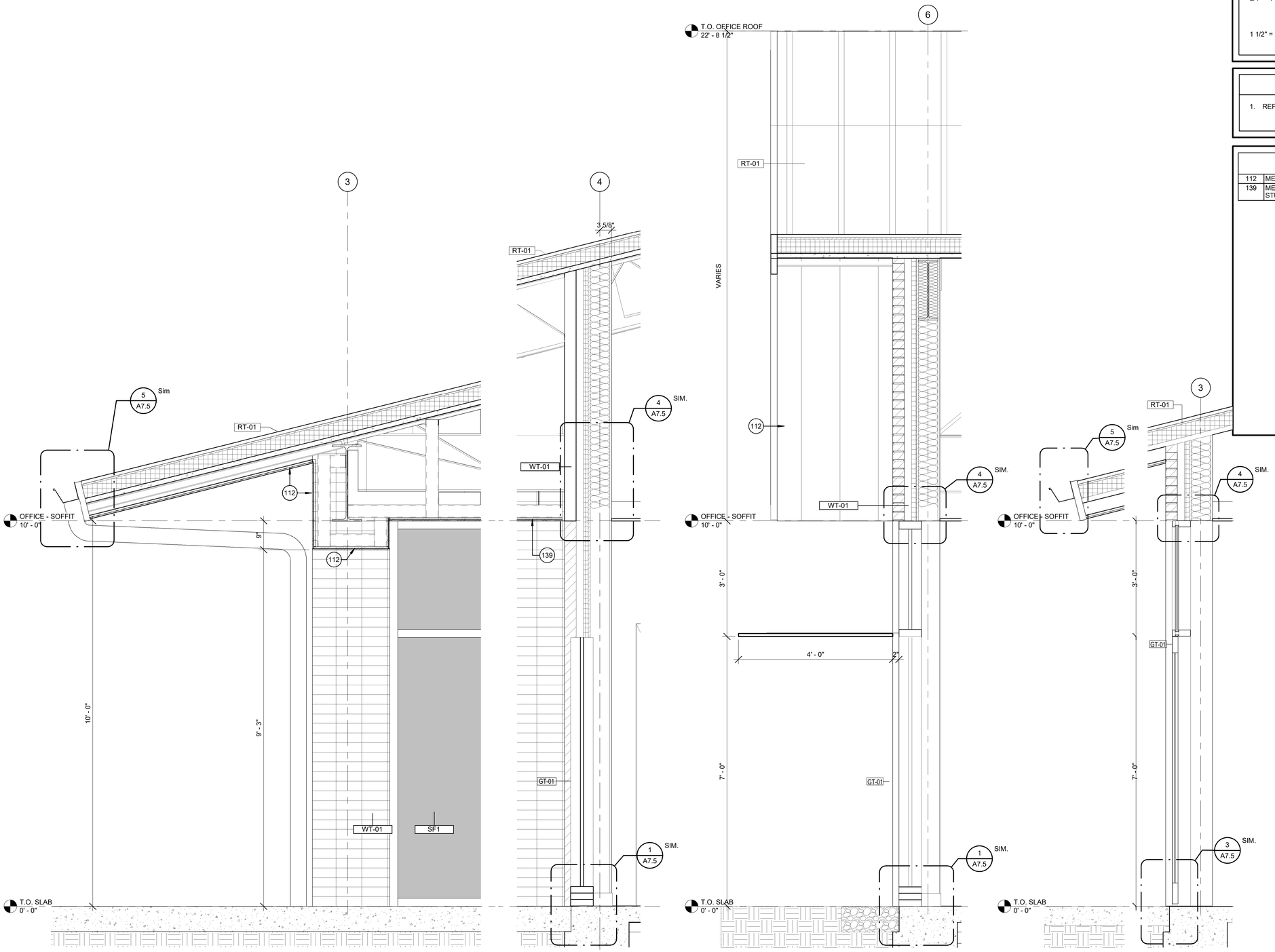

1 WALL SECTION - PATIO
3/4" = 1'-0"

3 WALL SECTION - SOUTH OFFICE GLAZING
3/4" = 1'-0"

4 WALL SECTION - LAB OFFICE ENTRY
3/4" = 1'-0"

SCALES

3/4" = 1'-0"
24" 18" 12" 6" 0" 1' 2'

1 1/2" = 1'-0"
12" 9" 6" 3" 0" 1'

WALL SECTION NOTES

1. REFER TO SHEET A8.1 FOR EXTERIOR ASSEMBLIES.

KEY NOTES

112	METAL PANEL SOFFIT ST-01
139	METAL PANEL SOFFIT ON VAPOR BARRIER, SHEATHING 3-5/8" METAL STUDS @ 16" OC

Texas Department of Transportation

COPYRIGHT © 2021

Jacobs
1999 Bryan Street, Suite 1200
Dallas, Tx 75201
JACOBS ENGINEERING GROUP, INC
TEXAS REGISTRATION #2966

REGISTERED ARCHITECT STEVEN JOHN TREMME 9414 STATE OF TEXAS
04/21/2021

DALLAS DISTRICT (18)
COLLIN COUNTY
McKinney Area Engineering and Maintenance Facility
2205 TX-5, McKinney, TX 75069
PROJECT NO. 18-470420012

ISSUED: 2021.04.21
DRAWN BY: I. Eloualid
REVISIONS:

WALL SECTIONS (CONT.)

A7.3

THIS DRAWING CREATED FOR PRODUCTION ON 22"x34" SHEET SIZE. DO NOT SCALE PRINTS.

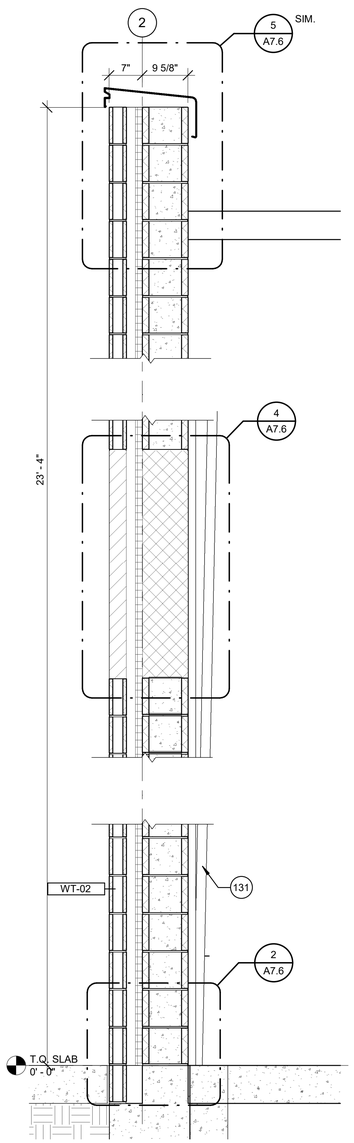

1 WALL SECTION - VEHICLE BAY
3/4" = 1'-0"

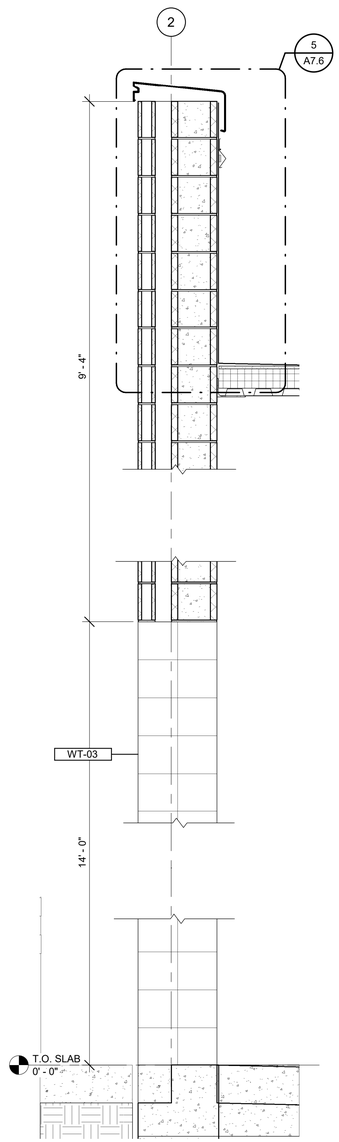

2 WALL SECTION - TRUCK WASH BAY OPENING
3/4" = 1'-0"

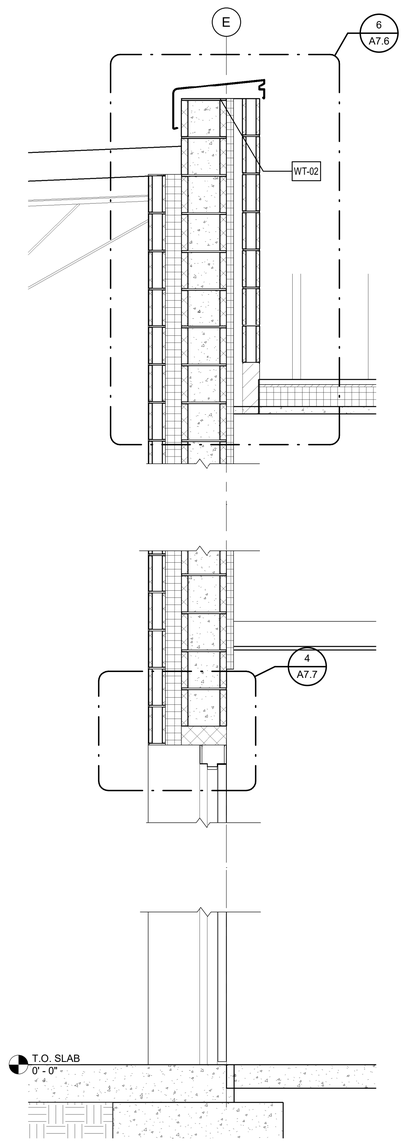

3 WALL SECTION - VEHICLE SHOP
3/4" = 1'-0"

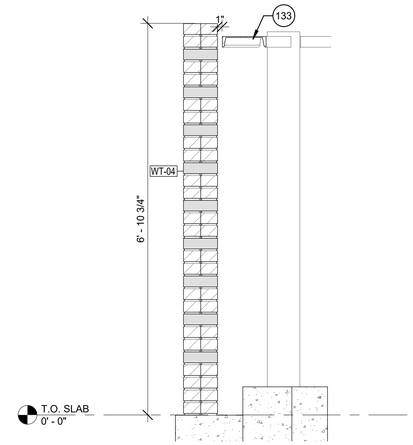

6 WALL SECTION - SCREEN WALL
3/4" = 1'-0"

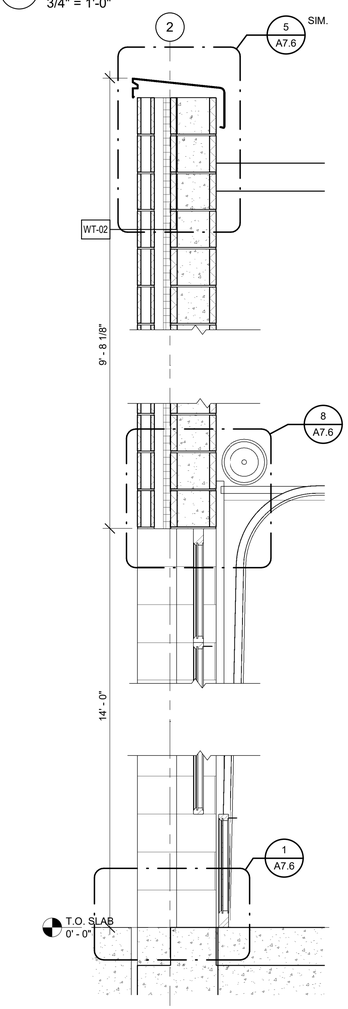

4 VEHICLE BAY SECTIONAL DOOR
3/4" = 1'-0"

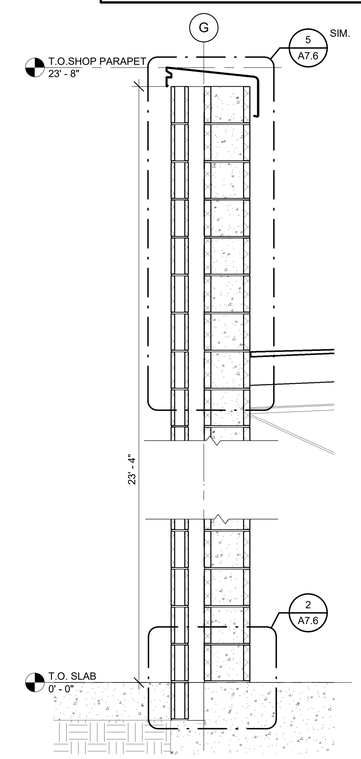

5 WALL SECTION - TRUCK WASH BAY
3/4" = 1'-0"

SCALES

3/4" = 1'-0"

24" 18" 12" 6" 0" 1' 2'

WALL SECTION NOTES

1. REFER TO SHEET A8.1 FOR EXTERIOR ASSEMBLIES.

KEY NOTES

131	SECTIONAL DOOR, REFER TO A8.3
133	STRUCTURAL SUPPORT REFER STRUCTURE

Texas Department of Transportation

COPYRIGHT © 2021

Jacobs
1999 Bryan Street, Suite 1200
Dallas, Tx 75201
JACOBS ENGINEERING GROUP, INC
TEXAS REGISTRATION #2966

REGISTERED ARCHITECT
STEVEN JOHN TREMME
STATE OF TEXAS
04/21/2021

DALLAS DISTRICT (18)
COLLIN COUNTY
McKinney Area Engineering and Maintenance Facility
2205 TX-5, McKinney, TX 75069
PROJECT NO. 18-470420012

ISSUED: 2021.04.21
DRAWN BY: I. Eloualid
REVISIONS:

WALL SECTIONS (CONT.)

A7.4

THIS DRAWING CREATED FOR PRODUCTION ON 22"X34" SHEET SIZE. DO NOT SCALE PRINTS.

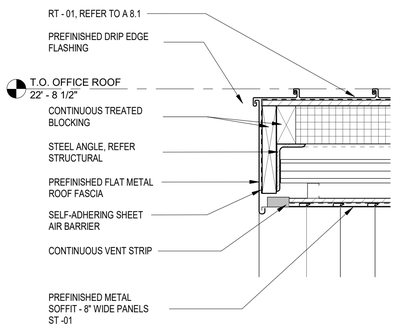

7 SECTION DETAIL - NORTH ENTRY
1 1/2" = 1'-0"

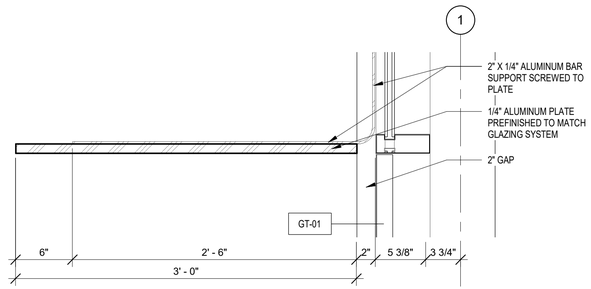

8 SUNSCREEN DETAILS
1 1/2" = 1'-0"

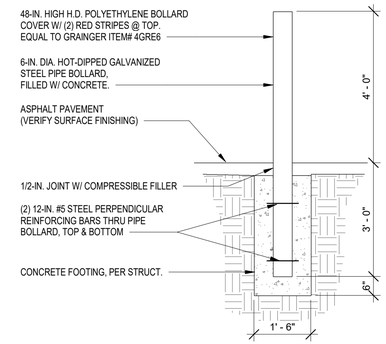

9 BOLLARD DETAIL
1/2" = 1'-0"

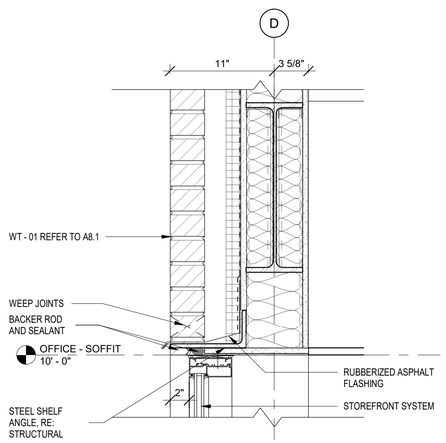

4 HEAD DETAIL AT STOREFRONT SYSTEM
1 1/2" = 1'-0"

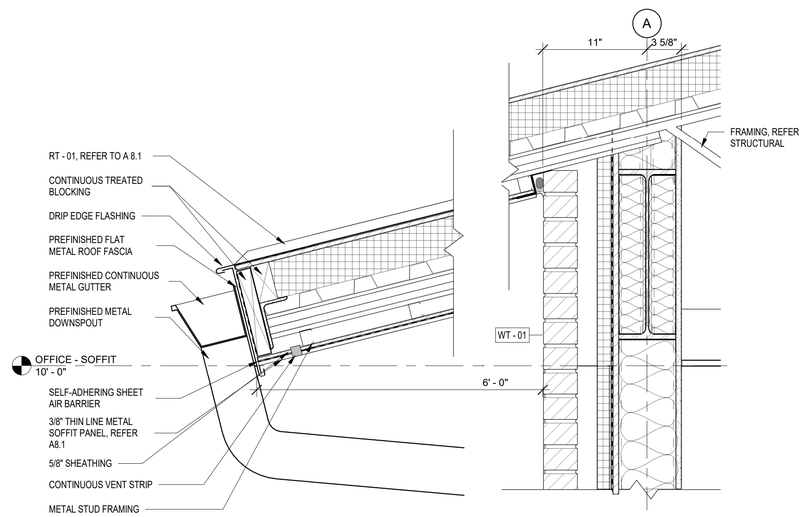

5 SECTION DETAIL - OFFICE
1 1/2" = 1'-0"

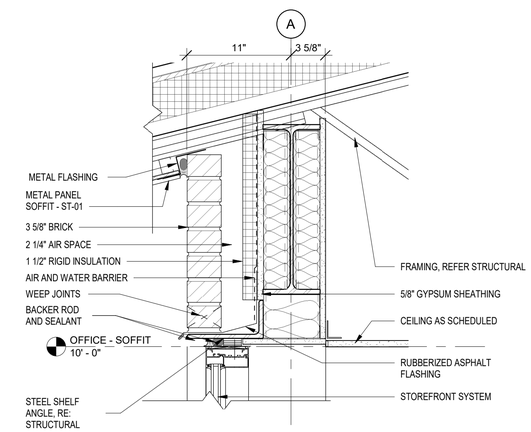

6 SECTION DETAIL - OFFICE
1 1/2" = 1'-0"

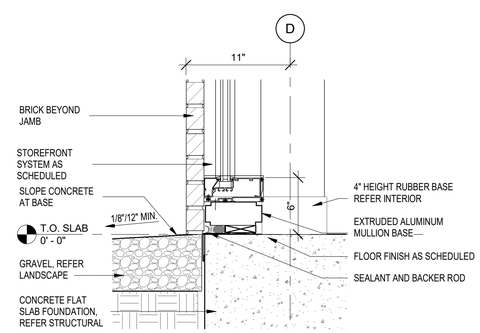

1 SILL DETAIL AT STOREFRONT SYSTEM
1 1/2" = 1'-0"

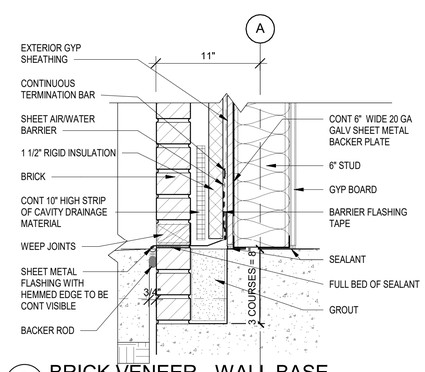

2 BRICK VENEER - WALL BASE
1 1/2" = 1'-0"

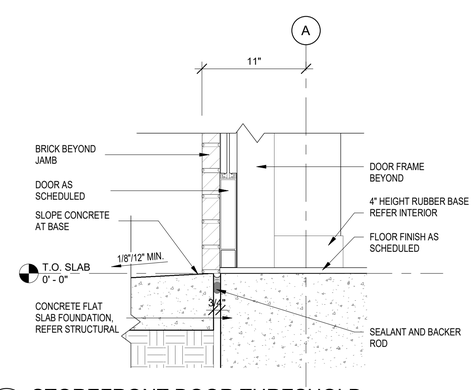

3 STOREFRONT DOOR THRESHOLD
1 1/2" = 1'-0"

Texas Department of Transportation

COPYRIGHT © 2021

Jacobs
1999 Bryan Street, Suite 1200
Dallas, Tx 75201
JACOBS ENGINEERING GROUP, INC
TEXAS REGISTRATION #2966

REGISTERED ARCHITECT STEVEN JOHN THOMAS STATE OF TEXAS
04/21/2021

DALLAS DISTRICT (18)
COLLIN COUNTY
McKinney Area Engineering and Maintenance Facility
2205 TX-5, McKinney, TX 75069
PROJECT NO. 18-470420012

ISSUED: 2021.04.21
DRAWN BY: I. Eloualid
REVISIONS:

SECTION DETAILS
A7.5

THIS DRAWING CREATED FOR PRODUCTION ON 22"x34" SHEET SIZE. DO NOT SCALE PRINTS.

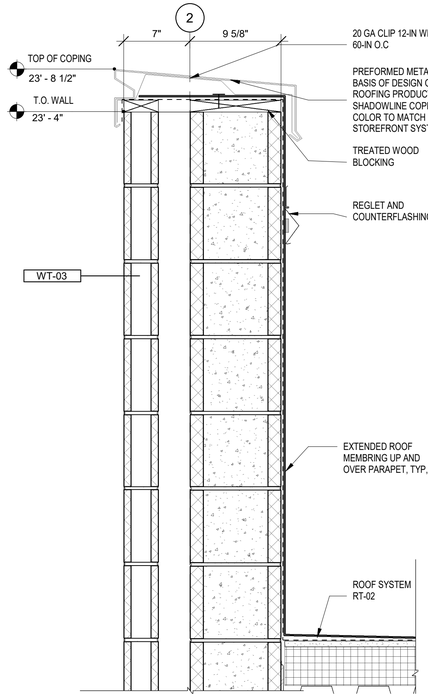

5 SECTION DETAIL - TRUCK WASH BAY
1 1/2" = 1'-0"

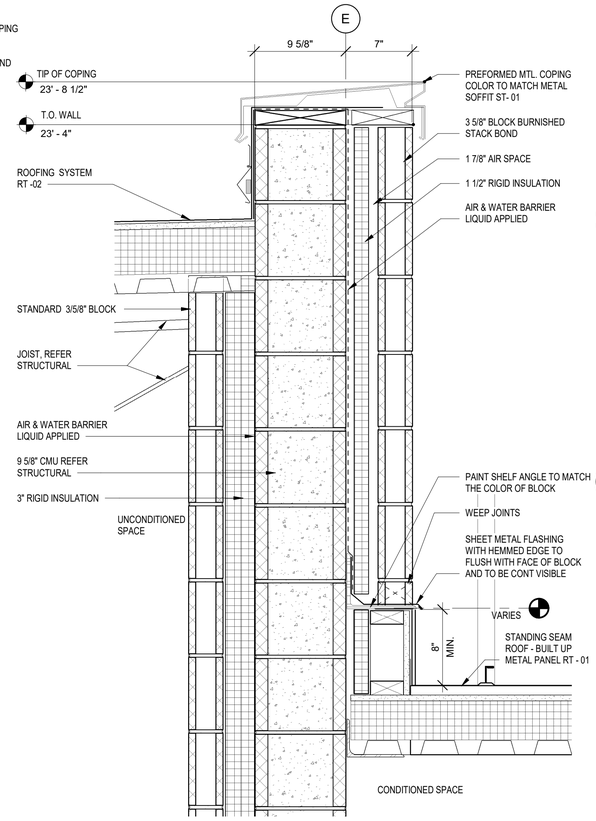

6 WALL SECTION - VEHICLE SHOP - PARAPET DETAIL
1 1/2" = 1'-0"

NOTE: VERIFY W/ THICKNESS OF INSULATION AT CRICKET TO ENSURE BOTTOM OF SCUPPER IS 2" HIGHER MAX. THAN ELEVATION OF ROOF DETAILS.

ALL JOINTS OF SEAMS TO BE SOLDERED AND WELDED.

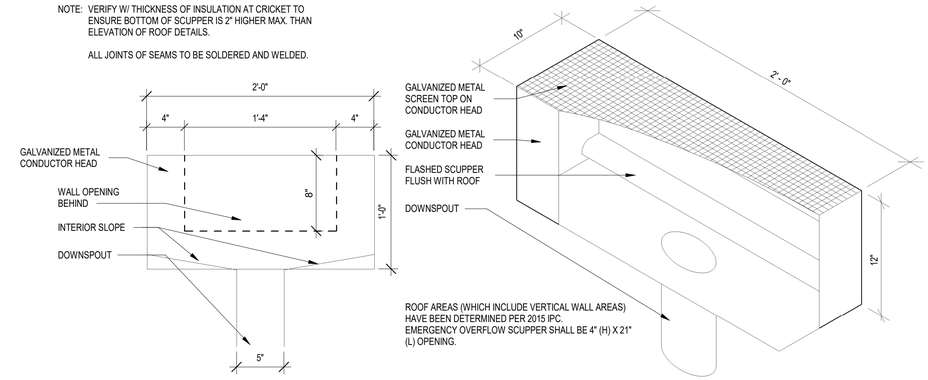

9 CONDUCTOR HEAD AND DOUNSPOUT
1 1/2" = 1'-0"

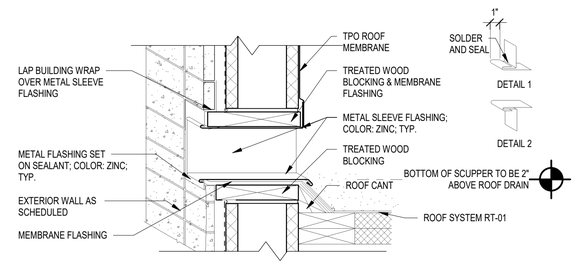

7 OVER-FLOW SCUPPER
1 1/2" = 1'-0"

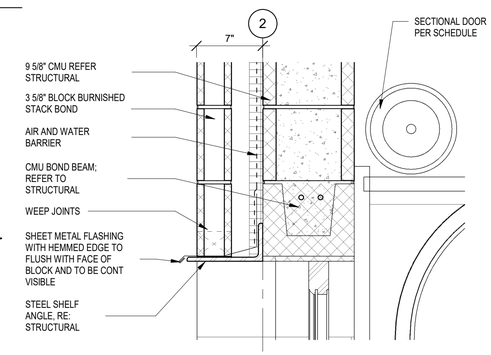

8 SECTION DETAIL - SECTIONAL DOOR
1 1/2" = 1'-0"

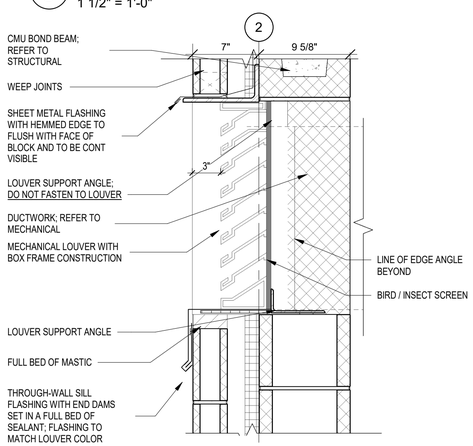

4 SECTION DETAIL - LOUVER
1 1/2" = 1'-0"

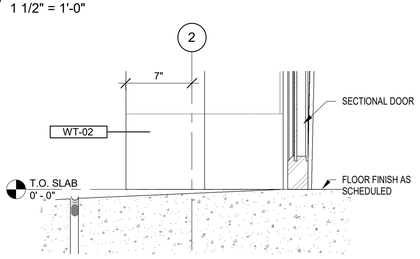

1 VEHICLE BAY SECTIONAL DOOR - DETAIL
1 1/2" = 1'-0"

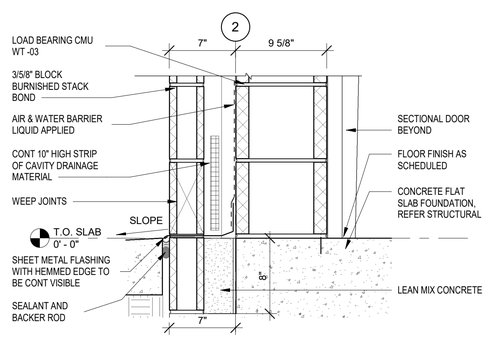

2 SECTION DETAIL - VEHICLE BAY
1 1/2" = 1'-0"

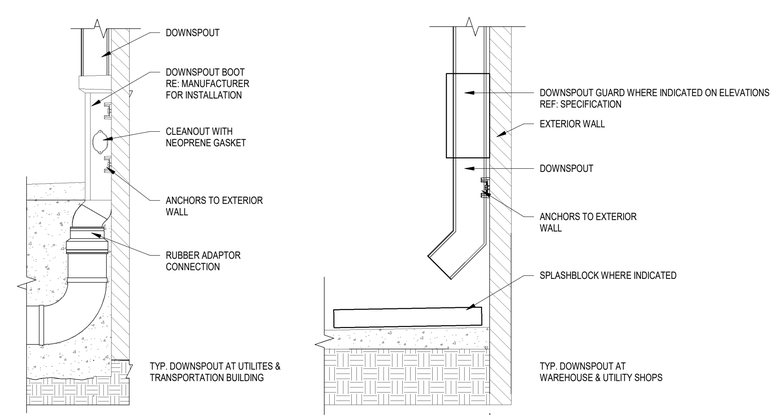

3 TYPICAL DOWNSPOUT DETAIL
1 1/2" = 1'-0"

Texas Department of Transportation

COPYRIGHT © 2021

Jacobs
1999 Bryan Street, Suite 1200
Dallas, Tx 75201
JACOBS ENGINEERING GROUP, INC
TEXAS REGISTRATION #2966

REGISTERED ARCHITECT STEVEN JOHN THERMER STATE OF TEXAS
04/21/2021

DALLAS DISTRICT (18)
COLLIN COUNTY
McKinney Area Engineering and Maintenance Facility
2205 TX-5, McKinney, TX 75069
PROJECT NO. 18-470420012

ISSUED: 2021.04.21
DRAWN BY: I. Eloualid
REVISIONS:

SECTION DETAILS (CONT.)

A7.6

THIS DRAWING CREATED FOR PRODUCTION ON 22"x34" SHEET SIZE. DO NOT SCALE PRINTS.

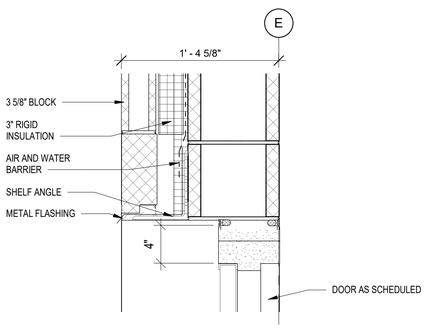

4 EXT - HM DOOR HEAD DETAIL
1 1/2" = 1'-0"

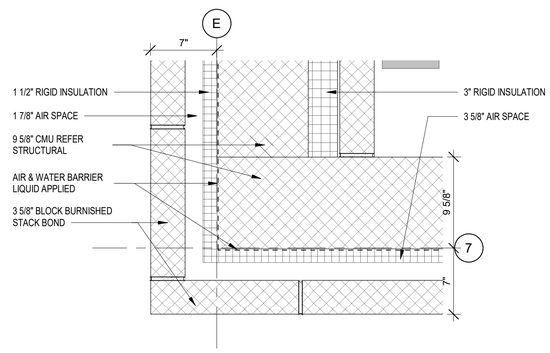

5 PLAN DETAIL
1 1/2" = 1'-0"

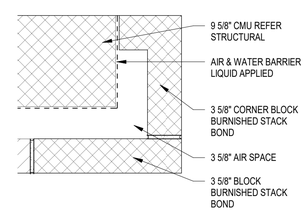

6 PLAN DETAIL
1 1/2" = 1'-0"

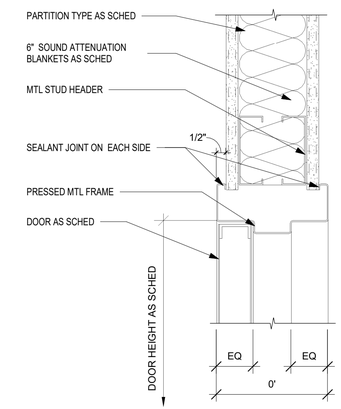

7 HEAD DETAIL - GWB
3" = 1'-0"

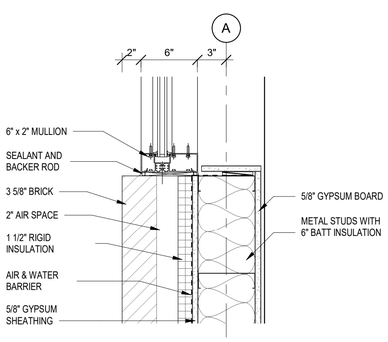

1 STOREFRONT SILL DETAIL
1 1/2" = 1'-0"

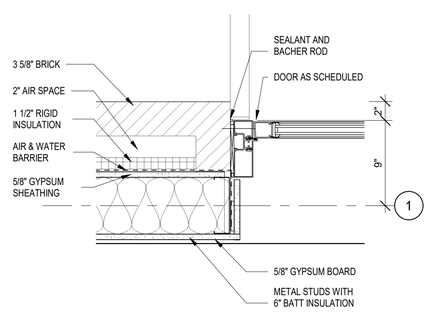

2 STOREFRONT DOOR JAMB DETAIL
1 1/2" = 1'-0"

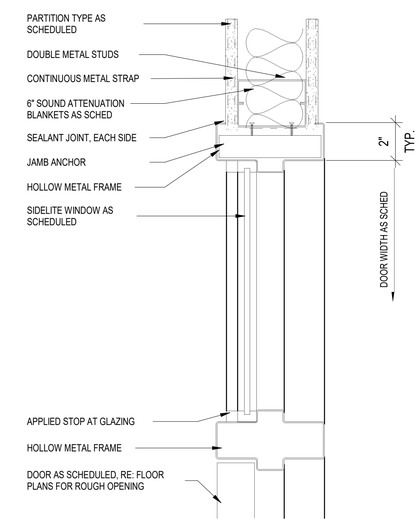

3 HM DOOR JAMB AND SIDELITE DETAIL
3" = 1'-0"

Texas Department of Transportation

COPYRIGHT © 2021

Jacobs
1999 Bryan Street, Suite 1200
Dallas, Tx 75201

JACOBS ENGINEERING GROUP, INC
TEXAS REGISTRATION #2966

REGISTERED ARCHITECT STEVEN JOHN THERMAN STATE OF TEXAS
04/21/2021

DALLAS DISTRICT (18)
COLLIN COUNTY
McKinney Area Engineering and Maintenance Facility
2205 TX-5, McKinney, TX 75069
PROJECT NO. 18-470420012

ISSUED: 2021.04.21
DRAWN BY: I. Eloualid
REVISIONS:

PLAN DETAILS
A7.7

THIS DRAWING CREATED FOR PRODUCTION ON 22"x34" SHEET SIZE. DO NOT SCALE PRINTS.

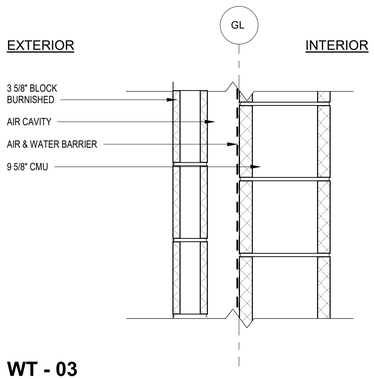

WT - 03
BLOCK VENEER ON LOAD BEARING CMU (UNINSULATED)

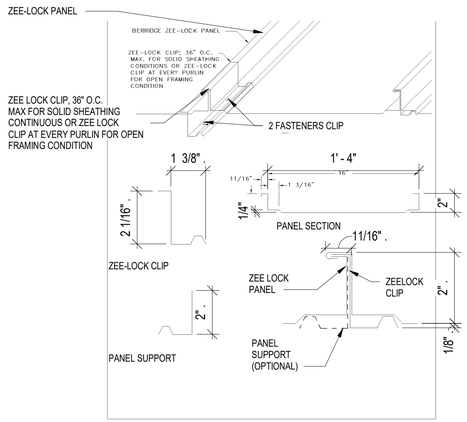

3 STANDING SEAM - ZEE LOCK PANEL
1 1/2" = 1'-0"

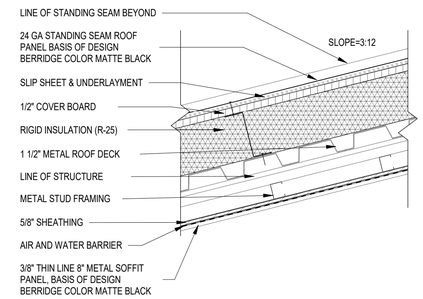

ST - 01
METAL PANEL SOFFIT

BASIS OF DESIGN AS FOLLOWS:

1. ALL BRICK VENEER TO BE ACME GARNET SMOOTH TEXTURE, MODULAR STANDARD SIZE, LAID IN STACK BOND CONFIGURATION EXCEPT AT SCREEN WALL LAID IN FLEMISH BOND. MORTAR COLOR TO BE SELECTED BY ARCHITECT FROM STANDARD COLOR RANGE
2. EXTERIOR CMU BLOCK VENEER TO BE NETTLETON CONCRETE INC BURNISHED FACE RAVEN, MODULAR STANDARD SIZE, LAID IN STACK BOND CONFIGURATION. MORTAR COLOR TO BE SELECTED BY ARCHITECT FROM STANDARD COLOR RANGE.
3. STANDING SEAM ROOF PANELS TO BE BERRIDGE MATTE BLACK KYNAR 500/HYLAT 5000
4. TPO MEMBRANE ROOF: WHITE
5. EXTERIOR ALUMINUM FRAMES TO MATCH COLOR OF THE STANDING SEAM MATTE BLACK
6. SOFFIT AND FASCIA PANELS TO MATCH COLOR MATTE BLACK
7. EXTERIOR LOUVERS TO MATCH COLOR OF THE SOFFIT AND STANDING SEAM MATTE BLACK
8. GUTTERS AND DOWNSPOUTS TO MATCH OF THE SOFFIT AND STANDING SEAM MATTE BLACK
9. GLASS TO BE SOLARBAN 90 (2) CLEAR + CLEAR GLASS INSULATING GLASS UNIT WITH SHGC 0.23
10. BRICK SHELF ANGLE COLOR TO MATCH THE COLOR OF THE BRICK
11. CMU SHELF ANGLE COLOR TO MATCH THE COLOR OF THE ALUMINUM FRAME SYSTEM
12. PREFORMED METAL COPING: OMG ROOFING PRODUCTS, SHADOWLINE COPING. COLOR TO MATCH MATTE BLACK

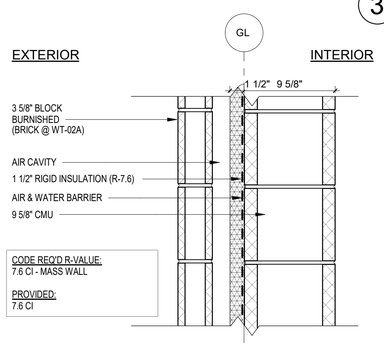

WT - 02
BLOCK VENEER ON LOAD BEARING CMU
(BRICK @ WT-02A)

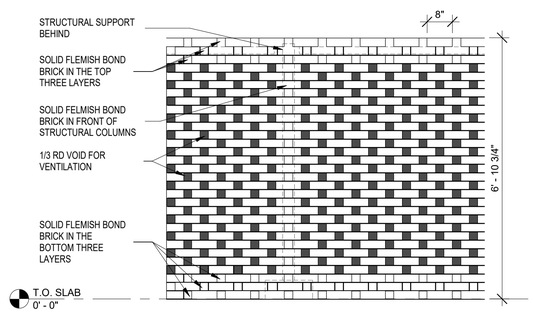

4 WT - 04 PERFORATED MASONRY SCREEN WALL PATTERN
1/2" = 1'-0"

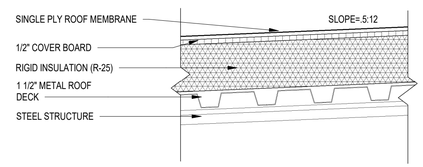

RT - 02
LOW-SLOPE TPO ROOF

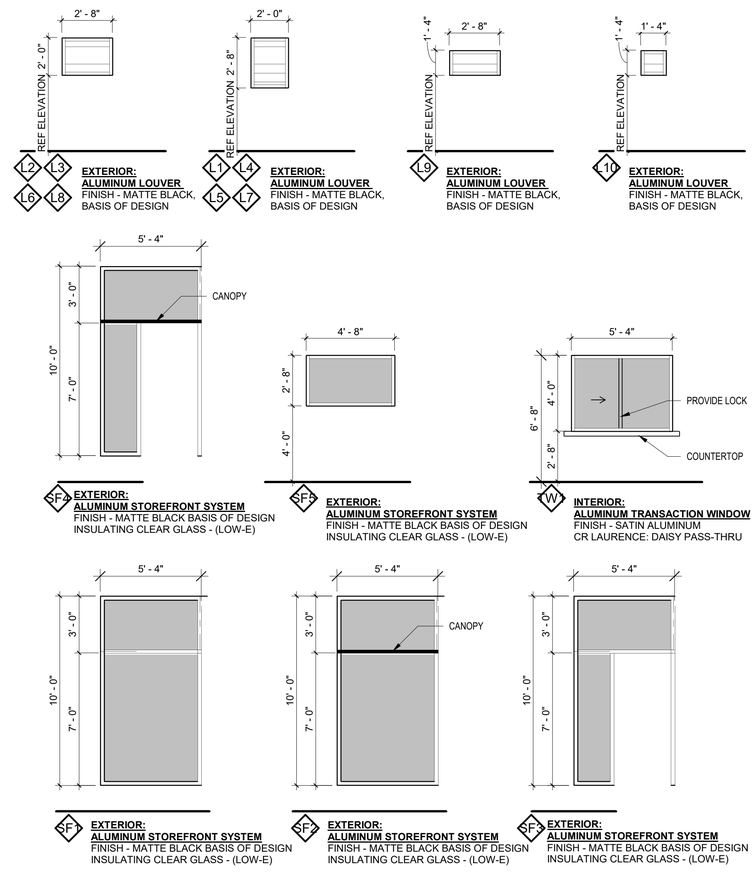

2 A8.1 **WINDOW / LOUVER TYPES**
1/4" = 1'-0"

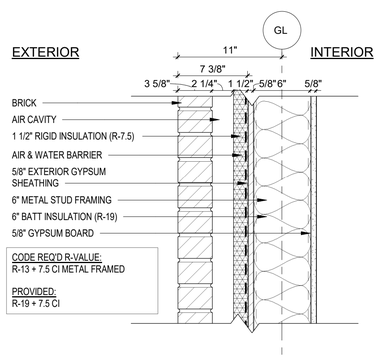

WT - 01
BRICK VENEER ON METAL STUD WALL

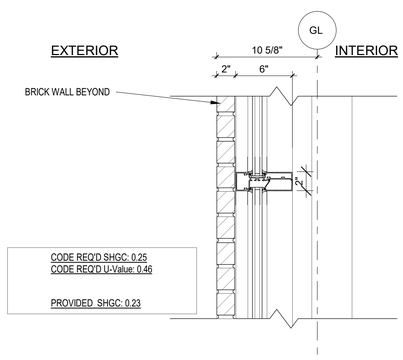

GT - 01
GLAZING SYSTEM

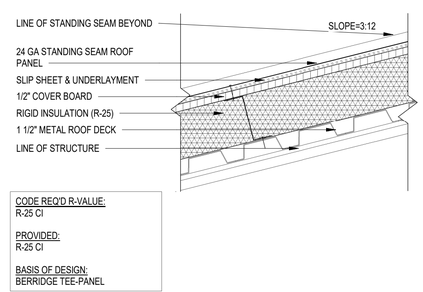

RT - 01
STANDING SEAM ROOF - BUILT UP METAL PANEL

1 EXTERIOR ASSEMBLIES
1 1/2" = 1'-0"

Texas Department of Transportation
COPYRIGHT © 2021

Jacobs
1999 Bryan Street, Suite 1200
Dallas, Tx 75201
JACOBS ENGINEERING GROUP, INC
TEXAS REGISTRATION #2966
REGISTERED ARCHITECT JOHN THOMAS STATE OF TEXAS
04/21/2021

DALLAS DISTRICT (18)
COLLIN COUNTY
McKinney Area Engineering and Maintenance Facility
2205 TX-5, McKinney, TX 75069
PROJECT NO. 18-470420012

ISSUED: 2021.04.21
DRAWN BY: I. Eloualid
REVISIONS:

EXTERIOR ASSEMBLIES
A8.1

THIS DRAWING CREATED FOR PRODUCTION ON 22"X34" SHEET SIZE. DO NOT SCALE PRINTS.

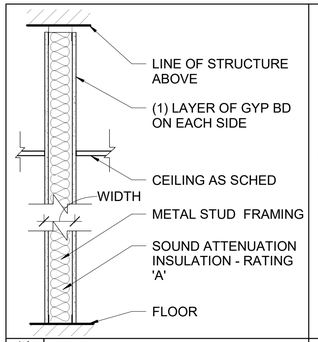

TYPE	A		
SIZE INDICATOR	IND	STUD SIZE	TOTAL WIDTH
	2	2 1/2"	3 3/4"
	3	3 5/8"	4 7/8"
	4	4"	5 1/4"
	6	6"	7 1/4"
	8	8"	9 1/4"
RATING		NO RATING - NO INSULATION	
	1	1 HR FIRE RATED - UL# U419	
	A	ACOUSTICAL - STC 45	
	S	SMOKE	

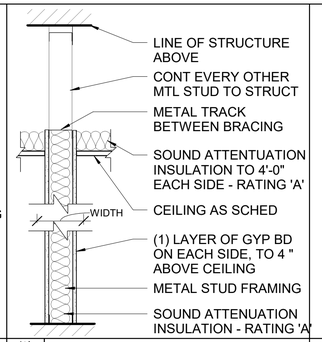

TYPE	D		
SIZE INDICATOR	IND	STUD SIZE	TOTAL WIDTH
	2	2 1/2"	3 3/4"
	3	3 5/8"	4 7/8"
	4	4"	5 1/4"
	6	6"	7 1/4"
	8	8"	9 1/4"
RATING		NO RATING - NO INSULATION	
	A	ACOUSTICAL	

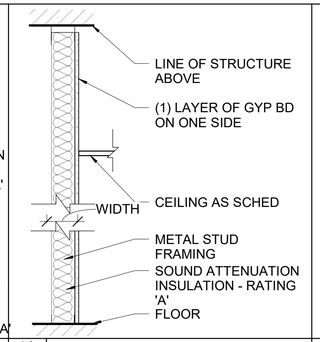

TYPE	E		
SIZE INDICATOR	IND	STUD SIZE	TOTAL WIDTH
	1	1 5/8"	2 1/4"
	2	2 1/2"	3 1/8"
	3	3 5/8"	4 1/4"
	4	4"	4 5/8"
	6	6"	6 5/8"
RATING		NO RATING - NO INSULATION	
	A	ACOUSTICAL	
	R	1-1/2" RIGID INSULATION W/ 5/8" CEMENT BOARD	

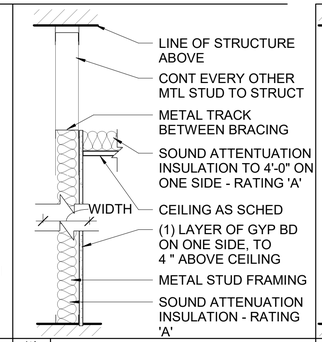

TYPE	F		
SIZE INDICATOR	IND	STUD SIZE	TOTAL WIDTH
	2	2 1/2"	3 1/8"
	3	3 5/8"	4 1/4"
	4	4"	4 5/8"
	6	6"	6 5/8"
	8	8"	8 5/8"
RATING		NO RATING - NO INSULATION	
	A	ACOUSTICAL	

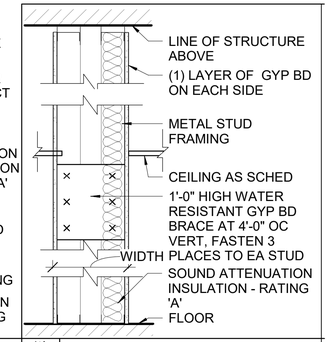

TYPE	H		
SIZE INDICATOR	IND	STUD SIZE	TOTAL WIDTH
	3	3 5/8"	1'-6"
	4	4"	2'-0"
	6	6"	2'-0"
RATING		NO RATING - NO INSULATION	
	1	1 HR FIRE RATED - UL# U420	
	A	ACOUSTICAL	
	S	SMOKE	

PARTITION TYPE KEY

FIRST DIGIT IS THE PARTITION 'TYPE' — A3-2 — SECOND DIGIT IS THE 'SIZE INDICATOR' — THIRD DIGIT IS THE PARTITION 'RATING'

GENERAL NOTES

A.	NOT ALL PARTITIONS ILLUSTRATED ARE USED. REF. FLOOR PLANS FOR WALL TYPES INDICATED.
B.	"LINE OF STRUCT" INDICATED FOR EACH PARTITION IS DIAGRAMMATIC ONLY AND DOES NOT INDICATE EXACT CONSTRUCTION CONDITIONS OR GEOMETRY. REFER TO DETAILS ON THIS SHEET FOR TYPICAL CONNECTION DETAILS.
C.	ALL NEW PARTITIONS ARE TYPE 'A3-A' UNLESS OTHERWISE NOTED.
D.	GYPSUM BOARD: 1. FIRE RESISTANT RATED PARTITIONS SHALL USE TYPE "X" FIRE RATED GYPSUM BOARD. 2. PARTITIONS IN HIGH MOISTURE AREAS SHALL USE MOISTURE RESISTANT GYPSUM BOARD WHICH INCLUDE TOILET ROOM(S), LOCKER ROOM(S),JANITOR CLOSET(S), MECHANICAL ROOM(S), AND WITHIN 4'-0" OF WATER FOUNTAIN. 3. PARTITIONS BEHIND TOILETS, FIXTURES AND WITHIN SHOWER AREAS SHALL USE CEMENT BOARD WITH A MOISTURE BARRIER.
E.	SEALANT: 1. FIRE RESISTANT RATED PARTITIONS SHALL USE FIRE STOP SEALANT SYSTEM. 2. NON - RATED PARTITIONS AND SMOKE RATED PARTITIONS SHALL USE ACOUSTICAL SEALANT.
F.	INSULATION - HEAD CONDITION AT STRUCTURE ABOVE: 1. FIRE RATED RESISTANT PARTITIONS SHALL USE FIRE SAFING INSULATION. 2. NON - RATED PARTITIONS SHALL USE SOUND ATTENUATION BLANKET.
G.	FIRE AND / OR SMOKE RESISTANT RATINGS ARE TO SURROUND ALL OPENINGS IN RATED PARTITIONS.
H.	FIRE AND / OR SMOKE RESISTANT PARTITIONS SHALL EXTEND TO INSIDE FACE OF EXTERIOR SHEATHING, DECKS, AND INCLUDING EXTENSIONS THROUGH SOFFITS.
I.	EACH PARTITION INDICATED TO BE FIRE AND/OR SMOKE RESISTANT SHALL BE IDENTIFIED AS SUCH WITH A LABEL ABOVE THE CEILING ON EACH SEGMENT OF WALL AT A MIN OF 8'-0" O.C.
J.	STC RATING IS BASED ON THE USE OF A 3 5/8" METAL STUD OR GREATER.
K.	INSTALL HORIZONTAL STUD FRAMING BRACING AT 4'- 0" ON CENTER.
L.	CMU INFILL WALLS ARE TO BE A THICKNESS TO MATCH EXISTING ADJACENT WALL.

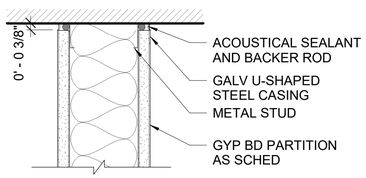

4 A8.2 TYP WALL-WALL CONNECTION

3" = 1'-0"

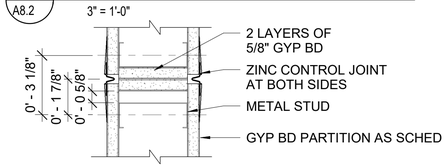

3 A8.2 TYP 1 HR RATED CONTROL JOINT

3" = 1'-0"

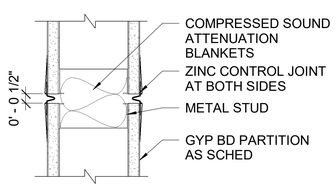

2 A8.2 TYP CONTROL JOINT

3" = 1'-0"

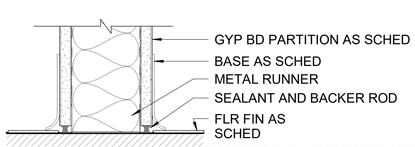

1 A8.2 TYP BOTTOM OF WALL CONNECTION

3" = 1'-0"

DO NOT ATTACH GYP BD OR STUDS TO TOP TRACK

REFER TO GENERAL NOTES FOR SEALANT AND INSULATION TYPES

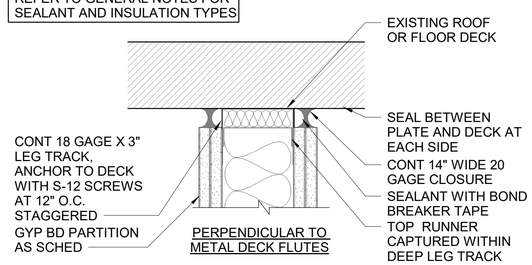

5 A8.2 TYP TOP OF GYP BD WALL CONNECTION

3" = 1'-0"

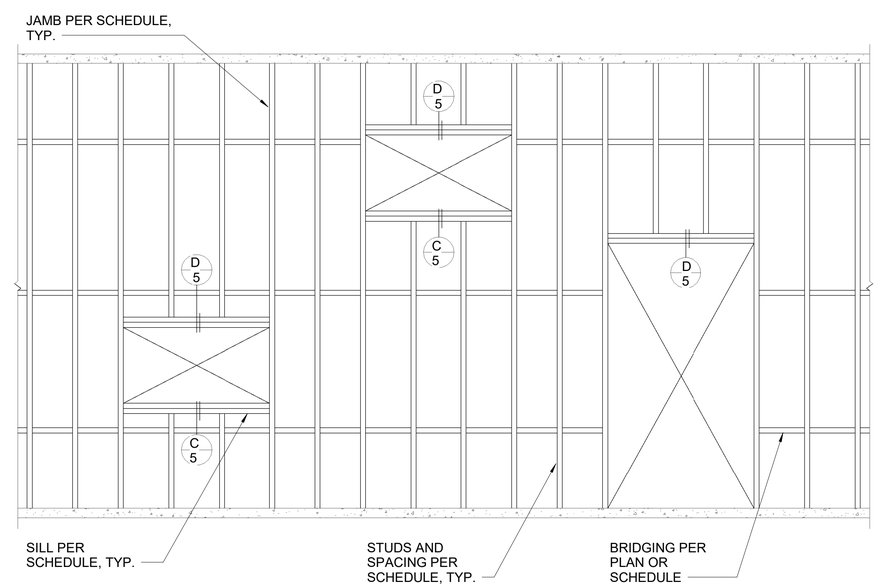

6 A8.2 WALL ELEVATION

1/2" = 1'-0"

Texas Department of Transportation

COPYRIGHT © 2021

Jacobs
1999 Bryan Street, Suite 1200
Dallas, Tx 75201
JACOBS ENGINEERING GROUP, INC
TEXAS REGISTRATION #2966

REGISTERED ARCHITECT STEVEN JOHN THERMER STATE OF TEXAS
04/21/2021

DALLAS DISTRICT (18)
COLLIN COUNTY
McKinney Area Engineering and Maintenance Facility
2205 TX-5, McKinney, TX 75069
PROJECT NO. 18-470420012

ISSUED: 2021.04.21
DRAWN BY: I. Eloualid
REVISIONS:

PARTITION TYPES

A8.2

THIS DRAWING CREATED FOR PRODUCTION ON 22"x34" SHEET SIZE. DO NOT SCALE PRINTS.

DOOR SCHEDULE

DOOR NUMBER	SIZE W	SIZE H	SIZE T	DOOR TYPE	DOOR MAT'L.	FRAME TYPE	FRAME MAT'L.	HARDWARE SET	FIRE RATING	REMARKS
100A	3' - 0"	7' - 0"	0' - 1 3/4"	D3	AL/GL	STF	AL	C715A		EXTERIOR STOREFRONT
100B	3' - 0"	7' - 0"	0' - 1 3/4"	D6	WD/GL	F5	HM	C701		
100C	3' - 0"	7' - 0"	0' - 1 3/4"	D6	WD/GL	F5	HM	C701		
101A	6' - 0"	7' - 0"	0' - 1 3/4"	D2	WD	F2	HM	210		
103	3' - 0"	7' - 0"	0' - 1 3/4"	D6	WD/GL	F5	HM	731		
104	3' - 0"	7' - 11"	0' - 1 3/4"	D5	WD	F2	HM	811T		
105	3' - 0"	7' - 0"	0' - 1 3/4"	D1	WD	F1	AL	701		
105A	3' - 0"	8' - 0"	0' - 1 3/4"	D5	WD	F2	AL	103T		
105B	3' - 0"	8' - 0"	0' - 1 3/4"	D5	WD	F2	AL	103T		
105C	3' - 0"	8' - 0"	0' - 1 3/4"	D5	WD	F2	AL	103T		
106A	3' - 0"	7' - 0"	0' - 1 3/4"	D3	AL/GL	STF	AL	C715A		EXTERIOR STOREFRONT
106B	3' - 0"	7' - 0"	0' - 1 3/4"	D6	WD/GL	F5	HM	701		
106C	3' - 0"	7' - 0"	0' - 1 3/4"	D6	WD/GL	F5	HM	701		
107	3' - 0"	7' - 0"	0' - 1 3/4"	D1	WD	F2	HM	701		
107A	3' - 6"	7' - 0"	0' - 1 3/4"	D5	HM	F2	HM	201CW		GASKETING AND DOOR BOTTOM FOR PLENUM DOOR
107B	6' - 0"	7' - 0"	0' - 1 3/4"	D2	WD	F2	HM	410S		
107C	3' - 0"	7' - 0"	0' - 1 3/4"	D3	AL/GL	STF	AL	C715A		EXTERIOR STOREFRONT
107D	3' - 0"	7' - 0"	0' - 1 3/4"	D3	AL/GL	STF	AL	C715A		EXTERIOR STOREFRONT
108A	6' - 0"	7' - 10"	0' - 1 3/4"	D3-2	AL/GL	F1	AL	810A		
108B	6' - 0"	7' - 10"	0' - 1 3/4"	D4	GL	F1	AL	001		
109	3' - 0"	7' - 0"	0' - 1 3/4"	D1	WD	F2	HM	801		
110	3' - 0"	7' - 0"	0' - 1 3/4"	D1	WD	F2	HM	201		
111	3' - 0"	7' - 0"	0' - 1 3/4"	D1	WD	F2	HM	801		
112	3' - 0"	7' - 0"	0' - 1 3/4"	D1	WD	F2	HM	C207		
113	3' - 0"	7' - 0"	0' - 1 3/4"	D6	WD/GL	F5	HM	701		
113A	3' - 0"	8' - 0"	0' - 1 3/4"	D5	WD	F5	HM	503		
113B	3' - 0"	8' - 0"	0' - 1 3/4"	D5	WD	F2	AL	103T		
113C	3' - 0"	8' - 0"	0' - 1 3/4"	D5	WD	F2	AL	103T		
113D	3' - 0"	8' - 0"	0' - 1 3/4"	D5	WD	F2	AL	103T		
113E	3' - 0"	8' - 0"	0' - 1 3/4"	D5	WD	F2	AL	103T		
114A	3' - 0"	7' - 0"	0' - 1 3/4"	D3	AL/GL	STF	AL	C715A		EXTERIOR STOREFRONT
114B	3' - 0"	7' - 0"	0' - 1 3/4"	D3	AL/GL	STF	AL	C715A		EXTERIOR STOREFRONT
115	3' - 6"	7' - 0"	0' - 1 3/4"	D5	HM	F2	HM	201W		GASKETING AND DOOR BOTTOM FOR PLENUM DOOR
116	3' - 0"	7' - 0"	0' - 1 3/4"	D1	HM	F2	HM	C201		
117	3' - 6"	7' - 0"	0' - 1 3/4"	D5	HM	F2	HM	201		HW #201 TO BE MODIFED TO INCLUDE EXIT DEVICE AT THIS OPNG
118	3' - 0"	7' - 0"	0' - 1 3/4"	D1	HM	F2	HM	801		
119	3' - 0"	7' - 0"	0' - 1 3/4"	D1	HM	F2	HM	801		
120	6' - 0"	8' - 0"	0' - 1 3/4"	D2	HM	F3	HM	214T	-	
121A	3' - 0"	7' - 0"	0' - 1 3/4"	D6	HM/GL	F5	HM	731		
121B	3' - 0"	8' - 0"	0' - 1 3/4"	D6	HM	F3	HM	501T	180 MIN	
121C	5' - 0"	7' - 0"	0' - 1 3/4"	D2	HM	F6	HM	212		LOUVER ABOVE DOOR, RE: MECH
122	3' - 0"	7' - 0"	0' - 1 3/4"	D6	HM/GL	F5	HM	507		
122A	3' - 0"	7' - 0"	0' - 1 3/4"	D6	HM/GL	F5	HM	407		
122B	3' - 0"	7' - 0"	0' - 1 3/4"	D3	AL/GL	STF	AL	C715A		EXTERIOR STOREFRONT
123	3' - 0"	7' - 0"	0' - 1 3/4"	D6	HM/GL	F5	HM	507		
123A	3' - 0"	7' - 0"	0' - 1 3/4"	D1	HM	F2	HM	407		
124	6' - 0"	8' - 0"	0' - 1 3/4"	D2	HM	F3	HM	214T	-	
125	3' - 0"	7' - 0"	0' - 1 3/4"	D1	HM	F2	HM	207		
126A	6' - 0"	8' - 0"	0' - 1 3/4"	D2	HM	F3	HM	C214T	-	EXTRA HEAVY DUTY GROUT SOLID
126B	3' - 0"	8' - 0"	0' - 1 3/4"	D6	HM	F3	HM	C207GT	180 MIN	EXTRA HEAVY DUTY GROUT SOLID
127	3' - 0"	7' - 0"	0' - 1 3/4"	D6	HM/GL	F5	HM	103T		
128A	14' - 0"	14' - 0"	0' - 2 1/8"	D8	AL/GL			001		
128B	14' - 0"	14' - 0"	0' - 2 1/8"	D8	AL/GL			001		
128C	14' - 0"	14' - 0"	0' - 2 1/8"	D8	AL/GL			001		
128D	14' - 0"	14' - 0"	0' - 2 1/8"	D8	AL/GL			001		
128E	3' - 0"	8' - 0"	0' - 1 3/4"	D1	HM	F3	HM	C715T		
129	8' - 0"	10' - 0"	0' - 1"	D7	STL			001		
130A	8' - 0"	10' - 0"	0' - 1"	D7	STL			001		
130B	3' - 0"	8' - 0"	0' - 1 3/4"	D1	HM	F3	HM	205T		
131	3' - 0"	8' - 0"	0' - 1 3/4"	D1	HM	F3	HM	205T		

NOTE: SIGNAGE TO BE PROVIDED AT EACH DOOR PER SPECIFICATION 10 14 23.16 ROOM IDENTIFICATION PANEL SIGNAGE

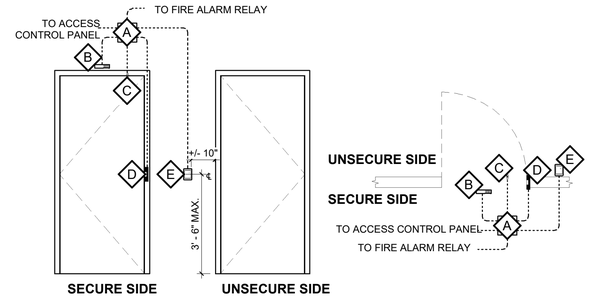

4 DOOR SECURITY
3/8" = 1'-0"

SECURITY NOTES

1. PROVIDE CYLINDERS TO MATCH GRAND MASTER KEY SYSTEM FOR THIS FACILITY.
2. IF NO GRAND MASTER KEY SYSTEM EXISTS FOR THIS FACILITY, PROVIDE THE BEST PREMIUM LOCKING SYSTEM.
3. CORES & KEYS SHALL BE FURNISHED BY OWNER

KEYED SECURITY NOTES

A SECURITY J-BOX
4-11/16" x 4-11/16" x 2-1/8" BOX W/ COVER

B REQUEST-TO-EXIT MOTION
BOSCH DS160

C DOOR MONITORING SWITCH
RECESSED: 1078
SURFACE MOUNT (ONLY W/ PRIOR APPORVAL):
2507AD OR GRI-29A

D ELECTRIC STRIKE
HES 4500C-630 FAIL SECURE

E CARD READER
HID RP40-H (FOR WALL MOUNT)
HID RP10-H (FOR NARROW MOUNT)

DOOR SCHEDULE NOTES

1. REFER TO SPECIFICATIONS FOR ADDITIONAL INFORMATION.
2. HARDWARE SHALL MEET REQUIREMENTS OF ANSI A117.1.
3. RAISED THRESHOLDS AT DOORWAYS SHALL NOT EXCEED ½-IN. FLOOR LEVEL CHANGES GREATER THAN ¼-IN. AT DOORWAY SHALL BE BEVELED WITH A SLOPE NOT GREATER THAN (1) UNIT VERTICAL AND (2) UNITS HORIZONTAL.
4. EGRESS DOORS SHALL BE READILY OPERABLE FROM THE EGRESS SIDE WITHOUT USE OF A KEY OR SPECIAL KNOWLEDGE OR EFFORT & SHALL UNLOCK IN ONE MOTION.
5. ACCESSIBLE DOORS SHALL BE OPERABLE W/ HARDWARE DESIGNED TO PROVIDE PASSAGE WITHOUT REQUIRING THE ABILITY TO GRASP THE OPENING HARDWARE. UNLATCHING OF EGRESS DOORS SHALL NOT REQUIRE MORE THAN (1) OPERATION.
6. HARDWARE FOR ACCESSIBLE DOOR PASSAGE SHALL BE CENTERED BETWEEN 30-IN. TO 44-IN. ABOVE FINISHED FLOOR.
7. DOOR OPENING FORCES SHALL BE AS ALLOWABLE BY T.A.S. 2012

HARDWARE LEGEND

HW-X REF. SPECIFICATION 08 71 00

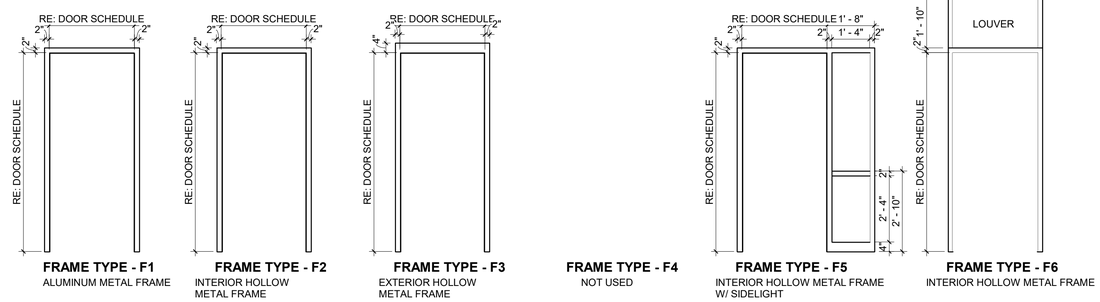

2 FRAME TYPES
3/8" = 1'-0"

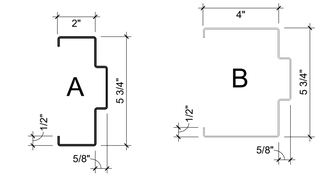

3 FRAME PROFILES
3" = 1'-0"

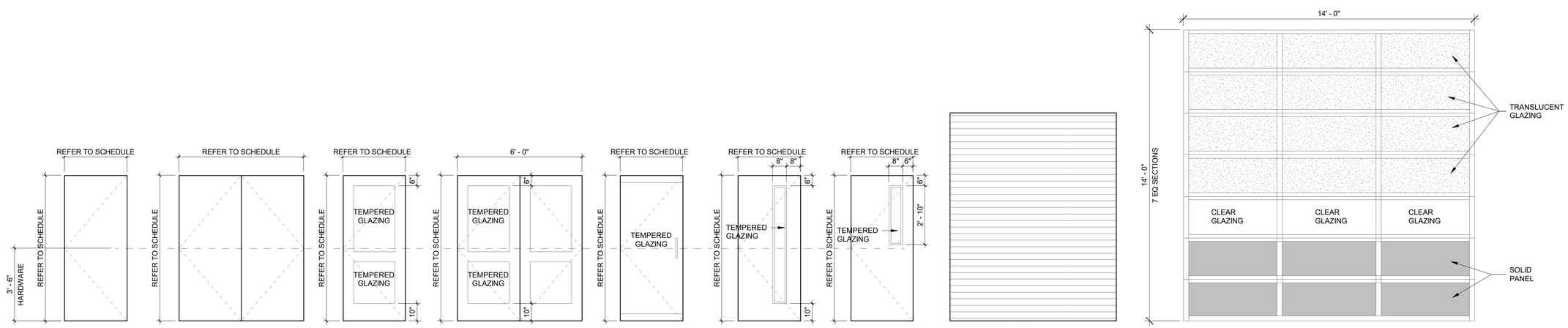

1 DOOR TYPES
3/8" = 1'-0"

Texas Department of Transportation

COPYRIGHT © 2021

Jacobs
1999 Bryan Street, Suite 1200
Dallas, Tx 75201
JACOBS ENGINEERING GROUP, INC
TEXAS REGISTRATION #2966

REGISTERED ARCHITECT STEVEN JOHN THERMER STATE OF TEXAS
04/21/2021

DALLAS DISTRICT (18)
COLLIN COUNTY
McKinney Area Engineering and Maintenance Facility
2205 TX-5, McKinney, TX 75069
PROJECT NO. 18-470420012

ISSUED: 2021.04.21
DRAWN BY: I. Eloualid
REVISIONS:

DOOR TYPES & SCHEDULE
A8.3

THIS DRAWING CREATED FOR PRODUCTION ON 22"x34" SHEET SIZE. DO NOT SCALE PRINTS.

FINISH LEGEND

ITEM CODE	DESCRIPTION	MANUFACTURER	MODEL	COLOR	SIZE	CONTACT	NOTES	LOCATION
FLOORING								
CR-1	POLISHED CONCRETE	TBD	CLASS D MOST EXPOSED AGGREGATE EXPOSURE	TBD,LEVEL 2 SATIN HONED POLISH				
EFM-1	ENTRANCE MAT	MOHAWK	FIRST STEP II	IRON ORE 983	TBD		TAPERED EDGE TRANSITION STRIPS AS REQUIRED. REF: SPECIFICATIONS	
FT-1	PORCELAIN TILE	DALTILE	IRONCRAFT	CASPER GREY IC12	12 in x 24 in		FIELD TILE	
RF-1	RESILIENT FLOORING	MOHAWK	SAKIORI HEMSTICH	LOWVELD	9.25 in x 59.25 in			
RF-2	RESILIENT FLOORING	MOHAWK	SAKIORI LINKED	MOLA	9.25 in x 59.25 in			
RF-3	RESILIENT FLOORING	MOHAWK	SAKIORI LINKED	SUKUMO	9.25 in x 59.25 in		HERRINGBONE INSTALLATION.	
RF-4	FLOORING	MOHAWK	LIVING LOCAL	TWO TONE	8 in x 48 in			
SC-1	SEALED CONCRETE						WATER-BASED CONCRETE FLOOR SEALER	
SC-2	SEALED CONCRETE						SOLVENT-BASED CONCRETE FLOOR SEALER	
BASE								
RB-1	RUBBER BASE	ROPPE	PINACLE	CHARCOAL	ROLLED GOODS 4" HIGH		STANDARD TOE AT HARD SURFACE FLOORING; STRAIGHT BASE AT CARPET	
TB-1	TILE BASE COVE	DALTILE	IRONCRAFT	CASPER GREY IC12	6 in x 12 in		UNPOLISHED	
WALLS								
AWP-1	ACOUSTICAL WALL PANEL	MDC	ZINTRA,ETCH	PATTERN: TESSALATE, COLOR PEWTER	SEE ELEVATION			
FRP-1	FIBERGLASS REINFORCED PANEL	MARLITE	STANDARD FRP	P-100 WHITE, PEBBLED	4'X8' PANELS			
PT-1	PAINT	SHERWIN WILLIAMS	PROMAR 200; EGGSHELL	EXTRA WHITE SW7006			FIELD COLOR: WALL.PROVIDE EPOXY PAINT BEHIND ALL COUNTERTOPS AND IN WET LOCATIONS	
PT-2	PAINT	SHERWIN WILLIAMS	PROMAR 200; EGGSHELL	PEPPERCORN 236-37			ACCENT WALL COLOR.PROVIDE EPOXY PAINT BEHIND ALL COUNTERTOPS AND IN WET LOCATIONS	
PT-3	PAINT	SHERWIN WILLIAMS	PROMAR 200; SEMIGLOSS	DOVETAIL SW7018			DOORS AND FRAMES	
PT-4	PAINT	SHERWIN WILLIAMS	PROMAR 200; EGGSHELL	LOYAL BLUE			ACCENT WALL COLOR	
PT-5	PAINT	SHERWIN WILLIAMS	PROMAR 200; EGGSHELL	PERFECT PERIWINKLE			ACCENT WALL COLOR	
WC-1	WALLCOVERING	MAHARAM	SYSTEM	BLACK 399600-001			ACCENT WALL COLOR	
WC-2	C/S ACROVYN WALL COVERING	C/S ACROVYN	C/S ACROVYN WALL COVERING	WHITE	48" SHEET X 0.060" THICK		INSTALL FF TO 4'-0" A.F.F. PROVIDE CONTINUOUS WAINSCOAT TRIM	
WT-1	WALL TILE	DALTILE	IRONCRAFT	WHITE IC11	12 in x 24 in		UNPOLISHED	
WT-2	WALL TILE	DALTILE	MYTHOLOGY	TITAN MY96	2X5 PICKET MOSAIC		BACKSPLASH AT BREAKROOM	
CEILINGS								
ACT-1	ACOUSTICAL CEIILING TILE	ARMSTRONG	TILE: CALLA	WHITE	24 in X 24 in		GRID: 9/16" EXPOSED WHITE	
OTS-1	PAINTED OPEN STRUCTURE	SHERWIN WILLIAMS	PROMAR 200; FLAT	EXTRA WHITE SW7006				
WAC-1	ACOUSTICAL CEILING LINEAR PANELS	ARMSTRONG	BLADES	SMOKE				
MISCELLANEOUS								
CG	CORNER GUARD	KOROSEAL	KOROSEAL SURFACE MOUNTED VINYL	MATCH WALL PAINT COLOR	2"LEG X 48" TALL			
CG-2	CORNER GUARD		STAINLESS STEEL		2"X8' TALL			
EC	END CAP	KOROSEAL	KOROSEAL SURFACE MOUNTED VINYL	MATCH WALL PAINT COLOR	2"LEG X 48" TALL			
FL-1	GLASS FILM	3M	PRIVACY FILM	ILLUMINA SILKY -W			ONLY ON HUDDLE ROOM AND OFFICE GLASS WALLS	
GT-1	GROUT	MAPEI	ULTRACOLOR PLUS FA	01 ALABASTER			FOR WT-1	
GT-2	GROUT	MAPEI	ULTRACOLOR PLUS FA	77 FROST			FOR WT-2	
GT-3	GROUT	MAPEI	ULTRACOLOR PLUS FA	103 COBBLESTONE			FOR FT-1	
PL-1	PLASTIC LAMINATE	NEVAMAR	PIONITE	WALNUT GROVE WW050-SD			MILLWORK	
SS-1	SOLID SURFACE	WILSONART	SOLID SURFACE	MORNING ICE9204CE				
TC-1	TOILET COMPARTMENT	SCANTRON PRODUCTS	HINEY HIDERS	STAINLESS ROTARY BRUSH			FLOOR MOUNTED, STAINLESS STEEL SUPPORT BRACKETS AND ANCHORS.	
WD-1	MANUAL WINDOW SHADES	SWF CONTRACT	E300	C1515 SMOKE PLATINUM			GC TO VERIFY DIMENSIONS.WINDOWS IN ROOM 100, 101, 105, 105C, 107, 113, 122	

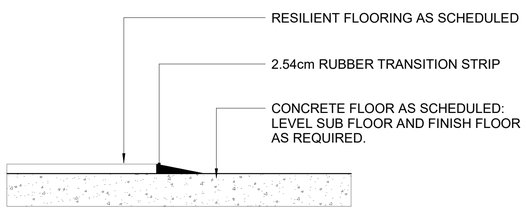

1 RESILIENT FLOORING TO CONCRETE/EXPOXY
1/4" = 1'-0"

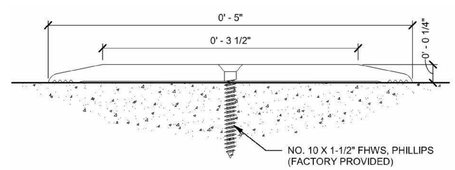

3 METAL THRESHOLD
1 1/2" = 1'-0"

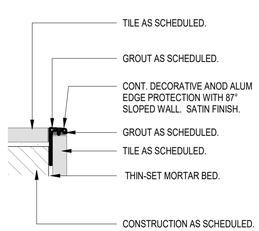

2 TILE TRIM AT CORNER
6" = 1'-0"

Texas Department of Transportation
COPYRIGHT © 2021

Jacobs
1999 Bryan Street, Suite 1200
Dallas, Tx 75201
JACOBS ENGINEERING GROUP, INC
TEXAS REGISTRATION #2966

REGISTERED ARCHITECT JOHN THOMAS STATE OF TEXAS
04/21/2021

DALLAS DISTRICT (18)
COLLIN COUNTY
McKinney Area Engineering and Maintenance Facility
2205 TX-5, McKinney, TX 75069
PROJECT NO. 18-47042001 2

ISSUED: 2021.04.21
DRAWN BY: I. Eloualid
REVISIONS:

FINISH LEGEND & DETAILS
A9.1

THIS DRAWING CREATED FOR PRODUCTION ON 22"x34" SHEET SIZE. DO NOT SCALE PRINTS.

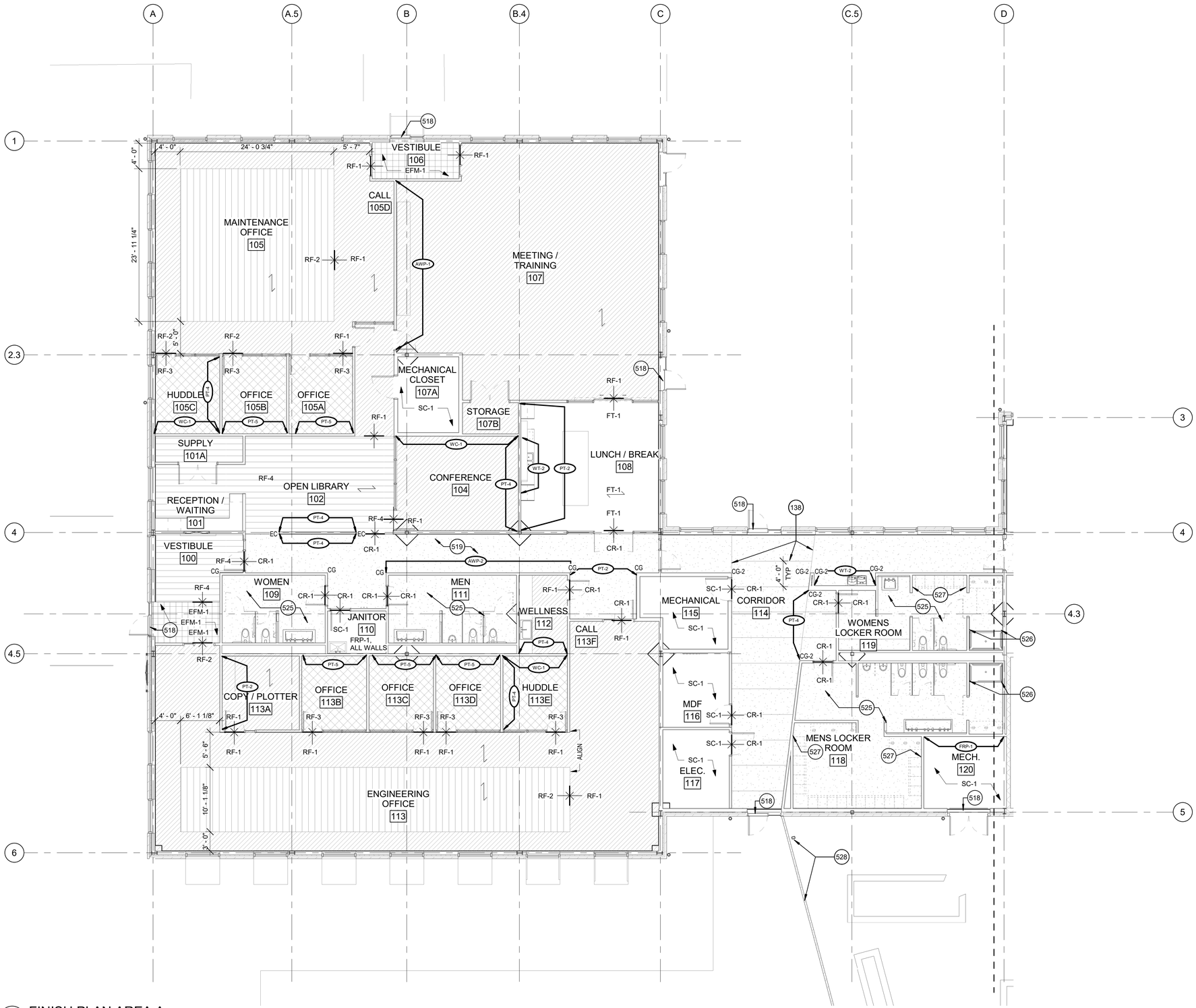

1 FINISH PLAN AREA A
1/8" = 1'-0"

KEYPLAN

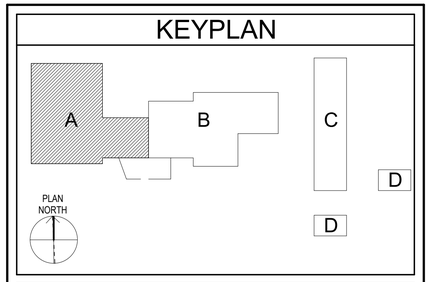

SCALES

1/8" = 1'-0"

8' 6' 4' 2' 0' 4' 8' 16'

FINISH KEY LEGEND

- SC-1 / SC-2 REF: PLAN
- RF-1
- RF-2
- RF-3
- RF-4
- XX-X WALL FINISH TAG
- FLOOR FINISH TRANSITION
- FLOORING INSTALL DIRECTION
- CR-1

KEY NOTES

138	SAWCUT JOINTS, TYP.
518	PROVIDE METAL THRESHOLD. REFER TO DETAIL 3/A9.1.
519	FINAL POLISHED CONCRETE FLOOR FINISHED TO BE REFERENCED IN SPEC SECTION.
525	TILE ALL WALLS FLOOR TO CEILING IN RESTROOM
526	TERMINATE TILE AT SHOWER, TYPICAL
527	TERMINATE TILE AT LOCKER, TYPICAL
528	PAINT STEEL SUPPORT FOR SCREEN WALL, TYPICAL

FINISH PLAN NOTES

1. UNLESS OTHERWISE NOTED, NEW WALL BASE TO BE RB-1.
2. UNLESS OTHERWISE NOTED, NEW GWB WALL SURFACES TO BE FINISHED PT-1, EGGSHELL FINISH.
3. UNLESS OTHERWISE NOTED, CENTER RESILIENT TILE WITHIN ROOM.
4. UNLESS OTHERWISE NOTED, ALL GWB CEILINGS AND SOFFITS TO BE PAINTED PT-1 FLAT FINISH.
5. SUBMIT DRAWING FOR BORDER IN ROOM 105 AND 113. TO BE COORDINATED WITH FINAL FURNITURE LAYOUT FROM OWNER.

Texas Department of Transportation

COPYRIGHT © 2021

Jacobs
1999 Bryan Street, Suite 1200
Dallas, Tx 75201
JACOBS ENGINEERING GROUP, INC
TEXAS REGISTRATION #2966

REGISTERED ARCHITECT STEVEN JOHN TREMME 9414 STATE OF TEXAS
04/21/2021

DALLAS DISTRICT (18)
COLLIN COUNTY
McKinney Area Engineering and Maintenance Facility
2205 TX-5, McKinney, TX 75069
PROJECT NO. 18-470420012

ISSUED: 2021.04.21
DRAWN BY: I. Eloualid
REVISIONS:

FINISH PLAN AREA A

A9.2

THIS DRAWING CREATED FOR PRODUCTION ON 22"x34" SHEET SIZE. DO NOT SCALE PRINTS.

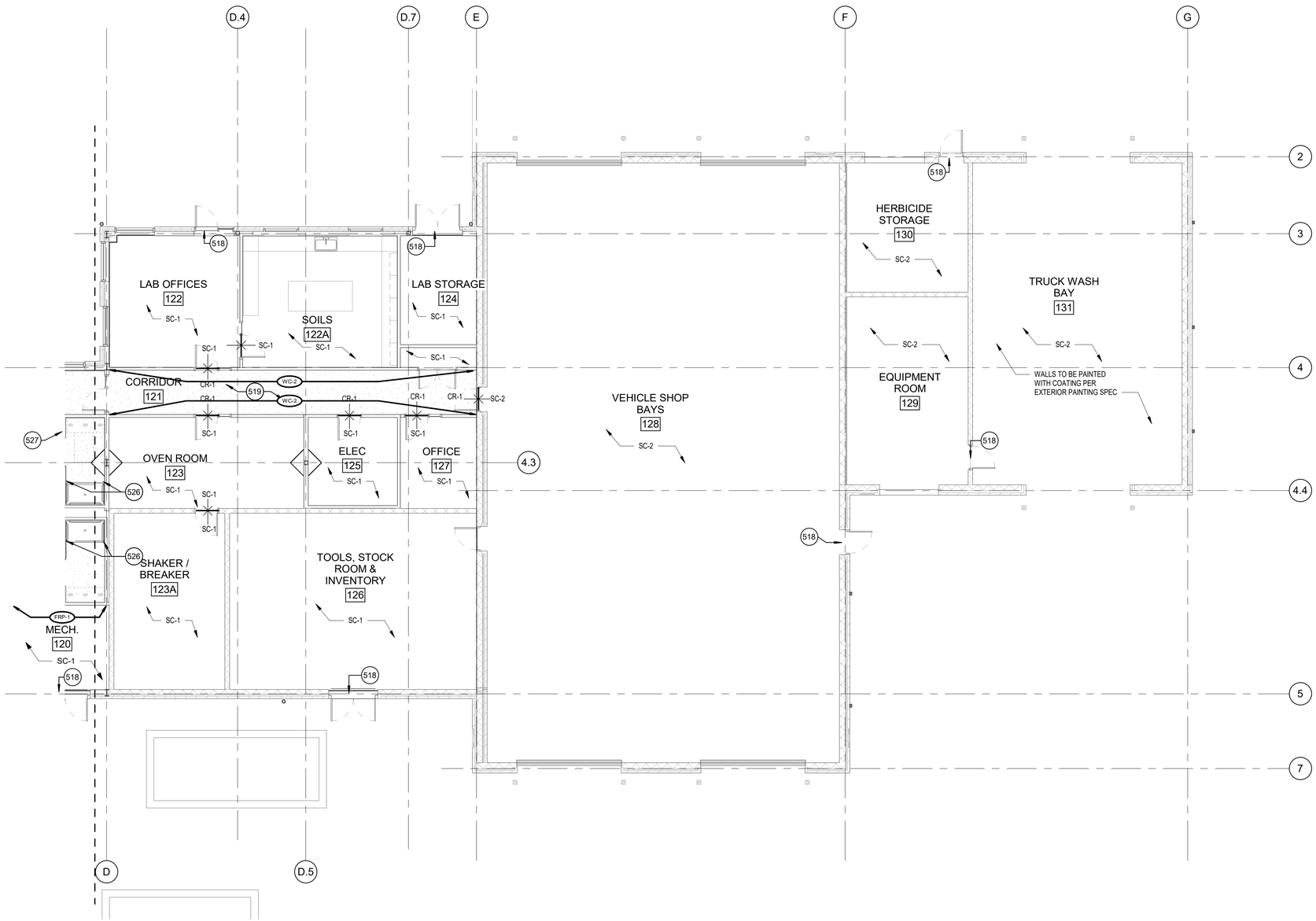

1 FINISH PLAN AREA B

1/8" = 1'-0"

KEYPLAN

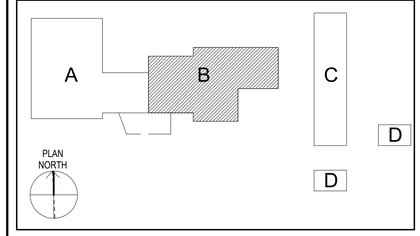

SCALES

1/8" = 1'-0"

8' 6' 4' 2' 0' 4' 8' 16'

FINISH KEY LEGEND

SC-1 / SC-2
REF: PLAN

XX-X WALL FINISH TAG

FLOOR FINISH TRANSITION

FLOORING INSTALL DIRECTION

FINISH PLAN NOTES

1. UNLESS OTHERWISE NOTED, NEW WALL BASE TO BE RB-1.
2. UNLESS OTHERWISE NOTED, NEW GWB WALL SURFACES TO BE FINISHED PT-1, EGGSHELL FINISH.
3. UNLESS OTHERWISE NOTED, CENTER RESILIENT TILE WITHIN ROOM.
4. UNLESS OTHERWISE NOTED, ALL GWB CEILINGS AND SOFFITS TO BE PAINTED PT-1 FLAT FINISH.

KEY NOTES

518	PROVIDE METAL THRESHOLD. REFER TO DETAIL 3/A9.1.
519	FINAL POLISHED CONCRETE FLOOR FINISHED TO BE REFERENCED IN SPEC SECTION.
526	TERMINATE TILE AT SHOWER, TYPICAL
527	TERMINATE TILE AT LOCKER, TYPICAL

Texas Department of Transportation
COPYRIGHT © 2021

Jacobs
1999 Bryan Street, Suite 1200
Dallas, Tx 75201
JACOBS ENGINEERING GROUP, INC
TEXAS REGISTRATION #2966

REGISTERED ARCHITECT JOHN THOMAS STATE OF TEXAS
04/21/2021

DALLAS DISTRICT (18)
COLLIN COUNTY
McKinney Area Engineering and Maintenance Facility
2205 TX-5, McKinney, TX 75069
PROJECT NO. 18-47/0420012

ISSUED: 2021.04.21
DRAWN BY: I. Eloualid
REVISIONS:

FINISH PLAN AREA B

A9.3

THIS DRAWING CREATED FOR PRODUCTION ON 22"x34" SHEET SIZE DO NOT SCALE PRINTS.

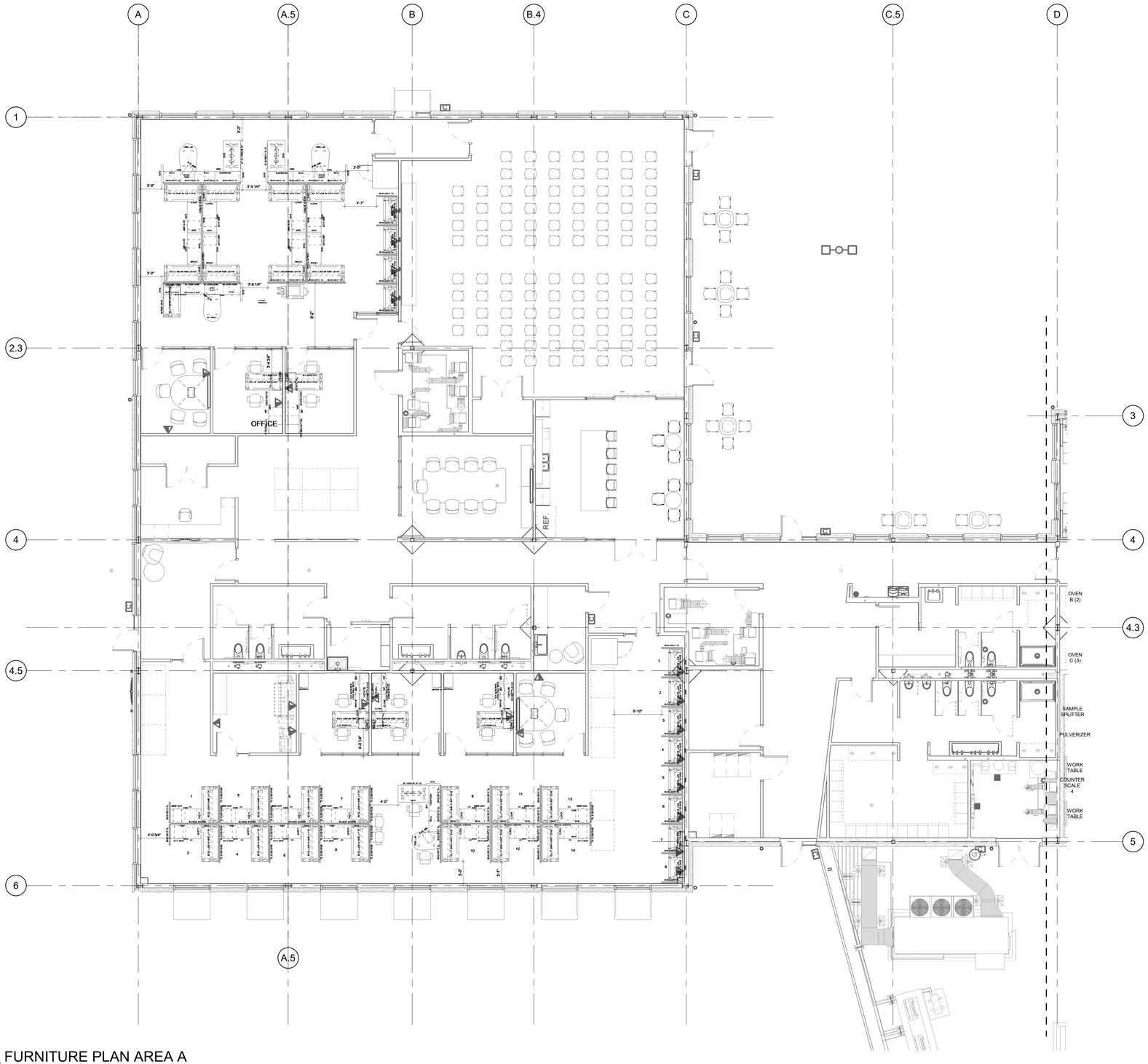

1 FURNITURE PLAN AREA A
1/8" = 1'-0"

KEYPLAN

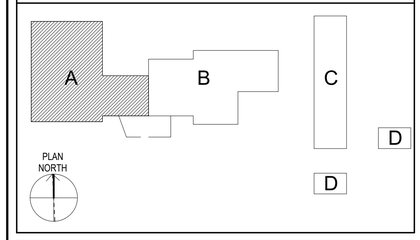

SCALES

1/8" = 1'-0"

8' 6' 4' 2' 0' 4' 8' 16'

FURNITURE / EQUIPMENT LEGEND

1. CONTRACTOR SHALL COORDINATE CONNECTION REQUIREMENTS WITH EQUIPMENT SUPPLIER
2. MILLWORKER SHALL VERIFY APPROVED EQUIPMENT SPECS WITH OWNER PRIOR TO PRODUCTION
3. FURNITURE SHOWN SHALL BE COORDINATED WITH OWNER REQUIREMENTS AND LAYOUT.
4. FIELD VERFIY AND PROVIDE LAYOUT FOR APPROVAL OF ALL FLOOR BOXES PRIOR TO SLAB PLACEMENT

Texas Department of Transportation

COPYRIGHT © 2021

Jacobs
1999 Bryan Street, Suite 1200
Dallas, Tx 75201
JACOBS ENGINEERING GROUP, INC
TEXAS REGISTRATION #2966

REGISTERED ARCHITECT
STEVEN JOHN TREMMEL
STATE OF TEXAS
04/21/2021

DALLAS DISTRICT (18)
COLLIN COUNTY
McKinney Area Engineering and Maintenance Facility
2205 TX-5, McKinney, TX 75069
PROJECT NO. 18-470420012

ISSUED: 2021.04.21
DRAWN BY: I. Eloualid
REVISIONS:

FURNITURE & EQUIPMENT PLAN AREA A

A9.4

THIS DRAWING CREATED FOR PRODUCTION ON 22"x34" SHEET SIZE. DO NOT SCALE PRINTS.

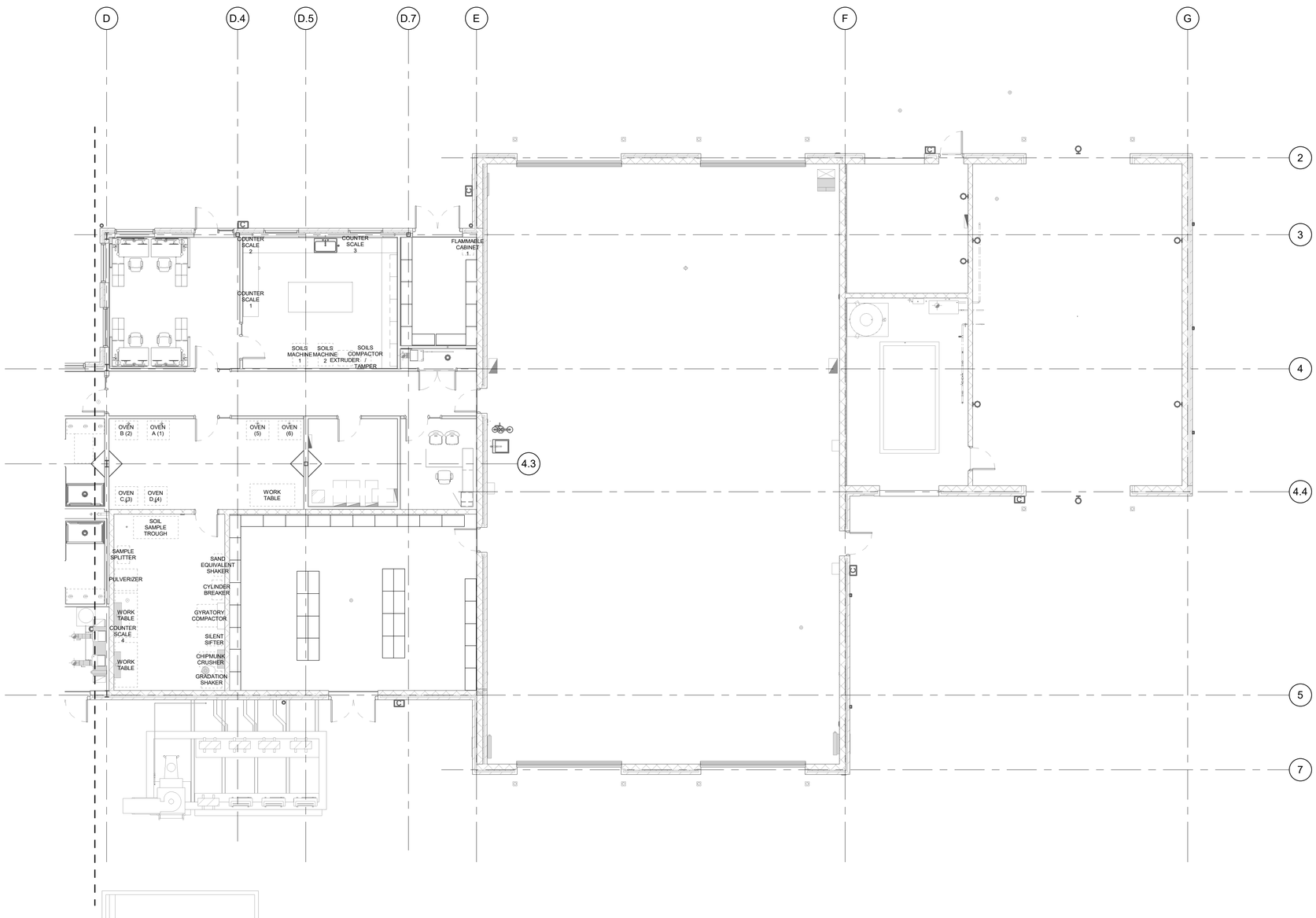

1 FURNITURE PLAN AREA B

1/8" = 1'-0"

KEYPLAN

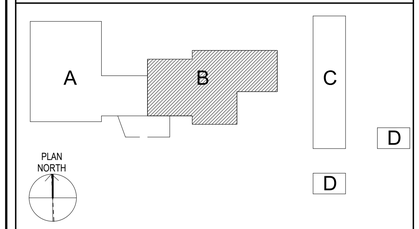

SCALES

1/8" = 1'-0"

8' 6' 4' 2' 0' 4' 8' 16'

FURNITURE / EQUIPMENT LEGEND

1. CONTRACTOR SHALL COORDINATE CONNECTION REQUIREMENTS WITH EQUIPMENT SUPPLIER
2. MILLWORKER SHALL VERIFY APPROVED EQUIPMENT SPECS WITH OWNER PRIOR TO PRODUCTION
3. FURNITURE SHOWN SHALL BE COORDINATED WITH OWNER REQUIREMENTS AND LAYOUT.
4. FIELD VERFIY AND PROVIDE LAYOUT FOR APPROVAL OF ALL FLOOR BOXES PRIOR TO SLAB PLACEMENT

Texas Department of Transportation

COPYRIGHT © 2021

Jacobs
1999 Bryan Street, Suite 1200
Dallas, Tx 75201

JACOBS ENGINEERING GROUP, INC
TEXAS REGISTRATION #2966

REGISTERED ARCHITECT STEVEN JOHN THERMAN STATE OF TEXAS

04/21/2021

DALLAS DISTRICT (18)
COLLIN COUNTY
McKinney Area Engineering and Maintenance Facility
2205 TX-5, McKinney, TX 75069
PROJECT NO. 18-470420012

ISSUED: 2021.04.21
DRAWN BY: I. Eloualid
REVISIONS:

FURNITURE & EQUIPMENT PLAN AREA B

A9.5

THIS DRAWING CREATED FOR PRODUCTION ON 22"x34" SHEET SIZE. DO NOT SCALE PRINTS.

ABBREVIATIONS

ABV	ABOVE
ADA	AMERICANS WITH DISABILITIES ACT
AD	AREA DRAIN
AFF	ABOVE FINISHED FLOOR
AL	ALUMINUM
AI	ANALOG INPUT
AO	ANALOG OUTPUT
APD	AIR PRESSURE DROP
AST	ABOVE GROUND STORAGE TANK
BAS	BUILDING AUTOMATION SYSTEM
BFF	BELOW FINISHED FLOOR
BFP	BACKFLOW PREVENTER
BDD	BACKDRAFT DAMPER
BHP	BRAKE HORSEPOWER
BOD	BOTTOM OF DUCT
BOE	BOTTOM OF EQUIPMENT
BTU	BRITISH THERMAL UNIT
BTUH	BRITISH THERMAL UNIT PER HOUR
C	CONDUIT
CA	COMPRESSED AIR
CB	CIRCUIT BREAKER
CD	CONDENSATE DRAIN
CFM	CUBIC FEET PER MINUTE
CFS	CUBIC FEET PER SECOND
CLG	CEILING
CHR	CHILLED WATER RETURN
CHS	CHILLED WATER SUPPLY
CO	CLEANOUT
CR	CONDENSER WATER RETURN
CS	CONDENSER WATER SUPPLY
CW	DOMESTIC COLD WATER
CU	COPPER
DB	DRY BULB
DCO	DOUBLE CLEANOUT
DI	DIGITAL INPUT
DN	DOWN
DO	DIGITAL OUTPUT
DT	DAY TANK
(E)	EXISTING
EAG	EXHAUST AIR GRILLE/REGISTER
EAT	ENTERING AIR TEMPERATURE
E.C.	EMPTY CONDUIT
EFF	EFFICIENCY
EPO	EMERGENCY POWER OFF
ERV	ENERGY RECOVERY VENTILATION
ESP	EXTERNAL STATIC PRESSURE
EWC	ELECTRIC WATER COOLER
EWH	ELECTRIC WATER HEATER
EWT	ENTERING WATER TEMPERATURE
EXH.	EXHAUST
(F)	FUTURE
°F	DEGREES FARENHEIT
FCO	FLOOR CLEANOUT
FD	FIRE DAMPER
FDC	FIRE DEPARTMENT CONNECTION
FDS	FUSED DISCONNECT SWITCH
FLA	FULL LOAD AMPS
FLD	FLOOR DRAIN
FL	FLOW LINE
FO	FLAT OVAL DUCT
FOR	FUEL OIL RETURN
FOS	FUEL OIL SUPPLY
FP	FIRE PROTECTION WATER
FPI	FINS PER INCH
FPM	FEET PER MINUTE
FSD	COMBINATION FIRE SMOKE DAMPER
FT	FEET
FU	FIXTURE UNITS
FV	FACE VELOCITY
G	GAS
GCO	GRADE CLEANOUT
GE	GENERAL EXHUAST
GFI	GROUND FAULT INTERUPTER
GM	GAS METER
GND	GROUND
GPH	GALLONS PER HOUR
GPM	GALLONS PER MINUTE
GRS	GALVANIZED RIGID STEEL
GW	GREASY WASTE
GWH	GAS WATER HEATER
HB	HOSE BIBB
HD	HUB DRAIN
HG	REFRIGERANT HOT GAS
HI	HARDWIRE INTERLOCK
HP	HORSEPOWER
HR	HEATING HOT WATER RETURN
HS	HEATING HOT WATER SUPPLY
HW	DOMESTIC HOT WATER
HWC	DOMESTIC HOT WATER RECIRCULATION
HX	HEAT EXCHANGER
IG	ISOLATED GROUND
IWH	INSTANTANEOUS WATER HEATER
IW	INDIRECT WASTE
IWV	INDIRECT WASTE VENT
KW	KILOWATT
L	LAVATORY
LAT	LEAVING AIR TEMPERATURE
LE	LAB EXHAUST
LBS	POUNDS
MATV	MASTER ANTENNA TELEVISION SYSTEM
MB	MOP BASIN
MBH	THOUSANDS OF BTUS PER HOUR
MCA	MINIMUM CIRCUIT AMPS
MFG	MANUFACTURER
MOCP	MAXIMUM OVERCURRENT PROTECTION
MTD	MOUNTED
NC	NOISE CRITERIA
NIC	NOT IN CONTRACT
N3R	NEMA 3R
O	OXYGEN
OA	OUTSIDE AIR
OBD	OPPOSED BLADE DAMPER
OCD	OVERFLOW CONDENSATION
OCPD	OVERCURRENT PROTECTIVE DEVICE
OFCI	OWNER FURNISHED CONTRACTOR INSTALLED
OFD	OVERFLOW ROOF DRAIN
OSD	OVERFLOW STORM DRAIN
PBD	PARALLEL BLADE DAMPER
PH	PHASE
PP	POWER POLE
PSI	POUNDS PER SQUARE INCH
PSIG	POUNDS PER SQUARE INCH (GAGE)
PVC	POLYVINYL CHLORIDE PIPE
(R)	RELOCATED
RA	RETURN AIR
RABL	RETURN AIR BOOT (L-SHAPED)
RABU	RETURN AIR BOOT (U-SHAPED)
RAG	RETURN AIR GRILLE/REGISTER
RD	ROOF DRAIN
RL	REFRIGERANT LIQUID
RPM	REVOLUTIONS PER MINUTE
RPZ	REDUCED PRESSURE ZONE
RS	REFRIGERANT SUCTION
RTU	ROOFTOP UNIT
S	SINK
SA	SUPPLY AIR
SAG	SUPPLY AIR GRILLE/REGISTER
SAN	SANITARY SEWER
SD	STORM DRAIN
SF	SQUARE FEET
SMD	SMOKE DAMPER
SP	STATIC PRESSURE
SPD	STATIC PRESSURE DROP
TPV	TRAP PRIMER VALVE
TPD	TOTAL PRESSURE DROP
TP	TOTAL PRESSURE
TW	DOMESTIC TEMPERED WATER
U	URINAL
UF	UNDERFLOOR
UG	UNDERGROUND
U.N.O	UNLESS NOTED OTHERWISE
V	VENT
VAC	VACUUM
VFD	VARIABLE FREQUENCY DRIVE
VIF	VERIFY IN FIELD
VTR	VENT THROUGH ROOF
W	SANITARY WASTE
WB	WET BULB
WC	WATER CLOSET
WCO	WALL CLEANOUT
WP	WEATHER PROOF
WPD	WATER PRESSURE DROP
WSHP	WATER-SOURCE HEAT PUMP
"WC	INCHES WATER COLUMN
"WG	INCHES WATER GAUGE
WM	WALL MOUNTED
XFMR	TRANSFORMER

MECHANICAL AND PLUMBING SYMBOLS

	DOMESTIC COLD WATER PIPING
	DOMESTIC HOT WATER PIPING
	DOMESTIC HOT WATER RECIRCULATION PIPING
	SANITARY VENT PIPING
CA	COMPRESSED AIR PIPING
CD	CONDENSATE DRAIN PIPING
CHEM	CHEMICAL TREATMENT PIPING
CHR	CHILLED WATER RETURN PIPING
CHS	CHILLED WATER SUPPLY PIPING
CR	CONDENSER WATER SUPPLY PIPING
CS	CONDENSER WATER RETURN PIPING
CW	COLD WATER PIPING
F	FIRE PROTECTION PIPING
FOR	FUEL OIL RETURN PIPING
FOS	FUEL OIL SUPPLY PIPING
FOV	FUEL OIL VENT PIPING
GAS	NATURAL GAS PIPING
GW	GREASY WASTE PIPING
HG	REFRIGERANT HOT GAS PIPING
HPC	HIGH PRESSURE STEAM CONDENSATE PIPING
HPS	HIGH PRESSURE STEAM PIPING
HR	HEATING HOT WATER RETURN PIPING
HS	HEATING HOT SUPPLY PIPING
LPC	LOW PRESSURE STEAM CONDENSATE PIPING
LPS	LOW PRESSURE STEAM PIPING
NPW	NON-POTABLE WATER PIPING
OSD	OVERFLOW STORM DRAIN PIPING
PCD	PUMPED COOLING COIL CONDESATE DRAIN PIPING
PCHR	PRIMARY CHILLED WATER RETURN PIPING
PCHS	PRIMARY CHILLED WATER SUPPLY PIPING
PHR	PRIMARY HEATING HOT WATER RETURN PIPING
PHS	PRIMARY HEATING HOT SUPPLY WATER PIPING
RL	REFRIGERANT LIQUID PIPING
RS	REFRIGERANT SUCTION PIPING
SAN	SANITARY WASTE PIPING
SCHR	SECONDARY CHILLED WATER RETURN PIPING
SCHS	SECONDARY CHILLED WATER SUPPLY PIPING
SHR	SECONDARY HEATING HOT WATER RETURN PIPING
SHS	SECONDARY HEATING HOT WATER SUPPLY PIPING
SD	STORM DRAIN PIPING
TW	TEMPERED DOMESTIC WATER PIPING
D	CHANGE OF ELEVATION - RISE (R) DROP (D)
	EXISTING DUCT
	EXISTING DUCT TO BE REMOVED
	NEW DUCT
	INDICATES DIRECTION OF AIRFLOW
	DUCT TURNED UP, NEGATIVE PRESSURE. FIRST FIGURE IS TOP DIMENSION
	DUCT TURNED UP, POSITIVE PRESSURE. FIRST FIGURE IS TOP DIMENSION
	EXHAUST DUCT SECTION UP
	RETURN DUCT SECTION UP
	SUPPLY DUCT SECTION UP
	EXHAUST DUCT SECTION DOWN
	RETURN DUCT SECTION DOWN
	SUPPLY DUCT SECTION DOWN
BDD	BACKDRAFT DAMPER
FD	HORIZONTAL FIRE DAMPER
FD	VERTICAL FIRE DAMPER
FSD	HORIZONTAL FIRE/SMOKE DAMPER
FSD	VERTICAL FIRE/SMOKE DAMPER
SD	HORIZONTAL SMOKE DAMPER
SD	VERTICAL SMOKE DAMPER
	MANUAL VOLUME DAMPER
	DUCT CAP
M	MOTORIZED DAMPER
	CEILING DIFFUSER
	CEILING EXHAUST/RETURN GRILLE
	SIDEWALL GRILLE OR REGISTER
	SLOT DIFFUSER OR GRILLE
	CAP
	PIPE TURNED DOWN
	PIPE TURNED UP
	PIPE ELBOW
	PIPE CROSS
	PIPE TEE
	COMBINATION WYE AND EIGHTH BEND
	PIPE TEE BOTTOM CONNECTION
	PIPE TEE UP
	PIPE TEE TOP CONNECTON
	PIPE FLANGE
	PIPE UNION
	CONCENTRIC PIPE REDUCER
	ECCENTRIC PIPE REDUCER
	PIPE STRAINER
	CLEANOUT PLUG
	TRAP
	AUTOMATIC BUTTERFLY VALVE
	ANGLE VALVE
	BALANCING VALVE
	BALL VALVE
	BUTTERFLY VALVE
	CALIBRATED BALANCING VALVE
	CHECK VALVE
	GAS COCK
	GATE VALVE
	GLOBE VALVE
	HOT TAP
	NEEDLE VALVE
	PLUG VALVE
	PRESSURE REDUCING VALVE
	PRESSURE REGULATOR
	REGULATOR
	PRESSURE RELIEF VALVE
	SOLENOID VALVE
	THERMOSTATIC MIXING VALVE
	THREE WAY CONTROL VALVE
	TWO WAY CONTROL VALVE
	BALANCING VALVE
	VALVE MOUNTED IN VERTICAL
	TRAP PRIMER VALVE
	WATER HAMMER ARRESTER
	HOSE BIBB
	P-TRAP
	PENETRATION
CO2	CARBON DIOXIDE SENSOR
	CONNECT NEW TO EXISTING
DPS	DIFFERENTIAL PRESSURE SENSOR (V.N.O)
FM	FLOW METER
	FLOW METER
	FULL ENCIRCLEMENT TEE
H	HUMIDISTAT
H	HUMIDITY SENSOR
HYD	HYDROGEN SENSOR
	PRESSURE GAUGE
	PUMP
	PUMP
	ROUND
	THERMOMETER
	SLOPED PIPING
	SPRINKLER HEAD
SP	STATIC PRESSURE SENSOR
T	TEMPERATURE SENSOR
	TEMPERATURE WELL
T	THERMOSTAT
VFD	VARIABLE FREQUENCY DRIVE CONTROLLER
	WATER HAMMER ARRESTER
DIFFUSER, REGISTER, GRILLE TAG	SCHEDULE DESIGNATION; A: NECK SIZE; 10"Ø; 200: AIR QUANTITY (CFM)
TERMINAL UNIT TAG	VAV-1: SCHEDULE DESIGNATION; 2000: AIR QUANTITY (CFM)
CO/NO2	CARBON MONOXIDE / NITROGEN DIOXIDE

BASIS OF DESIGN

CODES:
MECHANICAL: 2018 INTERNATIONAL MECHANICAL CODE, WITH AMENDMENTS
ELECTRICAL: 2020 NATIONAL ELECTRICAL CODE, WITH AMENDMENTS
PLUMBING: 2018 INTERNATIONAL PLUMBING CODE, WITH AMENDMENTS
ENERGY: 2018 INTERNATIONAL ENERGY CODE, WITH AMENDMENTS
VENTILATION: 2016 ASHRAE 62.1

PLUMBING SYSTEM DESIGN:

SANITARY SERVICE:
SANITARY MAINS ARE USED TO CARRY ALL PLUMBING AND CONDENSATE WASTE FROM THE NEW BUILDING.
DRAINAGE FIXTURE UNITS: 80 DFU

DOMESTIC COLD WATER:
A NEW 3" DOMESTIC COLD WATER SERVICE IS ROUTED UNDERGROUND TO THE MECHANICAL ROOM AND THEN DISTRIBUTED AS SHOWN.
DOMESTIC COLD WATER FIXTURE UNITS: 160 FU
TOTAL GPM: 80

DOMESTIC HOT WATER SYSTEM:
GROUND WATER TEMPERATURE: 62º F
TEMPERATURE OF HOT WATER BEING PROVIDED: STORED AT 140º F.
PROVIDE THERMOSTATIC MIXING VALVES AT WATER HEATERS AND DELIVER WATER TO FIXTURES AT 110º F.

GAS SYSTEM:
NEW 2" GAS SERVICE IS ROUTED TO THE MECHANICAL ROOM AND THEN DISTRIBUTES AS SHOWN.
TOTAL BUILDING CAPACITY: 335 MBH
TOTAL DEVELOPED LENGTH: 200 FEET

STORM SYSTEM:
RAINFALL RATE USED: 6 INCHES / HOUR

PRICING NOTES

THE ENTIRE SCOPE OF THE CONTRACTORS WORK IS SHOWN THROUGHOUT THE ENTIRE SET OF DOCUMENTS. IT SHALL BE EACH CONTRACTOR'S RESPONSIBILITY TO THOROUGHLY REVIEW THE ENTIRE SET OF DOCUMENTS INCLUDING, BUT NOT LIMITED TO, THE ENTIRE MECHANICAL, ELECTRICAL, PLUMBING, ARCHITECTURAL, STRUCTURAL, CIVIL, AND AUDIO/VISUAL DOCUMENTS AND INCLUDE ALL SCOPE IN THE CONTRACTORS RESPONSIBILITY EVEN IF IT IS NOT SHOWN DIRECTLY ON THEIR RESPECTIVE TRADES' DOCUMENTS.

THE CONTRACTOR'S BID PRICE SHALL INCLUDE ALL PARTS AND ITEMS NECESSARY FOR A COMPLETE WORKING SYSTEM, EVEN IF EVERY PART IS NOT DOCUMENTED IN THE DRAWINGS.

Texas Department of Transportation

COPYRIGHT © 2021

DFW Consulting Group, Inc.
1616 Corporate Court, Suite 100
Irving, Tx 75038
(972) 929-1199
www.dfwcgi.com
Project No. :20014
Firm Registration No. :720

STATE OF TEXAS
KENNETH DAVID DIELINE
61722
REGISTERED
PROFESSIONAL ENGINEER
04/21/2021

DALLAS DISTRICT (18)
COLLIN COUNTY
McKinney Area Engineering and Maintenance Facility
2205 TX-5, McKinney, TX 75069
PROJECT NO. 18-47042/0012

ISSUED: 2021.04.21
DRAWN BY: DFWCGI
REVISIONS:

PLUMBING LEGENDS & ABBREVIATION

P0.1

THIS DRAWING CREATED FOR PRODUCTION ON 22"x34" SHEET SIZE. DO NOT SCALE PRINTS.

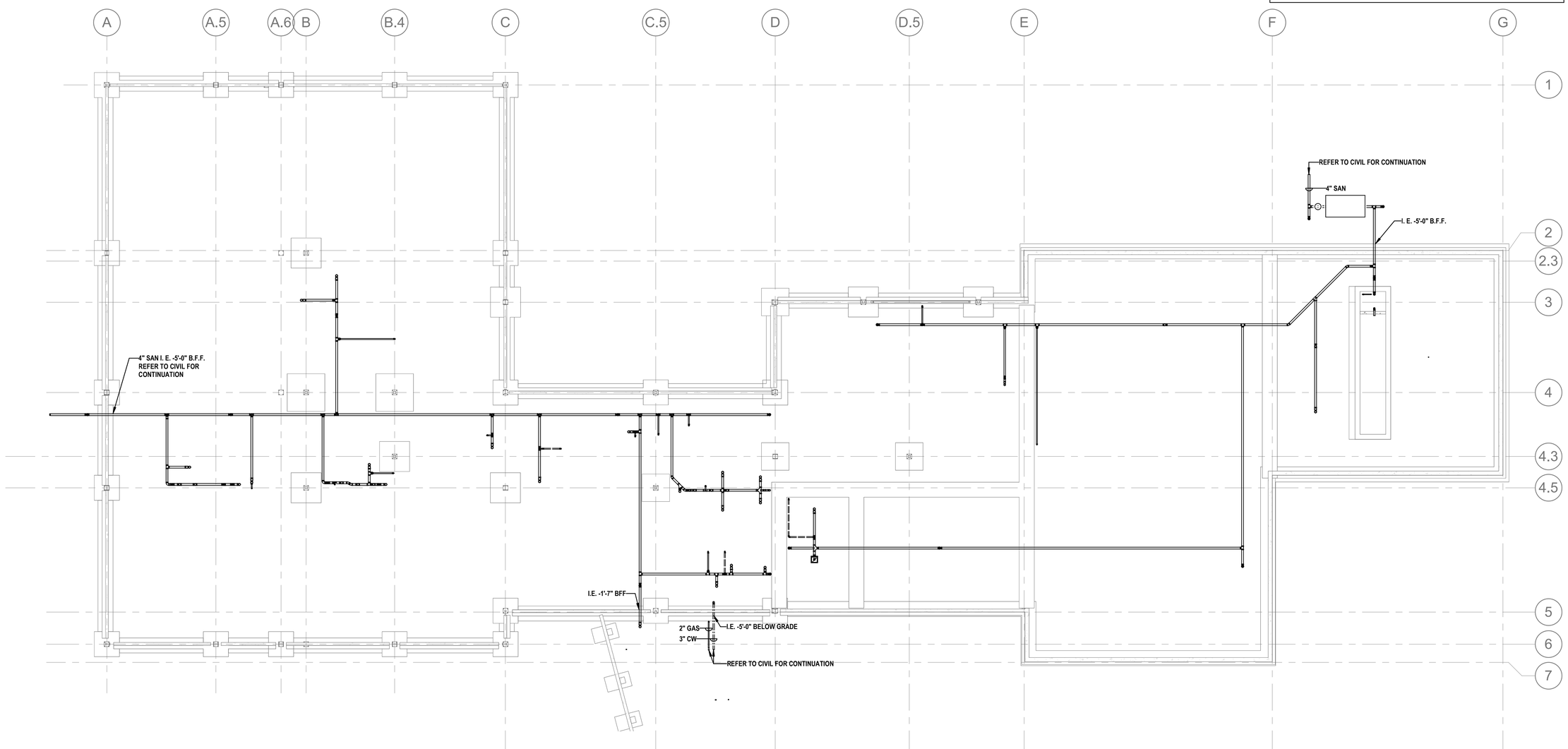

01 UNDERFLOOR PLUMBING PLAN OVERALL

SCALE: 3/32" = 1'-0"

KEYPLAN

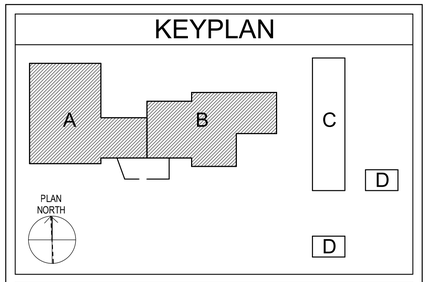

SCALES

3/32" = 1'-0"

16' 8' 0' 8' 16' 24'

Texas Department of Transportation

COPYRIGHT © 2021

DFW Consulting Group, Inc.
1616 Corporate Court, Suite 100
Irving, Tx 75038
(972) 929-1199
www.dfwcgi.com
Project No. :20014
Firm Registration No. :720

STATE OF TEXAS
KENNETH DAVID SAELINE
61722
REGISTERED PROFESSIONAL ENGINEER
04/21/2021

DALLAS DISTRICT (18)
COLLIN COUNTY
McKinney Area Engineering and Maintenance Facility
2205 TX-5, McKinney, TX 75069
PROJECT NO. 18-470420012

ISSUED: 2021.04.21
DRAWN BY: DFWCGI
REVISIONS:

UNDERFLOOR PLUMBING PLAN OVERALL

P2.1

THIS DRAWING CREATED FOR PRODUCTION ON 22"x34" SHEET SIZE DO NOT SCALE PRINTS.

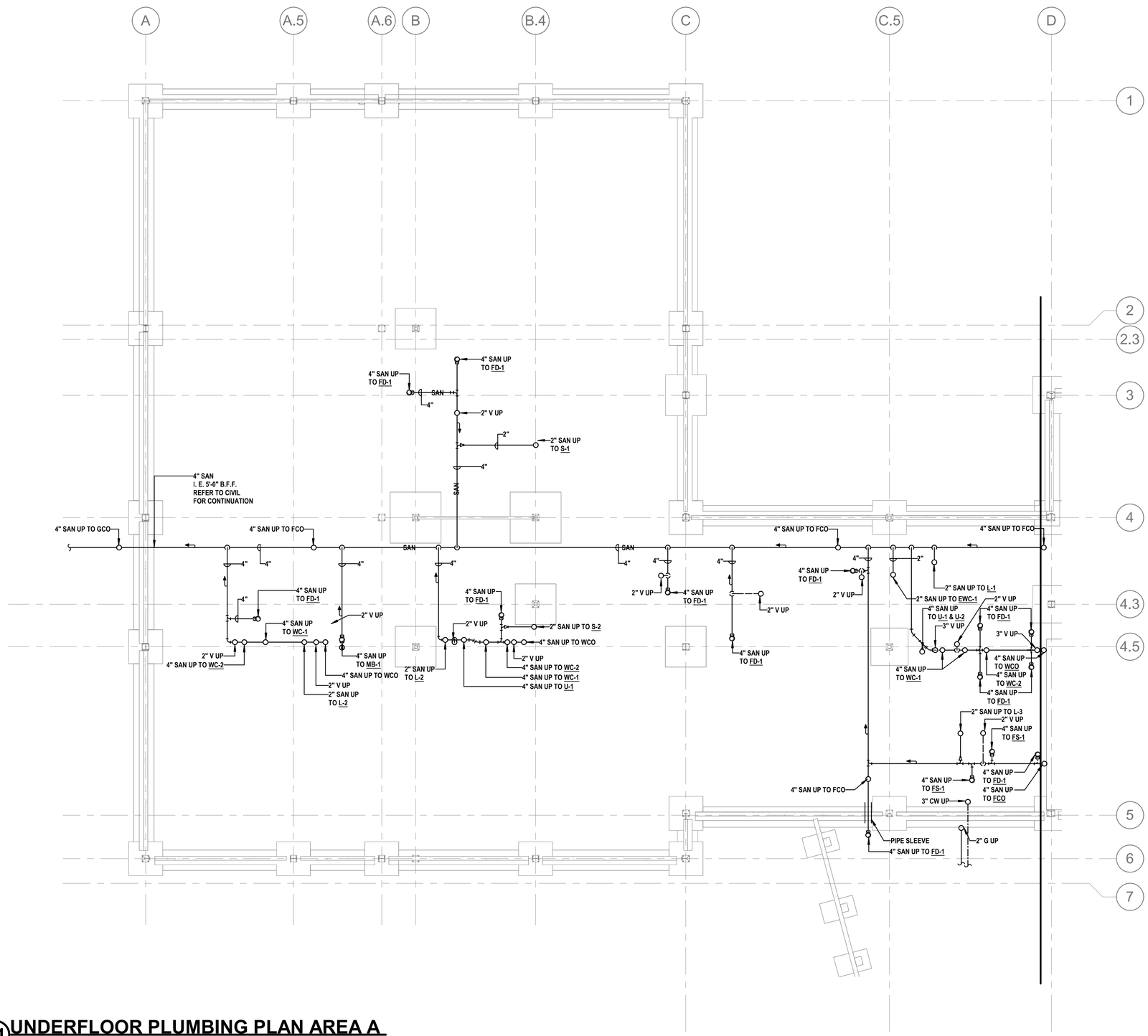

01 UNDERFLOOR PLUMBING PLAN AREA A

SCALE: 1/8" = 1'-0"

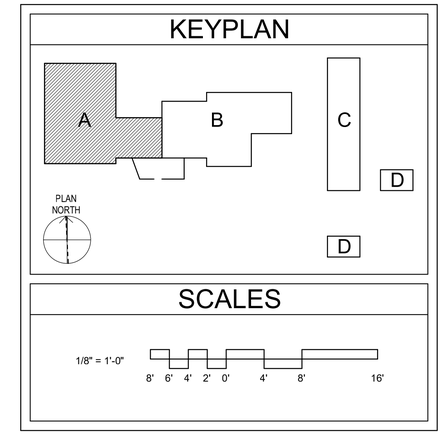

Texas Department of Transportation

COPYRIGHT © 2021

DFW Consulting Group, Inc.
1616 Corporate Court, Suite 100
Irving, Tx 75038
(972) 929-1199
www.dfwcgi.com
Project No. :20014
Firm Registration No. :720

KENNETH DAVID MELINE 61722 REGISTERED PROFESSIONAL ENGINEER 04/21/2021

DALLAS DISTRICT (18)
COLLIN COUNTY
McKinney Area Engineering and Maintenance Facility
2205 TX-5, McKinney, TX 75069
PROJECT NO. 18-470420012

ISSUED: 2021.04.21
DRAWN BY: DFWCGI
REVISIONS:

UNDERFLOOR PLUMBING PLAN AREA A

P2.2

THIS DRAWING CREATED FOR PRODUCTION ON 22"x34" SHEET SIZE. DO NOT SCALE PRINTS.

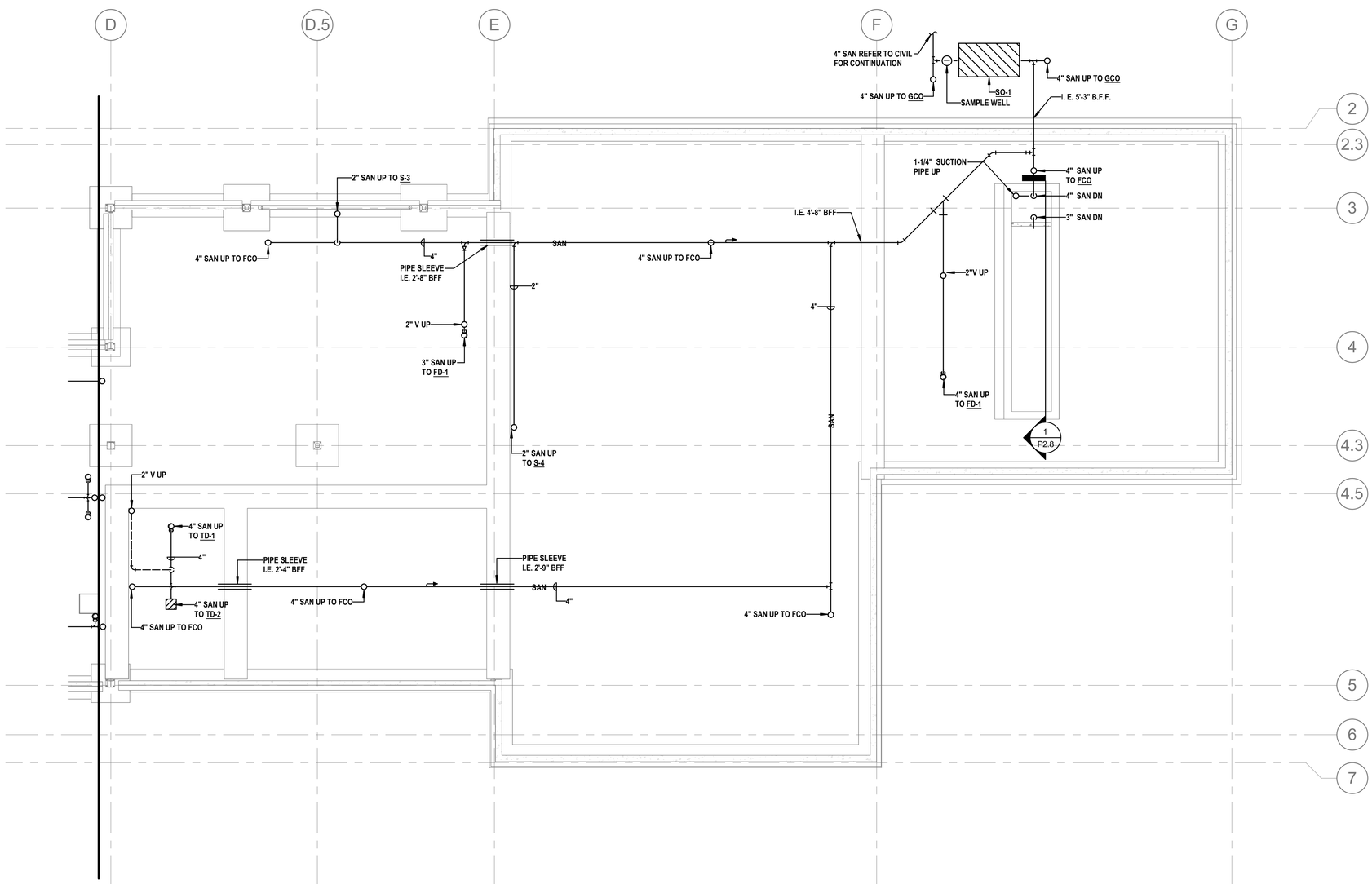

01 UNDERFLOOR PLUMBING PLAN AREA B

SCALE: 1/8" = 1'-0"

KEYPLAN

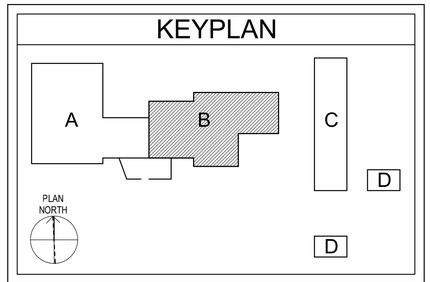

SCALES

1/8" = 1'-0"

8' 6' 4' 2' 0' 4' 8' 16'

Texas Department of Transportation

COPYRIGHT © 2021

DFW Consulting Group, Inc.
1616 Corporate Court, Suite 100
Irving, Tx 75038
(972) 929-1199
www.dfwcgi.com
Project No. :20014
Firm Registration No. :720

STATE OF TEXAS
KENNETH DAVID MELINE
61722
REGISTERED PROFESSIONAL ENGINEER
04/21/2021

DALLAS DISTRICT (18)
COLLIN COUNTY
McKinney Area Engineering and Maintenance Facility
2205 TX-5, McKinney, TX 75069
PROJECT NO. 18-470420012

ISSUED: 2021.04.21
DRAWN BY: DFWCGI
REVISIONS:

UNDERFLOOR PLUMBING PLAN AREA B

P2.3

THIS DRAWING CREATED FOR PRODUCTION ON 22"x34" SHEET SIZE DO NOT SCALE PRINTS.

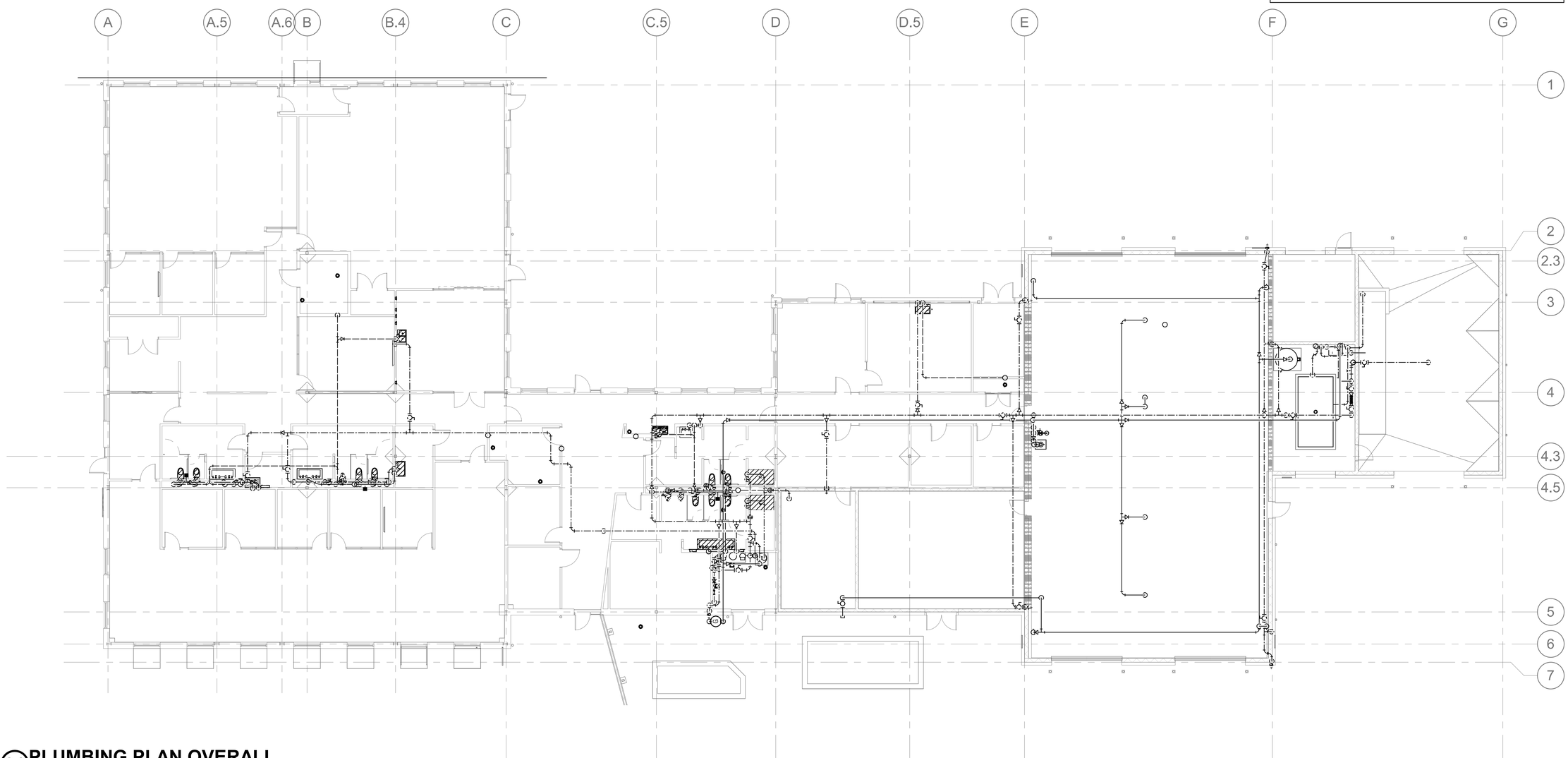

01 **PLUMBING PLAN OVERALL**
SCALE: 3/32" = 1'-0"

KEYPLAN

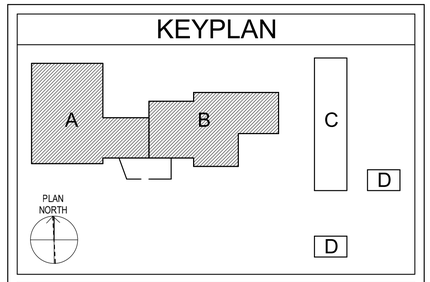

SCALES

3/32" = 1'-0"

16' 8' 0' 8' 16' 24'

Texas Department of Transportation

COPYRIGHT © 2021

DFW Consulting Group, Inc.
1616 Corporate Court, Suite 100
Irving, Tx 75038
(972) 929-1199
www.dfwcgi.com
Project No. :20014
Firm Registration No. :720

STATE OF TEXAS
KENNETH DAVID SAELINE
61722
REGISTERED PROFESSIONAL ENGINEER
04/21/2021

DALLAS DISTRICT (18)
COLLIN COUNTY
McKinney Area Engineering and Maintenance Facility
2205 TX-5, McKinney, TX 75069
PROJECT NO. 18-470420012

ISSUED: 2021.04.21
DRAWN BY: DFWCGI
REVISIONS:

PLUMBING PLAN OVERALL

P2.4

THIS DRAWING CREATED FOR PRODUCTION ON 22"x34" SHEET SIZE DO NOT SCALE PRINTS.

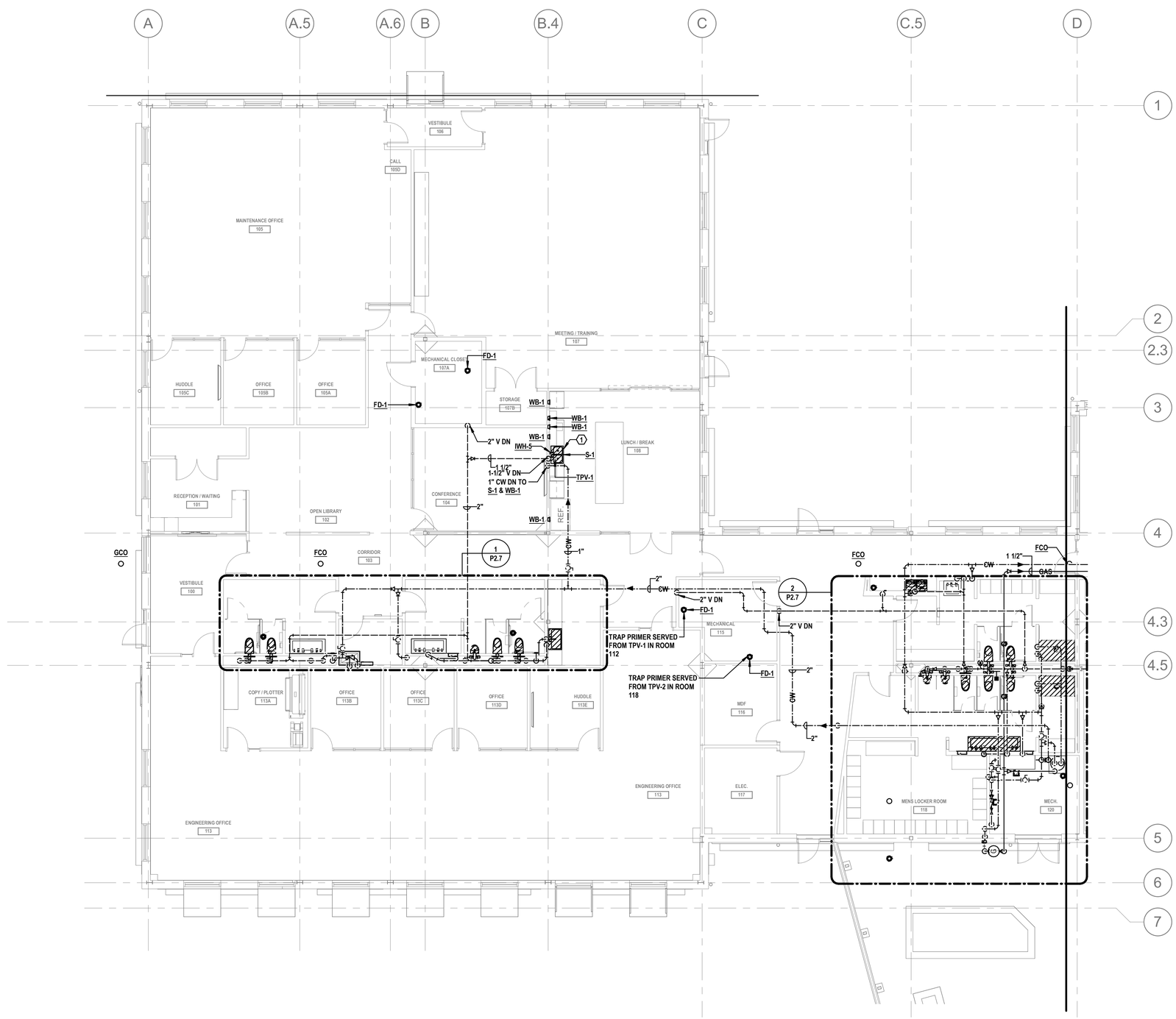

01 PLUMBING PLAN AREA A

SCALE: 1/8" = 1'-0"

KEYPLAN

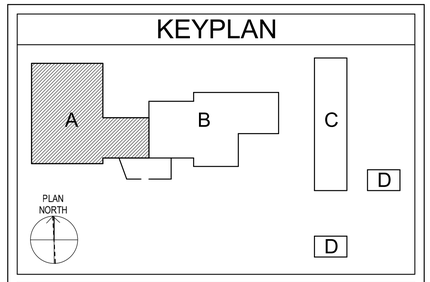

SCALES

1/8" = 1'-0"

8' 6' 4' 2' 0' 4' 8' 16'

KEYED NOTES BY SYMBOL "⬡"

1	PROVIDE WITH TPV-1, TPV-1 WILL CONNECT TO (2)FD-1'S IN ROOM 107A.

Texas Department of Transportation

COPYRIGHT © 2021

DFW Consulting Group, Inc.
1616 Corporate Court, Suite 100
Irving, Tx 75038
(972) 929-1199
www.dfwcgi.com
Project No. :2004
Firm Registration No. :720

STATE OF TEXAS
KENNETH DAVID MELINE
61722
REGISTERED PROFESSIONAL ENGINEER
04/21/2021

DALLAS DISTRICT (18)
COLLIN COUNTY

McKinney Area Engineering and Maintenance Facility

2205 TX-5, McKinney, TX 75069

PROJECT NO. 18-470420012

ISSUED: 2021.04.21

DRAWN BY: DFWCGI

REVISIONS:

PLUMBING PLAN AREA A

P2.5

THIS DRAWING CREATED FOR PRODUCTION ON 22"x34" SHEET SIZE. DO NOT SCALE PRINTS.

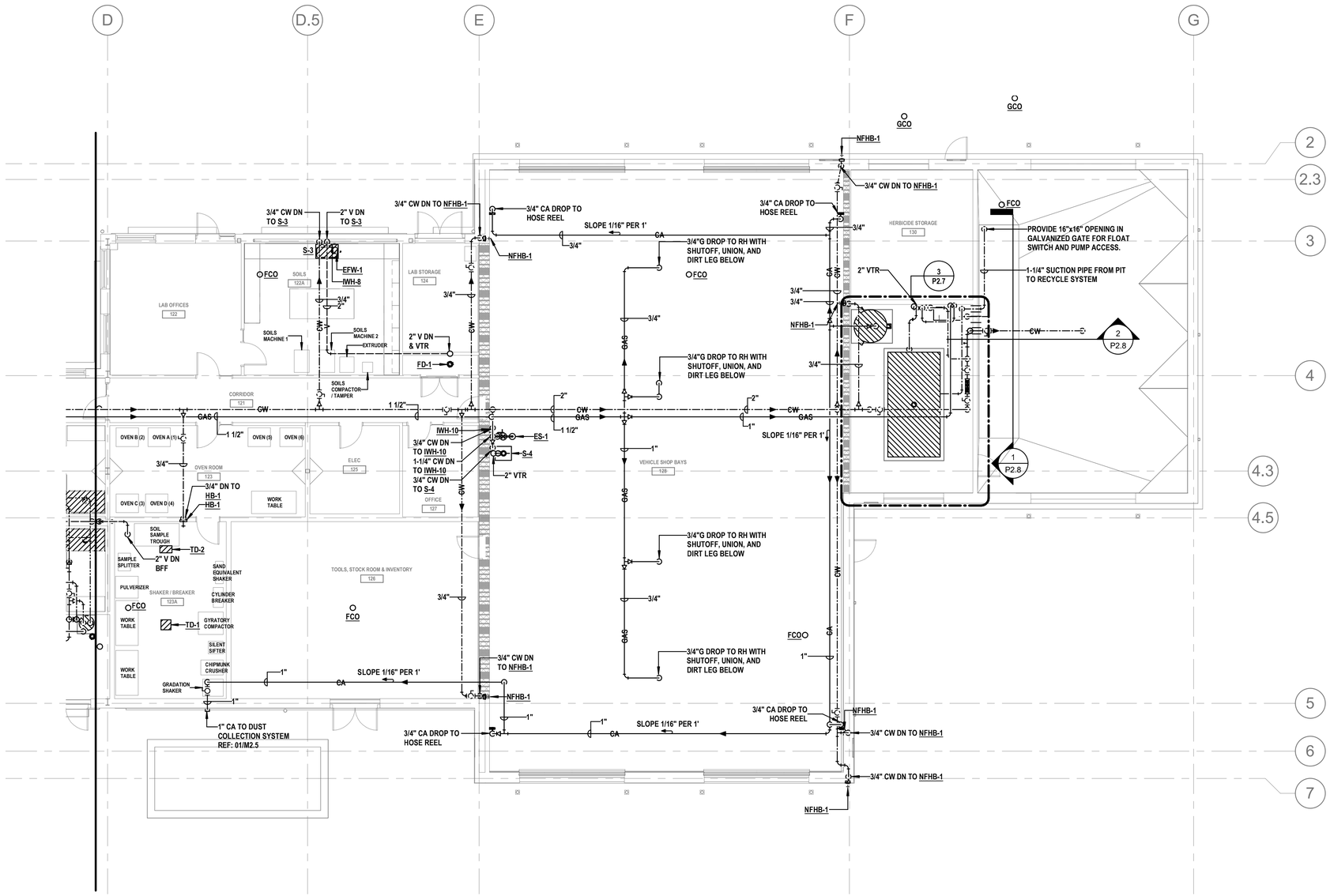

01 PLUMBING PLAN AREA B

SCALE: 1/8" = 1'-0"

KEYPLAN

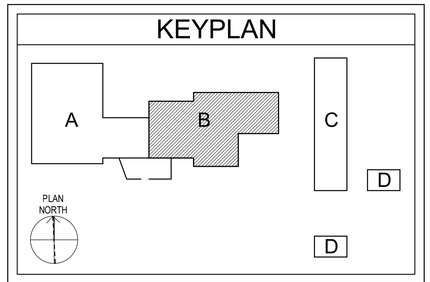

SCALES

1/8" = 1'-0"

8' 6' 4' 2' 0' 4' 8' 16'

KEYED NOTES BY SYMBOL "⬡"

Texas Department of Transportation
COPYRIGHT © 2021

DFW Consulting Group, Inc.
1616 Corporate Court, Suite 100
Irving, Tx 75038
(972) 929-1199
www.dfwcgi.com
Project No. :20044
Firm Registration No. :720
KENNETH DAVID MELINE
61722
REGISTERED PROFESSIONAL ENGINEER
04/21/2021

DALLAS DISTRICT (18)
COLLIN COUNTY
McKinney Area Engineering and Maintenance Facility
2205 TX-5, McKinney, TX 75069
PROJECT NO. 18-470420012

ISSUED: 2021.04.21
DRAWN BY: DFWCGI
REVISIONS:

PLUMBING PLAN AREA B

P2.6

THIS DRAWING CREATED FOR PRODUCTION ON 22"x34" SHEET SIZE. DO NOT SCALE PRINTS.

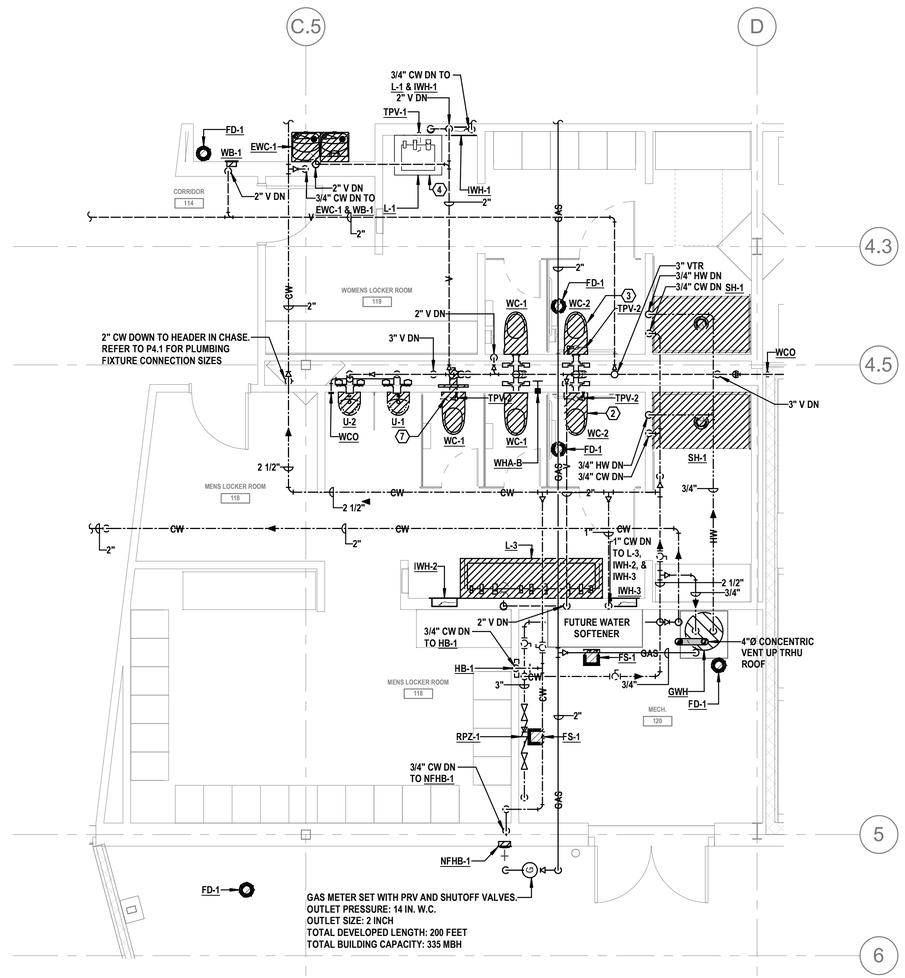

02 MENS/WOMENS LOCKERS
SCALE: 1/4" = 1'-0"

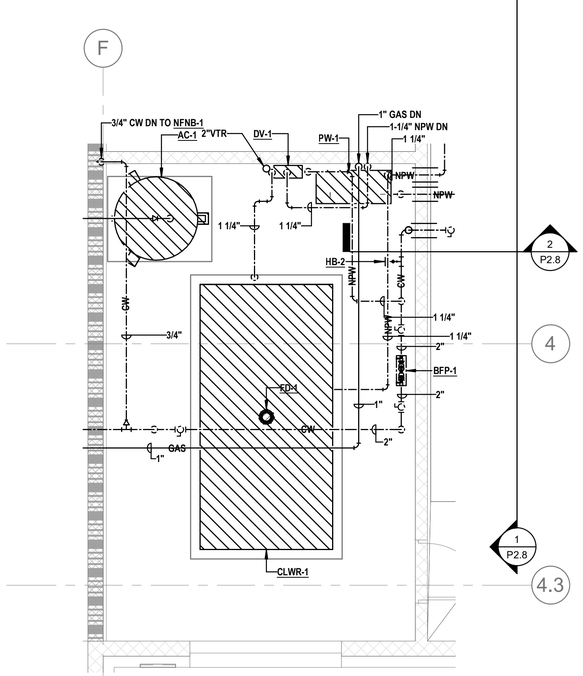

03 EQUIPMENT STORAGE
SCALE: 1/4" = 1'-0"

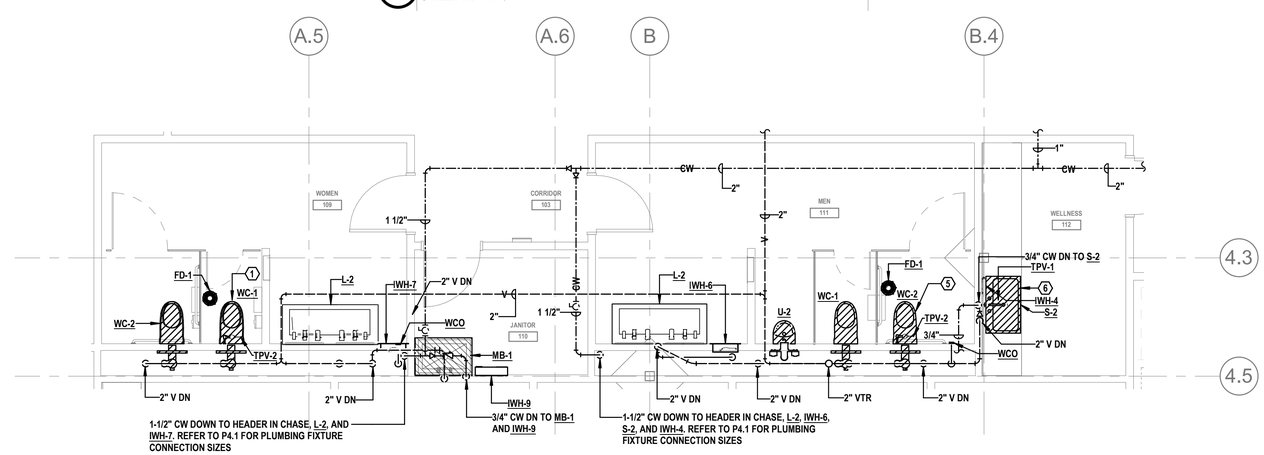

01 MENS 111 / WOMEN 109
SCALE: 1/4" = 1'-0"

KEYPLAN

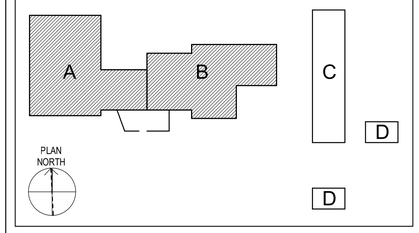

SCALES

KEYED NOTES BY SYMBOL "⬡"

1	PROVIDE WITH TPV-2. TPV-2 WILL CONNECT TO FD-1 IN ROOM 109.
2	PROVIDE WITH TPV-2, TPV-2 WILL CONNECT TO FD-1 AND SH-1 IN ROOM 118.
3	PROVIDE WITH TPV-2, TPV-2 WILL CONNECT TO FD-1 AND SH-1 IN ROOM 119.
4	PROVIDE WITH TPV-1, TPV-1 WILL CONNECT TO FD-1 IN ROOM 114.
5	PROVIDE WITH TPV-2, TPV-2 WILL CONNECT TO FD-1 IN ROOM 111.
6	PROVIDE WITH TPV-1, TPV-1 WILL CONNECT TO FD-1 IN ROOM 115.
7	PROVIDE WITH TPV-2, TPV-2 WILL CONNECT TO FD-1 IN ROOM 115.

Texas Department of Transportation
COPYRIGHT © 2021

DFW Consulting Group, Inc.
1616 Corporate Court, Suite 100
Irving, Tx 75038
(972) 929-1199
www.dfwcgi.com
Project No. :2004
Firm Registration No. :720
KENNETH DAVID MELINE
61722
REGISTERED PROFESSIONAL ENGINEER
04/21/2021

DALLAS DISTRICT (18)
COLLIN COUNTY
McKinney Area Engineering and Maintenance Facility
2205 TX-5, McKinney, TX 75069
PROJECT NO. 18-470420012

ISSUED: 2021.04.21
DRAWN BY: DFWCGI
REVISIONS:

ENLARGED PLUMBING PLANS

P2.7

THIS DRAWING CREATED FOR PRODUCTION ON 22"x34" SHEET SIZE. DO NOT SCALE PRINTS.

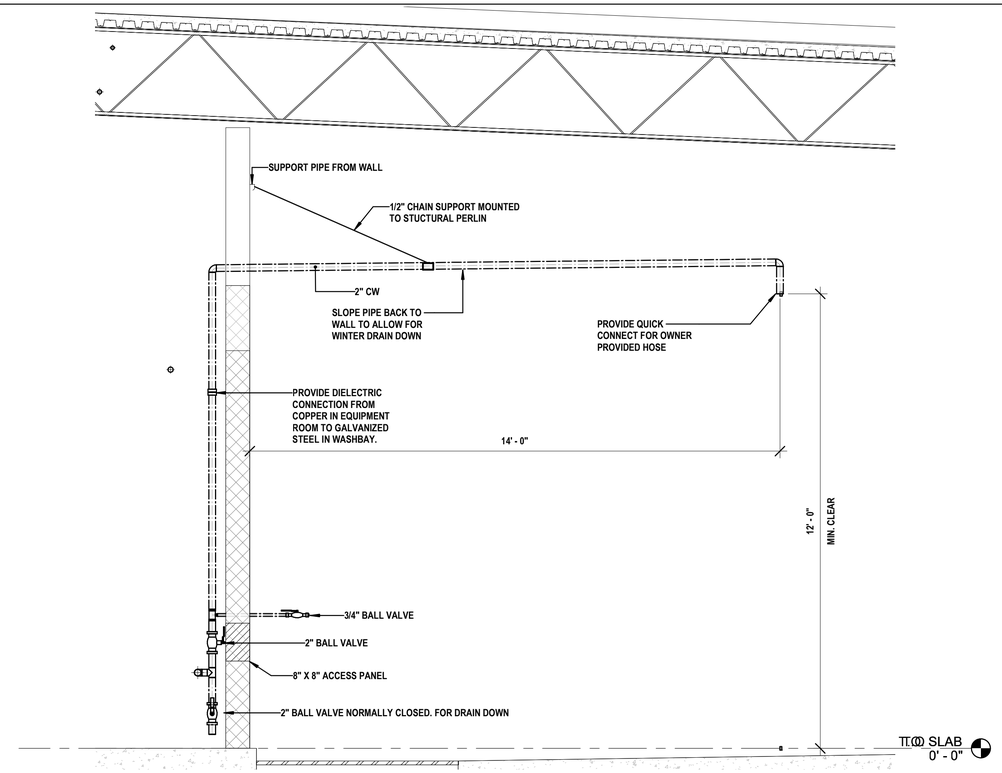

02 TRUCK FILL STANDPIPE

SCALE: 1/2" = 1'-0"

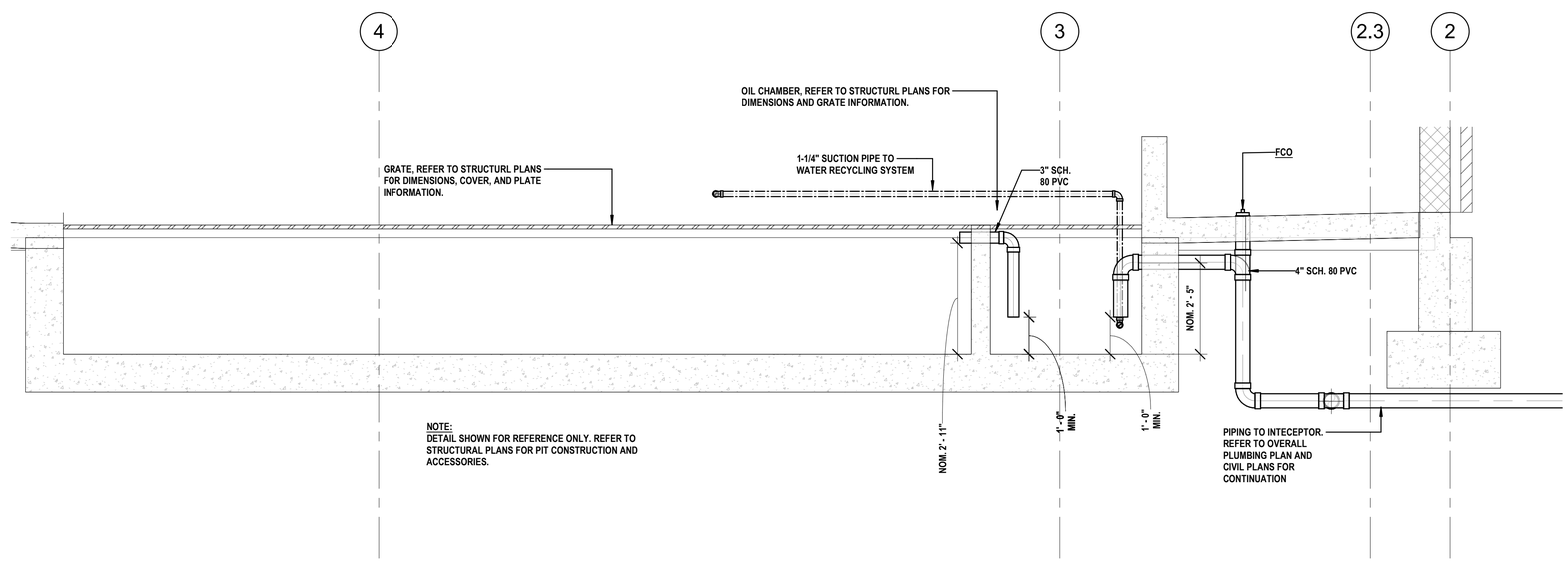

01 WASH BAY PIT

SCALE:NONE

Texas Department of Transportation

COPYRIGHT © 2021

DFW Consulting Group, Inc.
1616 Corporate Court, Suite 100
Irving, Tx 75038
(972) 929-1199
www.dfwcgi.com
Project No. :20044
Firm Registration No. :720

STATE OF TEXAS
KENNETH DAVID SIELINE
61722
REGISTERED PROFESSIONAL ENGINEER
04/21/2021

DALLAS DISTRICT (18)
COLLIN COUNTY
McKinney Area Engineering and Maintenance Facility
2205 TX-5, McKinney, TX 75069
PROJECT NO. 18-470420012

ISSUED: 2021.04.21
DRAWN BY: DFWCGI
REVISIONS:

PLUMBING SECTIONS

P2.8

THIS DRAWING CREATED FOR PRODUCTION ON 22"x34" SHEET SIZE. DO NOT SCALE PRINTS.

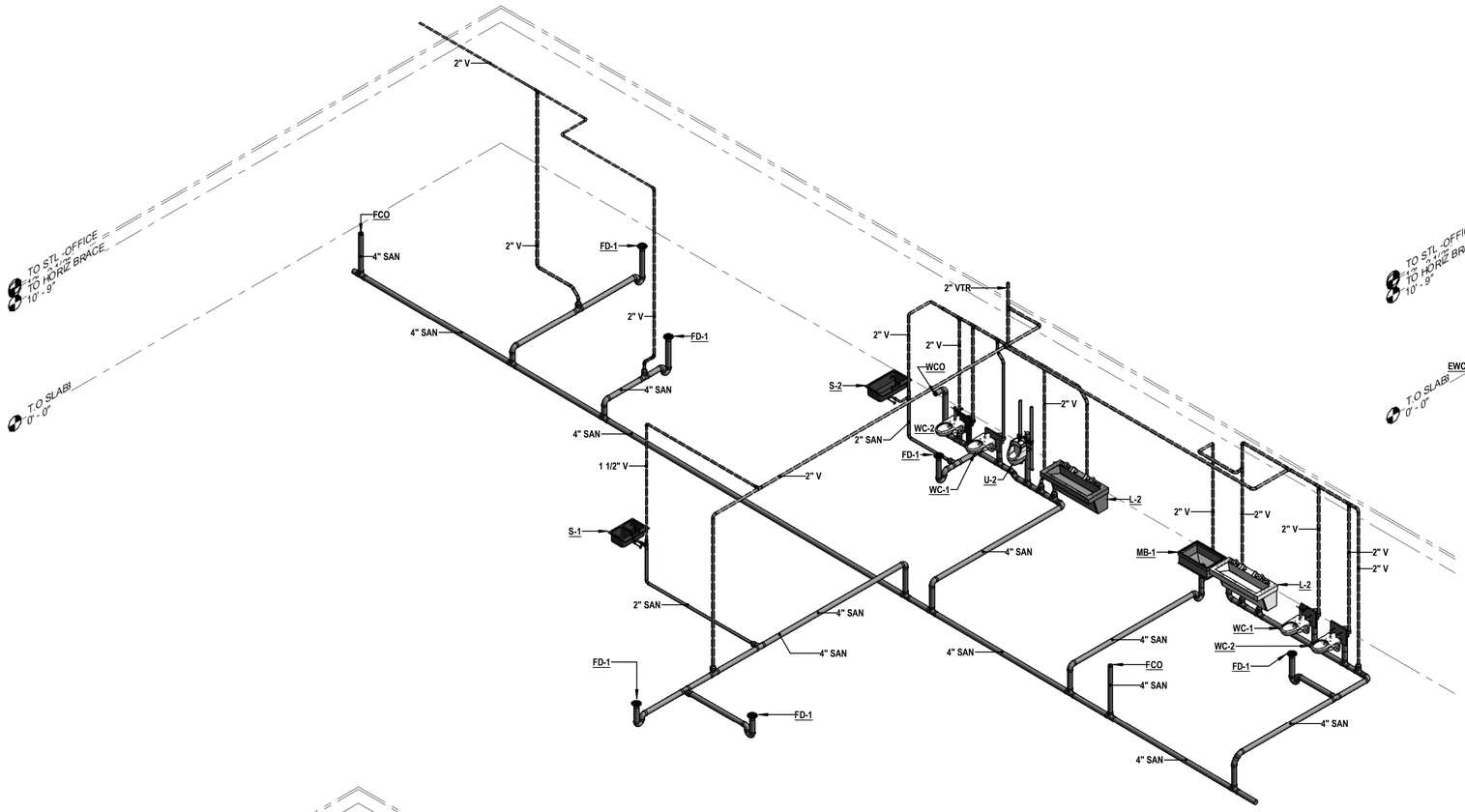

04 PLUMBING DWV ISO
SCALE: NONE

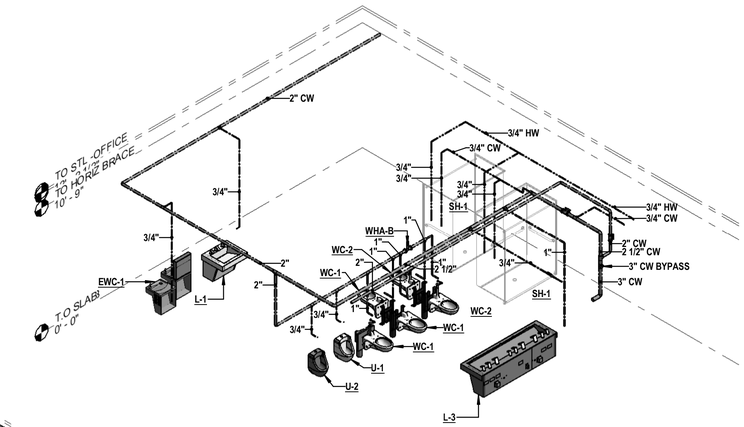

02 MENS/WOMENS LOCKERS PLUMBING DCW
SCALE:

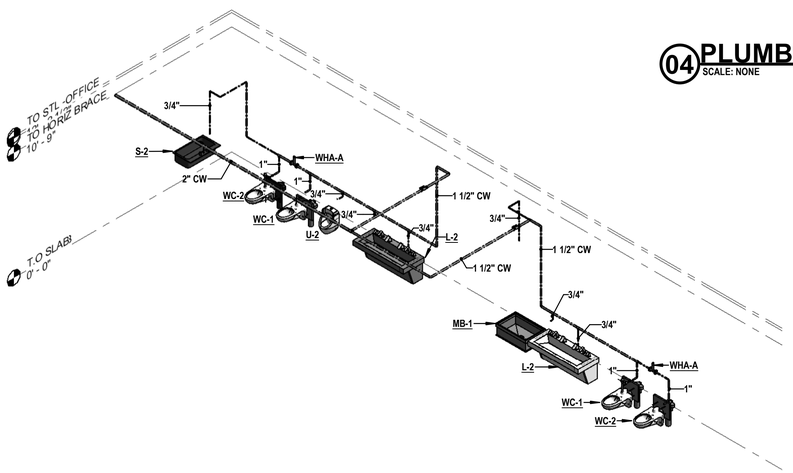

03 WOMEN 109 & MEN 111 CW
SCALE:

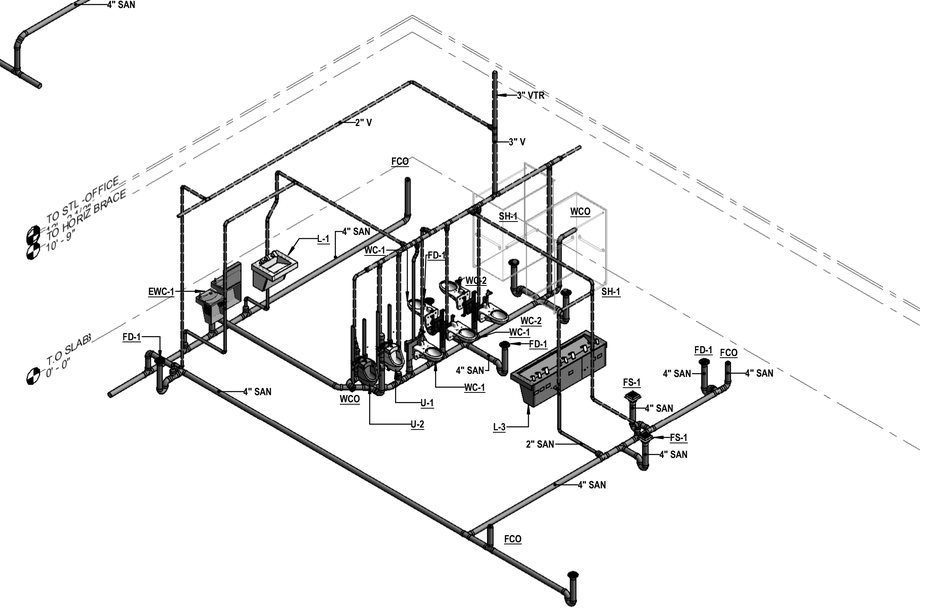

01 MENS/WOMENS LOCKERS PLUMBING DWV
SCALE: NONE

Texas Department of Transportation
COPYRIGHT © 2021

DFW Consulting Group, Inc.
1616 Corporate Court, Suite 100
Irving, Tx 75038
(972) 929-1199
www.dfwcgi.com
Project No. :2004
Firm Registration No. :720
KENNETH DAVID MELINE
61722
REGISTERED PROFESSIONAL ENGINEER
04/21/2021

DALLAS DISTRICT (18)
COLLIN COUNTY
McKinney Area Engineering and Maintenance Facility
2205 TX-5, McKinney, TX 75069
PROJECT NO. 18-470420012

ISSUED: 2021.04.21
DRAWN BY: DFWCGI
REVISIONS:

PLUMBING RISER DIAGRAMS

P3.1

THIS DRAWING CREATED FOR PRODUCTION ON 22"x34" SHEET SIZE. DO NOT SCALE PRINTS.

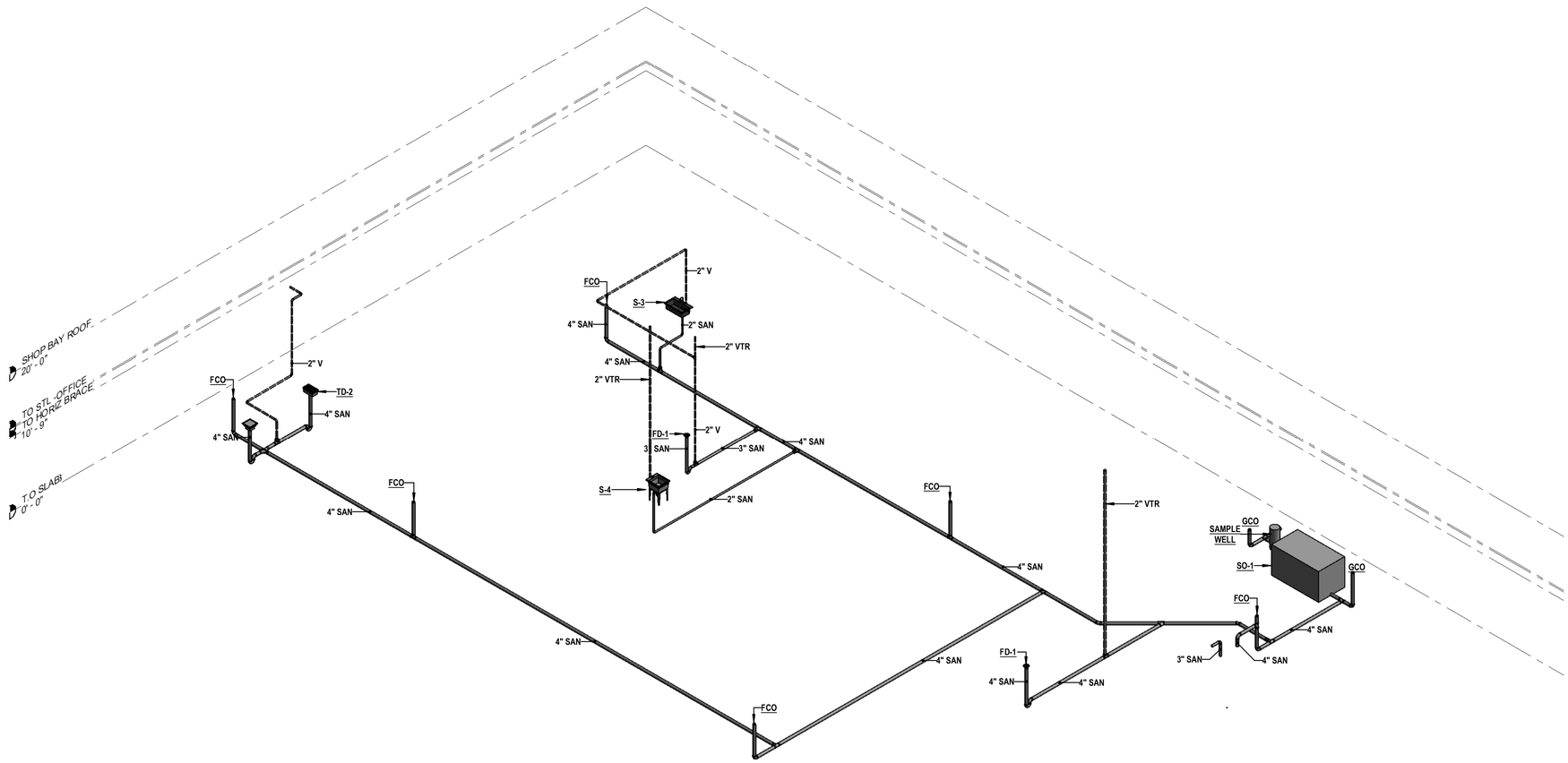

01 LAB AND SHOP DWV ISO

SCALE:

Texas Department of Transportation

COPYRIGHT © 2021

DFW Consulting Group, Inc.
1616 Corporate Court, Suite 100
Irving, Tx 75038
(972) 929-1199
www.dfwcgi.com
Project No. :20014
Firm Registration No. :720

KENNETH DAVID MELINE
61722
REGISTERED PROFESSIONAL ENGINEER
04/21/2021

DALLAS DISTRICT (18)
COLLIN COUNTY
McKinney Area Engineering and Maintenance Facility
2205 TX-5, McKinney, TX 75069
PROJECT NO. 18-470420012

ISSUED: 2021.04.21
DRAWN BY: DFWCGI
REVISIONS:

PLUMBING RISER DIAGRAMS

P3.2

THIS DRAWING CREATED FOR PRODUCTION ON 22"x34" SHEET SIZE DO NOT SCALE PRINTS.

PLUMBING FIXTURE SCHEDULE

TYPE IMAGE	MARK	MFG	MODEL	DESCRIPTION
	BFP-1	WATTS	007M2QT 1-1/2"	1-1/2" DOUBLE CHECK VALVE BACKFLOW PREVETER ASSEMBLY WITH BRONZE BODY CONSTRUCTION, NPT END CONNECTIONS, QUARTER TURN BALL VALVE SHUTOFFS, TOP MOUNTED TEST COCKS, TWO IN-LINE INDEPENDENT POSITIVE SEATING CHECK MODULES, CAPTURED SPRINGS, AND REPLACEABLE CHECK DISCS AND SEATS.
	DV-1	BELIMO	Z2ZN0126	1-1/4" 3-WAY VALVE WITH SPRING RETURN AND 120 VOLT/1 PHASE POWER.
	EFW-1	GUARDIAN	G1893	RIGHT HAND DECK MOUNTED, ALL STAINLESS STEEL CONSTRUCTION, CORROSION RESISTANT, 90° SWIVEL EYEWASH LESS BOWL WITH ½" U.S. MADE STAINLESS STEEL STAY-OPEN BALL VALVE, AND STAINLESS STEEL FLAG HANDLE. UNIT SHALL HAVE (2) POLYPROPYLENE GS-PLUS SPRAY HEADS WITH INTEGRAL "FLIP-TOP" DUST COVERS, FILTERS AND 1.6 GPM FLOW CONTROL ORIFICES MOUNTED ON STAINLESS STEEL HEAD ASSEMBLY. PROVIDE WITH G6020 THERMOSTATIC MIXING VALVE.
	ES-1	GUARDIAN	G1996	CORROSION RESISTANT, ALL STAINLESS STEEL CONSTRUCTION, COMBINATION EYE/FACE WASH AND SHOWER SAFETY STATION WITH STAINLESS STEEL SHOWER HEAD, INTERNAL 20 GPM FLOW CONTROL, STAINLESS STEEL EYE/FACE WASH BOWL, AND STAINLESS STEEL FLAG HANDLE AND FLOOR FLANGE. 1¼" IPS SCHEDULE 40 STAINLESS STEEL PIPE AND FITTINGS, 1" IPS AND ½" IPS U.S. MADE STAINLESS STEEL STAY-OPEN BALL VALVES, AND POLISHED STAINLESS STEEL PULL ROD. UNIT SHALL HAVE (2) POLYPROPYLENE FS-PLUS SPRAY HEADS WITH INTEGRAL "FLIP-TOP" DUST COVERS, FILTERS, AND 3.2 GPM FLOW CONTROL ORIFICES MOUNTED ON A STAINLESS STEEL HEAD ASSEMBLY.
	EWC-1	ELKAY	LVRCGRNTL8WSK	EZH2O BOTTLE FILLING STATION WITH ELECTRIC WATER COOLER. PROVIDE COMPLETE WITH SAFETY BUBBLER, STAINLESS STEEL FINISH, MOUNTING BRACKET, AND ALL SUPPLIES AND STOPS. PROVIDE ACCESS PANEL FOR CONNECTIONS WITHIN WALL. MOUNTING SHALL COMPLY WITH T.A.S. GUIDELINES.
	FCO	JAY R. SMITH	4141S (TILE); 4221S(CONCRETE)	FLOOR CLEAN OUT: CAST IRON BODY, ROUND ADJUSTABLE SECURED NICKEL BRONZE COVER, BRONZE PLUG, GASKET SEAL.
	FD-1	JAY R. SMITH	2005A	DUCO CAST IRON FLOOR DRAIN WITH REVERSIBLE FLASHING COLLAR, SEEPAGE OPENINGS AND ADJUSTABLE SQUARE NICKEL BRONZE STRAINER HEAD. SIZE OUTLET TO FIT ASSOCIATED SANITARY PIPING SHOWN ON PLANS. PROVIDE WITH TRAP SEAL WHERE TRAP PRIMER IS NOT NOTED. PROVIDE TRAP PRIMER CONNECTION ON DRAIN BODIES NOTED ON PLANS.
	FS-1	JAY R. SMITH	3100	CAST IRON FLANGED RECEPTOR WITH SEEPAGE HOLES, ACID RESISTANT COATED INTERIOR, NICKEL BRONZE RIM, AND SECURED GRATE
	GCO	JAY R. SMITH	4251S	EXTERIOR CLEANOUT: CAST IRON BODY, DOUBLE FLANGED HOUSING, HEAVY-DUTY SECURED SCORIATED CAST IRON COVER WITH LIFTING RING, BRONZE PLUG, GASKET SEAL.
	HB-1	WOODFORD	B24P-3/4	CONCEALED BOX TYPE NON-FREEZE HOSE BIBB WITH HARDENED STAINLESS STEEL STEM, COMPLETE WITH TEE KEY AND ANTI-SIPHON VACUUM BREAKER, CHROME FINISH, 3/4" INLET, AND 3/4" HOSE CONNECTION.
	HB-2	WOODFORD	24CP	ANTI-SIPHON VACUUM BREAKER, CHROME FINISH, 3/4" INLET, AND 3/4" HOSE CONNECTION.
	L-1	BRADLEY	LVAD1	SINGLE STATION LAVATORY COMPLETE WITH P-TRAP, SUPPLIES, STOPS, BRADLEY MODEL S53-3100 HARDWIRED SENSOR LAVATORY FAUCET WITH 0.5 GPM SPRAY HEAD, INTEGRAL SIDE MIXER LEVER, BOX TRANSFORMER, AND BRASS GRID STRAINER DRAIN. MOUNTING TO COMPLY WITH T.A.S. GUIDELINES. MIXING VALVE TO BE SET TO 0.2 HOT WATER GPM MIN.
	L-2	BRADLEY	LVAD2	DOUBLE STATION LAVATORY SYSTEM COMPLETE WITH P-TRAP, SUPPLIES, STOPS, BRADLEY MODEL S53-3100 HARDWIRED SENSOR LAVATORY FAUCET WITH 0.5 GPM SPRAY HEAD, INTEGRAL SIDE MIXER LEVER, BOX TRANSFORMER, AND BRASS GRID STRAINER DRAIN. MOUNTING TO COMPLY WITH T.A.S. GUIDELINES.

PLUMBING FIXTURE SCHEDULE

TYPE IMAGE	MARK	MFG	MODEL	DESCRIPTION
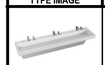	L-3	BRADLEY	LVAD3	TRIPLE STATION LAVATORY SYSTEM COMPLETE WITH P-TRAP, SUPPLIES, STOPS, BRADLEY MODEL S53-3100 HARDWIRED SENSOR LAVATORY FAUCET WITH 0.5 GPM SPRAY HEAD, INTEGRAL SIDE MIXER LEVER, BOX TRANSFORMER, AND BRASS GRID STRAINER DRAIN. MOUNTING TO COMPLY WITH T.A.S. GUIDELINES.
	MB-1	STERN WILLIAMS	HL-2100	TERAZZO MOP BASIN WITH CAST BRASS DRAIN BODY, STAINLESS STEEL STRAINER, AND STAINLESS STEEL CAPS ON THRESHOLD. PROVIDE FAUCET EQUAL TO CHICAGO FAUCETS 540-LD897SWXF317CP, COMPLETE WITH VACUUM BREAKER, 2 GPM AERATOR, INTEGRAL STOPS, ADJUSTABLE WALL BRACE, PAIL HOOK AND 3/4" HOSE THREADS. PROVIDE FLEXIBLE RUBBER HOSE EQUAL TO STERN WILLIAMS MODEL T-35 (MIN. OF 36" LONG) WITH 3/4" CHROME COUPLINGS. PROVIDE MOP HOLDER MOUNTED ABOVE MOP SINK. PROVIDE SPLASH CATCHER PANELS OF 20 GA. TYPE 304 STAINLESS STEEL.
	NFHB-1	WOODFORD	B65	CONCEALED BOX TYPE NON-FREEZE HOSE BIBB WITH HARDENED STAINLESS STEEL STEM, COMPLETE WITH TEE KEY AND ANTI-SIPHON VACUUM BREAKER, CHROME FINISH, 3/4" INLET, AND 3/4" HOSE CONNECTION.
	PW-1	HOTSY	944N	NATURAL GAS FIRED 3 GPM PRESSURE WASHER. WITH 3FT. HAND HELD GUN, 50 FT. HOSE WITH QUICK CONNECT, AND NOZZLE STORAGE. PROVIDE WITH DOWN DRAFT DIVERTER. DIVERTER SHALL BE INSTALLED 3 FEET FROM EQUIPMENT.
	RPZ-1	WATTS	LF909OSY	2-1/2" REDUCED PRESSURE ZONE ASSEMBLY COMPLETE WITH EPOXY COATED CASTIRON, STRAINER, SEATED GATE VALVES, AND TEST COCKS; SEAT DISCS SHALL BE REPLACEABLE; RELIEF VALVE SEATS SHALL BE REPLACEABLE. PROVIDE WITH AIR GAP AND PIPING DOWN TO FLOOR DRAIN.
	S-1	ELKAY	ELUHAD321655	"LUSTERTONE" 18 GAUGE, TYPE 304 STAINLESS STEEL, 5-3/8" DEEP DOUBLE COMPARTMENT UNDERMOUNT SINK COMPLETE WITH UNDERSIDE COATING TO INSULATE FOR SOUND AND REDUCE CONDENSATION, GRID STRAINER, P-TRAP, SUPPLIES, AND STOPS. THE DRAIN SHALL BE PUNCHED IN CENTER REAR. PROVIDE FAUCET EQUAL TO AMERICAN STANDARD "BEALE" MODEL 4931.300 COMPLETE WITH POLISHED CHROME PLATED FINISH, 8-1/8" RADIUS SWING GOOSENECK SPOUT, 2-3/8" ADA LEVER HANDLE AND 1.5 GPM TWO FUNCTION PULL-DOWN SPRAY HEAD COMPLETE WITH TWO INTEGRAL CHECK VALVES. MOUNTING SHALL COMPLY WITH T.A.S. GUIDELINES.
	S-2	ELKAY	ELUHAD281655	"LUSTERTONE" 18 GAUGE, TYPE 304 STAINLESS STEEL, 5-3/8" DEEP SINGLE COMPARTMENT UNDERMOUNT SINK COMPLETE WITH UNDERSIDE COATING TO INSULATE FOR SOUND AND REDUCE CONDENSATION, GRID STRAINER, P-TRAP, SUPPLIES, AND STOPS. THE DRAIN SHALL BE PUNCHED IN CENTER REAR. PROVIDE FAUCET EQUAL TO AMERICAN STANDARD "COLONY PRO" MODEL 7074.551 COMPLETE WITH POLISHED CHROME PLATED FINISH, 8" RADIUS SWING GOOSENECK SPOUT, LEVER HANDLES, 1.5 GPM AERATOR, AND COLOR-MATCHED SIDE SPRAY. MOUNTING SHALL COMPLY WITH T.A.S. GUIDELINES.
	S-3	ELKAY	ELUHH3017TT	"LUSTERTONE" 18 GAUGE, TYPE 304 STAINLESS STEEL, 9" DEEP SINGLE COMPARTMENT UNDERMOUNT SINK COMPLETE WITH UNDERSIDE COATING TO INSULATE FOR SOUND AND REDUCE CONDENSATION, GRID STRAINER, P-TRAP, SUPPLIES, AND STOPS. THE DRAIN SHALL BE PUNCHED IN CENTER REAR. PROVIDE FAUCET EQUAL TO AMERICAN STANDARD "COLONY PRO" MODEL 7074.551 COMPLETE WITH POLISHED CHROME PLATED FINISH, 8" RADIUS SWING GOOSENECK SPOUT, LEVER HANDLES, 1.5 GPM AERATOR, AND COLOR-MATCHED SIDE SPRAY.
	S-4	ELKAY	B1C18X18X	STAINLESS STEEL 21" X 21-1/2" X 44" 18 GAUGE ONE COMPARTMENT BUDGET SINK STAINLESS STEEL LEGS. PROVIDE WITH CHICAGO FAUCET MODEL 631-E35RABCP WITH A 1.5 GPM AERATOR.
	SH-1	OASIS	SHFW-6235-ADA	62" BY 35" (60" BY 30" INTERIOR DIMENSION), ONE-PIECE GELCOATED FIBERGLASS, FLAT-WALL SHOWER STALL WITH 7/16-INCH HIGH MAXIMUM FINISHED THRESHOLD, FLOOR ATTACHMENT FLANGE, WALL SURROUND, AND CENTER DRAIN. PROVIDE WITH AMERICAN STANDARD TU052507 SHOWER, VALVE BODY, AND FLOOR DRAIN TO BE EQUAL TO FD-1.
	TD-1	ZURN	Z662	16 INCH SQUARE TOP DRAIN, DURA-COATED CAST IRON BODY WITH BOTTOM OUTLET, SEEPAGE PAN AND COMBINATION MEMBRANE FLASHING CLAMP AND FRAME FOR HEAVY-DUTY SLOTTED LOOSE GRATE WITH SUSPENDED SEDIMENT BUCKET. PROVIDE WITH TRAP SEAL.
	TD-2	ZURN	Z668-4NH	11-1/4" BY 19-1/4" TOP DRAIN, DURA-COATED CAST IRON BODY WITH BOTTOM OUTLET, LESS SEEPAGE PAN, WITH SECONDARY STRAINER, LOOSE HEAVY-DUTY SLOTTED GRATE. PROVIDE WITH TRAP SEAL.
	TPV-1	ZURN	Z1021	WATER SAVER TRAP PRIMER 1-1/2 INCH WALL CONNECTION

PLUMBING FIXTURE SCHEDULE

TYPE IMAGE	MARK	MFG	MODEL	DESCRIPTION
	TPV-2	ZURN	Z6000	TRAP PRIMER ASSEMBLY WITH 1-1/2" FLUSH TUBE WITH TRAP PRIMER COLLAR, SPUD COUPLING AND FLANGE FOR TOP SPUD CONNECTION, 3/8" X 12" SUPPLY TUBE FITTINGS, VACUUM BREAKER, VACUUM BREAKER TUBE NUT AND WALL ESCUTCHEON.
	U-1	KOHLER	K-5016-ET	"DEXTER" VITREOUS CHINA LOW CONSUMPTION URINAL COMPLETE WITH TOP SPUD, CARRIER FITTINGS AND 0.125 GPF SLOAN SOLIS MODEL 8186-0.125 FLUSH VALVE WITH PUSH BUTTON OVERRIDE. PROVIDE WITH ZURN MODEL Z1217 WALL URINAL CARRIER SYSTEM.
	U-2	KOHLER	K-5016-ET	"DEXTER" VITREOUS CHINA LOW CONSUMPTION URINAL COMPLETE WITH TOP SPUD, CARRIER FITTINGS AND 0.125 GPF SLOAN SOLIS MODEL 8186-0.125 FLUSH VALVE WITH PUSH BUTTON OVERRIDE. PROVIDE WITH ZURN MODEL Z1217 WALL URINAL CARRIER SYSTEM. MOUNTING SHALL COMPLY WITH T.A.S. GUIDELINES..
	WB-1	OATEY	38995	WALL BOX, COMPLETE WITH QUARTER TURN BRASS HAMMER BALL VALVES, COPPER SWEAT.
	WC-1	KOHLER	K-4325	"KINGSTON" WALL MOUNTED, VITREOUS CHINA, ELONGATED BOWL WATER CLOSET, WITH KOHLER MODEL K-4670-CA SEAT, AND 1.6/1.1 GPF SLOAN SOLIS MODEL 8111-1.6/1.1 FLUSH VALVE WITH PUSH BUTTON OVERRIDE. PROVIDE WITH ZURN MODEL ZN1202-N4 OR ZN1202-ND4 WATER CLOSET CARRIER SYSTEM.
	WC-2	KOHLER	K-4325	"KINGSTON" WALL MOUNTED, VITREOUS CHINA, ELONGATED BOWL WATER CLOSET, WITH KOHLER MODEL K-4670-CA SEAT, AND 1.6/1.1 GPF SLOAN SOLIS MODEL 8111-1.6/1.1 FLUSH VALVE WITH PUSH BUTTON OVERRIDE. PROVIDE WITH ZURN MODEL ZN1202-N4 OR ZN1202-ND4 WATER CLOSET CARRIER SYSTEM. MOUNTING SHALL COMPLY WITH T.A.S. GUIDELINES.
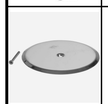	WCO	JAY R. SMITH	4710	WALL CLEANOUT: STAINLESS STEEL SHALLOW COVER WITH CENTER VANDAL PROOF SCREW.
	WHA-A	JAY R. SMITH	5005	WATER HAMMER ARRESTOR SHALL BE SIZED AND INSTALLED PER THE PLUMBING DRAINAGE INSTITUTE (STANDARD PDI-WH 201) REQUIREMENTS IN ACCESSIBLE LOCATIONS ON THE COLD WATER FLUSH VALVES AND ANY QUICK CLOSING VALVES.
	WHA-B	JAY R. SMITH	5010	WATER HAMMER ARRESTOR SHALL BE SIZED AND INSTALLED PER THE PLUMBING DRAINAGE INSTITUTE (STANDARD PDI-WH 201) REQUIREMENTS IN ACCESSIBLE LOCATIONS ON THE COLD WATER FLUSH VALVES AND ANY QUICK CLOSING VALVES.

PLUMBING FIXTURE CONNECTION SCHEDULE

DESIGNATION	FIXTURE	CW	HW	SAN
L	LAVATORY	1/2"	1/2"	1-1/2"
MB	MOP BASIN	3/4"	3/4"	2"
S	SINK	1/2"	1/2"	1-1/2"
U	URINAL	3/4"	-	1-1/2"
WC	WATER CLOSET	1"	-	4"

NOTES:
1. ABOVE SIZES ARE MINIMUM UNLESS OTHERWISE NOTED.
2. PITCH ALL DRAINAGE PIPING 2-1/2" AND SMALLER AT 1/4" PER FOOT; PITCH ALL DRAINAGE PIPING 3" AND LARGER AT 1/8" PER FOOT MINIMUM UNLESS OTHERWISE NOTED.
3. ALL UNDERGROUND DRAINAGE PIPING SHALL BE MINIMUM OF 2" IN SIZE, UNLESS OTHERWISE NOTED.

Texas Department of Transportation

COPYRIGHT © 2021

DFW Consulting Group, Inc.
1616 Corporate Court, Suite 100
Irving, Tx 75038
(972) 929-1199
www.dfwcgi.com
Project No. :20044
Firm Registration No. :720

KENNETH DAVID SIELINE 61722 REGISTERED PROFESSIONAL ENGINEER 04/21/2021

DALLAS DISTRICT (18)
COLLIN COUNTY
McKinney Area Engineering and Maintenance Facility
2205 TX-5, McKinney, TX 75069
PROJECT NO. 18-470420012

ISSUED: 2021.04.21
DRAWN BY: DFWCGI
REVISIONS:

PLUMBING SCHEDULES

P4.1

THIS DRAWING CREATED FOR PRODUCTION ON 22"x34" SHEET SIZE. DO NOT SCALE PRINTS.

CLOSED LOOP RECYCLE SYSTEM

MARK	TANK SIZE MAIN SEPARATOR L X W X H	OVERALL HEIGHT	HOLDING TANK CONTSRUCTION	MAX. FLOW RATE (GPM)	WEIGHT (LBS)	CENTRIFUGAL BASIN SUMP PUMP (HP/FLA)	COALESCING PACK MATERIAL	DRAIN OFF OIL CAPACITY (GAL)	TOTAL OPERATING OIL CAPACITY (GAL)	TOTAL FLUID CAPACITY (GAL)	DUAL FILTER BAG CANISTERS (MICRONS)	SKID MOUNT DIMENSTION	SKID MOUNT CONSTRUCTION	CENTRIFUGAL FILTER PUMP (HP/FLA)	PRESSURE BLADDER CAPACITY (GAL)	FULL LOAD AMPS	MOCP	UNIT VOLTS/PH/HZ	MFG	MODEL	NOTES
CLWR-1	4'6" X 4' X 7'6"	8'9"	3/16" STEEL PLATE	22	6600	3/4 / 5.1	GALVANIZED STEEL	51	150	680	25 MICRON	7' X 12'	8" CHANNEL W/ 7-GAUGE STEEL PLATE	3/4 / 8.2	85	16.3	30	240/1	TAYLOR ENVIRONMENTAL PRODUCTS, INC.	CLLV	

AIR COMPRESSOR SCHEDULE (OWNER FURNISHED CONTRACTOR INSTALLED)

MARK	TYPE	CFM	OPERATING PRESSURE (PSI)	HP	VOLTS/PH	MFG	MODEL	NOTES
AC-1	80 GALLON VERTICAL	24	90	7.5	220/3	INGERSOLL RAND	2475N7.5	

INSTANTANEOUS WATER HEATER SCHEDULE

MARK	TEMPERATURE SETTING (°F)	CAPACITY (W)	ACTIVATION GPM	TEMPERATURE RISE		VOLTS/PH	MFG	MODEL	NOTES
				.5 GPM	1 GPM				
IWH-1	104	6240	0.20	70	43	208/1	CHRONOMITE	CMI-30L	2,4
IWH-2	104	6240	0.20	70	43	208/1	CHRONOMITE	CMI-30L	2,4
IWH-3	104	6240	0.20	70	43	208/1	CHRONOMITE	CMI-30L	2,4
IWH-4	110	8320	0.20	70	57	208/1	CHRONOMITE	CMI-40L	2,4
IWH-5	110	8320	0.20	70	57	208/1	CHRONOMITE	CMI-40L	2,4
IWH-6	104	6240	0.20	70	43	208/1	CHRONOMITE	CMI-30L	2,4
IWH-7	104	6240	0.20	70	43	208/1	CHRONOMITE	CMI-30L	2,4
IWH-8	110	8320	0.20	70	57	208/1	CHRONOMITE	CMI-40L	1,2,3
IWH-9	120	24000	0.50	-	-	208/3	EE MAX	XTP024208	1,2,3
IWH-10	110	8320	0.20	70	57	208/1	CHRONOMITE	CMI-40L	1,2,3

NOTE:
1. PROVIDE WALL MOUNTING BRACKET.
2. PROVIDE TEMPERATURE ADJUST KNOB. CONTRACTOR TO SET PER OWNERS DIRECTION.
3. PROVIDE DISCONNECT.
4. PROVIDE INSIDE Z-C1616D WALL BOX WITH PRE-WIRED ELECTRICAL DISCONNECT

GAS WATER HEATER SCHEDULE

MARK	LOCATION	MBH	CAPACITY (GAL)	RECOVERY (GPH)	TEMP. RISE (°F)	ELECTRICAL VOLTS/PH	MFG	MODEL	REMARKS
GWH-1	-	76	50	95	90	120/1	A.O. SMITH	BTX-80	1, 2, 3, 4, 5, 6

NOTES:

1. WATER TO BE STORED AT 140°F.
2. PROVIDE ASME T&P RELIEF VALVE.
3. PROVIDE FIELD FABRICATED DRAIN PAN, ROUTE PAN DRAIN TO APPROVED DRAIN WITH MINIMUM 6" AIR GAP.
4. PROVIDE EXPANSION TANK SIMILAR OR EQUAL TO A.O. SMITH PMC-5.
5. PROVIDE WITH A. O. SMITH MODEL 9006328005 CONCENTRIC VENT KIT OR SIMILAR.
6. NATURAL GAS OPERATING RANGE FROM 4.0" OF WC TO 14.0" OF WC

SAND-OIL INTERCEPTOR SCHEDULE

MARK	CAPACITY (GAL)	OIL CAPACITY (GAL)	GRIT CAPACITY (LBS)	FLOW RATE (GPM)	EMPTY WEIGHT (LBS)	MFG	MODEL	REMARKS
SO-1	500	250	2950	50	9500	PARK USA	GO-500	1, 2, 3

NOTES:
1. CONTRACTOR TO VEIFY HEIGHT OF EXTENSIONS REQUIRED PRIOR TO ORDER.
2. PROVIDE WITH SAMPLE WELL.
3. ALL FRAME AND COVERS ARE TO BE TRAFFIC RATED.

Texas Department of Transportation

COPYRIGHT © 2021

DFW Consulting Group, Inc.
1616 Corporate Court, Suite 100
Irving, Tx 75038
(972) 929-1199
www.dfwcgi.com
Project No. :20014
Firm Registration No. :720

KENNETH DAVID MELINE
61722
REGISTERED PROFESSIONAL ENGINEER
04/21/2021

DALLAS DISTRICT (18)
COLLIN COUNTY
McKinney Area Engineering and Maintenance Facility
2205 TX-5, McKinney, TX 75069
PROJECT NO. 18-470420012

ISSUED: 2021.04.21
DRAWN BY: DFWCGI
REVISIONS:

PLUMBING SCHEDULES

P4.2

THIS DRAWING CREATED FOR PRODUCTION ON 22"x34" SHEET SIZE. DO NOT SCALE PRINTS.

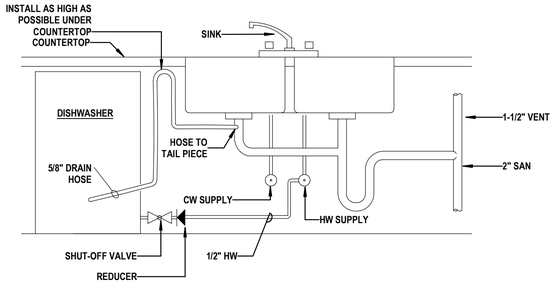

12 DISHWASHER/DISPOSAL AND SINK DETAIL
SCALE: NONE

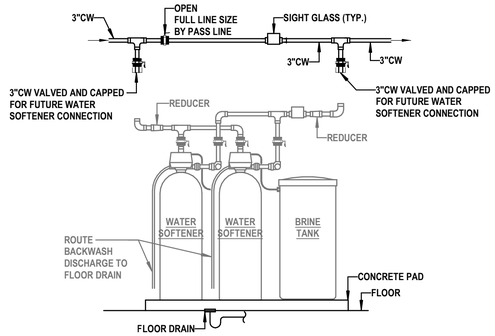

08 DUPLEX WATER SOFTENER PIPING DETAIL
SCALE: NONE

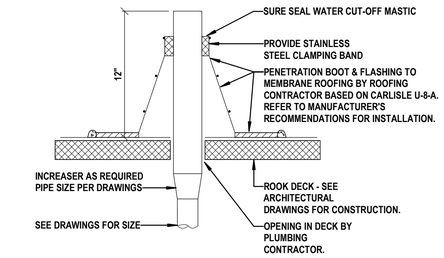

04 VENT THRU ROOF DETAIL
SCALE: NONE

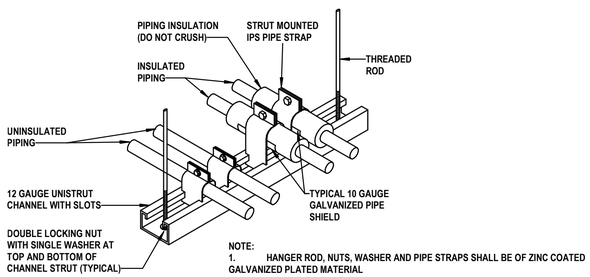

11 TRAPEZE PIPE SUPPORT DETAIL
SCALE: NONE

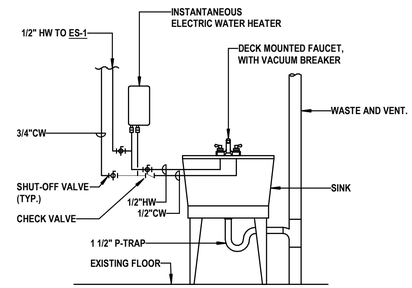

07 INSTANTANEOUS WH & SINK PIPING DETAIL
SCALE: NONE

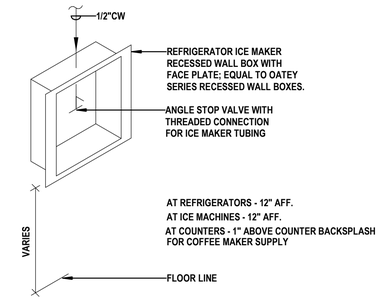

03 WALL BOX DETAIL
SCALE: NONE

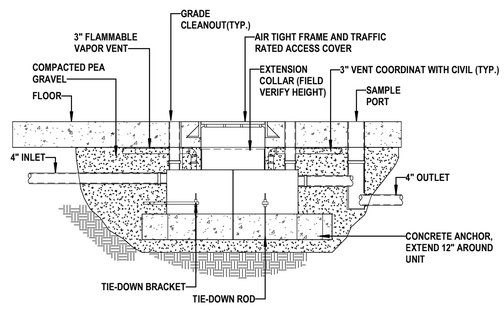

10 SAND/OIL INTERCEPTOR DETAIL
SCALE: NONE

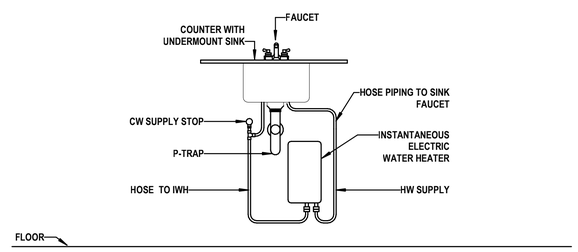

06 UNDER CABINET IWH PIPING DETAIL
SCALE: NONE

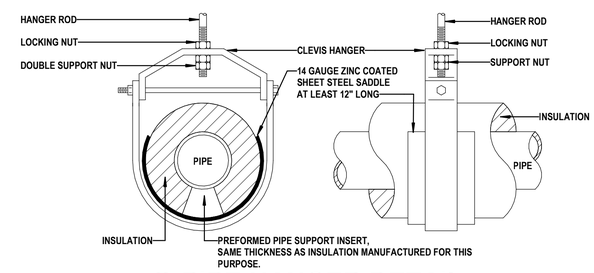

02 PIPE HANGER DETAIL
SCALE: NONE

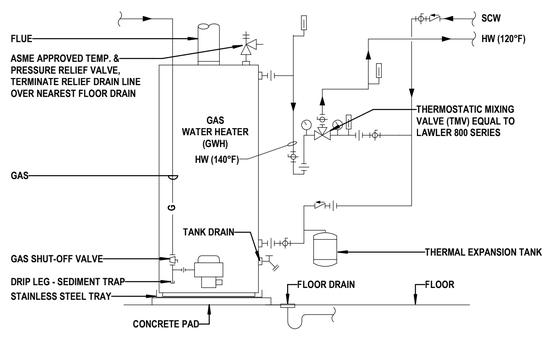

09 WATER HEATER PIPING DETAIL
SCALE: NONE

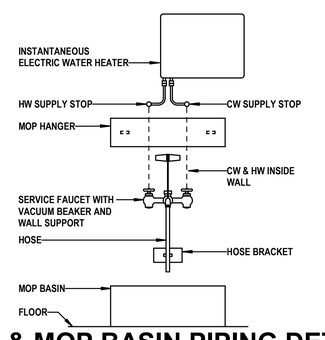

05 IWH & MOP BASIN PIPING DETAIL
SCALE: NONE

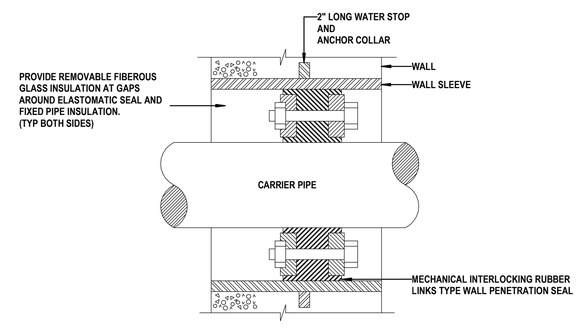

01 FLOOR/WALL SLEEVE DETAIL
SCALE: NONE

Texas Department of Transportation

COPYRIGHT © 2021

DFW Consulting Group, Inc.
1616 Corporate Court, Suite 100
Irving, Tx 75038
(972) 929-1199
www.dfwcgi.com
Project No. :20014
Firm Registration No. :720

KENNETH DAVID MELINE 61722 REGISTERED PROFESSIONAL ENGINEER 04/21/2021

DALLAS DISTRICT (18)
COLLIN COUNTY
McKinney Area Engineering and Maintenance Facility
2205 TX-5, McKinney, TX 75069
PROJECT NO. 18-470420012

ISSUED: 2021.04.21
DRAWN BY: DFWCGI
REVISIONS:

PLUMBING DETAILS

P5.1

THIS DRAWING CREATED FOR PRODUCTION ON 22"x34" SHEET SIZE. DO NOT SCALE PRINTS.

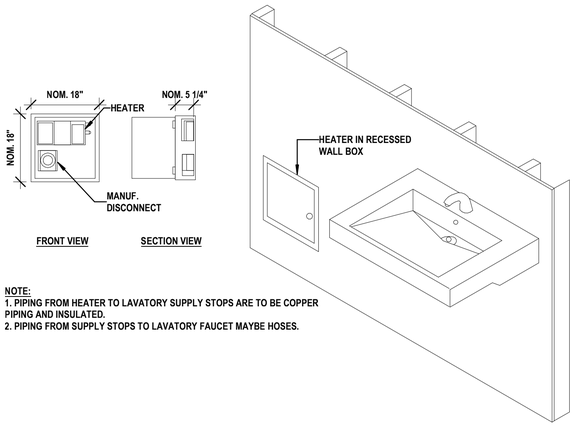

NOTE:
1. PIPING FROM HEATER TO LAVATORY SUPPLY STOPS ARE TO BE COPPER PIPING AND INSULATED.
2. PIPING FROM SUPPLY STOPS TO LAVATORY FAUCET MAYBE HOSES.

09 LAVATORY IWH IN WALL BOX DETAIL
SCALE: NONE

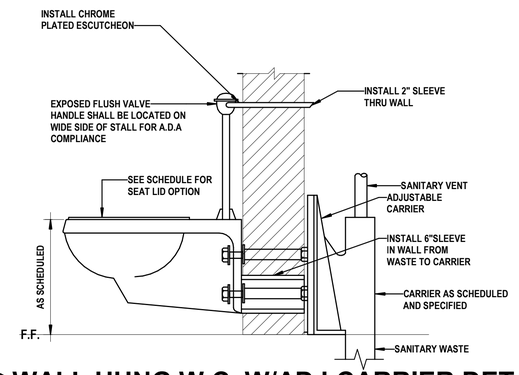

06 WALL HUNG W.C. W/ADJ CARRIER DETAIL
SCALE: NONE

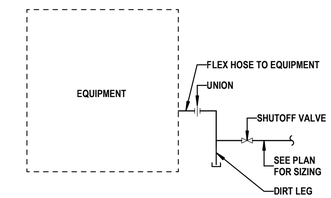

03 GAS CONNECTION AT EQUIPMENT DETAIL
SCALE: NONE

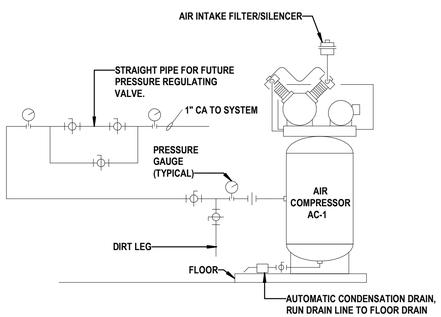

08 AIR COMPRESSOR PIPING
SCALE: 12" = 1'-0"

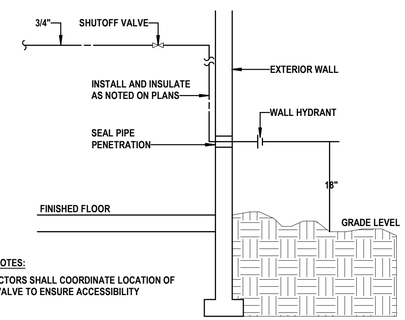

GENERAL NOTES:
1. CONTRACTORS SHALL COORDINATE LOCATION OF SHUT-OFF VALVE TO ENSURE ACCESSIBILITY

05 WALL HYDRANT DETAIL
SCALE: NONE

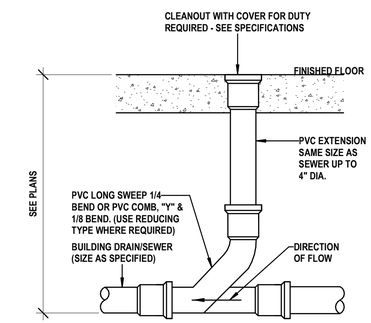

02 FLOOR CLEANOUT DETAIL
SCALE: NONE

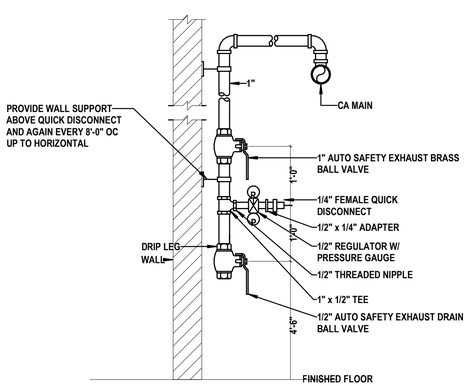

07 AIR DROP WITH QUICK DISCONNECT DETAIL
SCALE: NONE

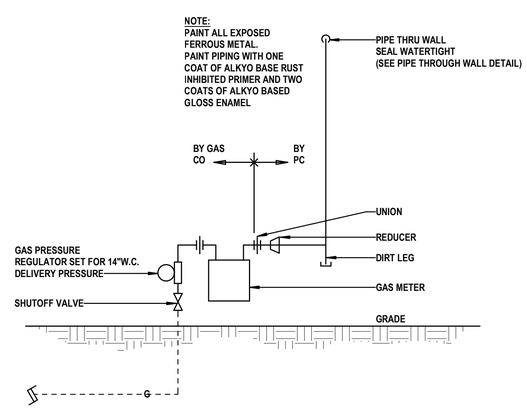

04 GAS METER
SCALE: NONE

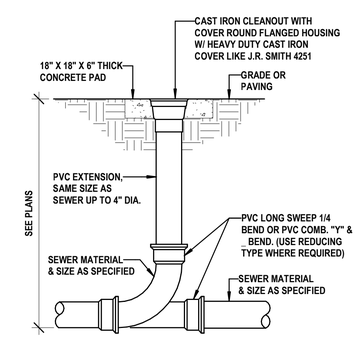

01 EXTERIOR CLEANOUT DETAIL
SCALE: NONE

Texas Department of Transportation
COPYRIGHT © 2021

DFW Consulting Group, Inc.
1616 Corporate Court, Suite 100
Irving, Tx 75038
(972) 929-1199
www.dfwcgi.com
Project No. :2004
Firm Registration No. :720

STATE OF TEXAS
KENNETH DAVID MELINE
61722
REGISTERED PROFESSIONAL ENGINEER
04/21/2021

DALLAS DISTRICT (18)
COLLIN COUNTY
McKinney Area Engineering and Maintenance Facility
2205 TX-5, McKinney, TX 75069
PROJECT NO. 18-470420012

ISSUED: 2021.04.21
DRAWN BY: DFWCGI
REVISIONS:

PLUMBING DETAILS

P5.2

THIS DRAWING CREATED FOR PRODUCTION ON 22"x34" SHEET SIZE DO NOT SCALE PRINTS.

ABBREVIATIONS

ABV	ABOVE
ADA	AMERICANS WITH DISABILITIES ACT
AD	AREA DRAIN
AFF	ABOVE FINISHED FLOOR
AL	ALUMINUM
AI	ANALOG INPUT
AO	ANALOG OUTPUT
APD	AIR PRESSURE DROP
AST	ABOVE GROUND STORAGE TANK
BAS	BUILDING AUTOMATION SYSTEM
BFF	BELOW FINISHED FLOOR
BFP	BACKFLOW PREVENTER
BDD	BACKDRAFT DAMPER
BHP	BRAKE HORSEPOWER
BOD	BOTTOM OF DUCT
BOE	BOTTOM OF EQUIPMENT
BTU	BRITISH THERMAL UNIT
BTUH	BRITISH THERMAL UNIT PER HOUR
C	CONDUIT
CA	COMPRESSED AIR
CB	CIRCUIT BREAKER
CD	CONDENSATE DRAIN
CFM	CUBIC FEET PER MINUTE
CFS	CUBIC FEET PER SECOND
CLG	CEILING
CHR	CHILLED WATER RETURN
CHS	CHILLED WATER SUPPLY
CO	CLEANOUT
CR	CONDENSER WATER RETURN
CS	CONDENSER WATER SUPPLY
CW	DOMESTIC COLD WATER
CU	COPPER
DB	DRY BULB
DCO	DOUBLE CLEANOUT
DI	DIGITAL INPUT
DN	DOWN
DO	DIGITAL OUTPUT
DT	DAY TANK
(E)	EXISTING
EAG	EXHAUST AIR GRILLE/REGISTER
EAT	ENTERING AIR TEMPERATURE
E.C.	EMPTY CONDUIT
EFF	EFFICIENCY
EPO	EMERGENCY POWER OFF
ERV	ENERGY RECOVERY VENTILATION
ESP	EXTERNAL STATIC PRESSURE
EWC	ELECTRIC WATER COOLER
EWH	ELECTRIC WATER HEATER
EWT	ENTERING WATER TEMPERATURE
EXH.	EXHAUST
(F)	FUTURE
°F	DEGREES FARENHEIT
FCO	FLOOR CLEANOUT
FD	FIRE DAMPER
FDC	FIRE DEPARTMENT CONNECTION
FDS	FUSED DISCONNECT SWITCH
FLA	FULL LOAD AMPS
FLD	FLOOR DRAIN
FL	FLOW LINE
FO	FLAT OVAL DUCT
FOR	FUEL OIL RETURN
FOS	FUEL OIL SUPPLY
FP	FIRE PROTECTION WATER
FPI	FINS PER INCH
FPM	FEET PER MINUTE
FSD	COMBINATION FIRE SMOKE DAMPER
FT	FEET
FU	FIXTURE UNITS
FV	FACE VELOCITY
G	GAS
GCO	GRADE CLEANOUT
GE	GENERAL EXHUAST
GFI	GROUND FAULT INTERUPTER
GM	GAS METER
GND	GROUND
GPH	GALLONS PER HOUR
GPM	GALLONS PER MINUTE
GRS	GALVANIZED RIGID STEEL
GW	GREASY WASTE
GWH	GAS WATER HEATER
H	HUMIDITY SENSOR
HB	HOSE BIBB
HD	HUB DRAIN
HG	REFRIGERANT HOT GAS
HI	HARDWIRE INTERLOCK
HP	HORSEPOWER
HR	HEATING HOT WATER RETURN
HS	HEATING HOT WATER SUPPLY
HS	HIGH STATIC SENSOR
HW	DOMESTIC HOT WATER
HWC	DOMESTIC HOT WATER RECIRCULATION
HX	HEAT EXCHANGER
IG	ISOLATED GROUND
IWH	INSTANTANEOUS WATER HEATER
IW	INDIRECT WASTE
IWV	INDIRECT WASTE VENT
KW	KILOWATT
L	LAVATORY
LAT	LEAVING AIR TEMPERATURE
LE	LAB EXHAUST
LBS	POUNDS
MATV	MASTER ANTENNA TELEVISION SYSTEM
MB	MOP BASIN
MBH	THOUSANDS OF BTUS PER HOUR
MCA	MINIMUM CIRCUIT AMPS
MFG	MANUFACTURER
MOCP	MAXIMUM OVERCURRENT PROTECTION
MOD	MOTORIZED DAMPER
MTD	MOUNTED
NC	NOISE CRITERIA
NIC	NOT IN CONTRACT
N3R	NEMA 3R
O	OXYGEN
OA	OUTSIDE AIR
OBD	OPPOSED BLADE DAMPER
OCD	OVERFLOW CONDENSATION
OCPD	OVERCURRENT PROTECTIVE DEVICE
OFCI	OWNER FURNISHED CONTRACTOR INSTALLED
OFD	OVERFLOW ROOF DRAIN
OSD	OVERFLOW STORM DRAIN
PBD	PARALLEL BLADE DAMPER
PH	PHASE
PP	POWER POLE
PSI	POUNDS PER SQUARE INCH
PSIG	POUNDS PER SQUARE INCH (GAGE)
PVC	POLYVINYL CHLORIDE PIPE
(R)	RELOCATED
RA	RETURN AIR
RABL	RETURN AIR BOOT (L-SHAPED)
RABU	RETURN AIR BOOT (U-SHAPED)
RAG	RETURN AIR GRILLE/REGISTER
RD	ROOF DRAIN
RL	REFRIGERANT LIQUID
RPM	REVOLUTIONS PER MINUTE
RPZ	REDUCED PRESSURE ZONE
RS	REFRIGERANT SUCTION
RTU	ROOFTOP UNIT
S	SINK
SA	SUPPLY AIR
SAG	SUPPLY AIR GRILLE/REGISTER
SAN	SANITARY SEWER
SD	STORM DRAIN
SF	SQUARE FEET
SMD	SMOKE DAMPER
SP	STATIC PRESSURE
SPD	STATIC PRESSURE DROP
T	TEMPERATURE SENSOR
TPV	TRAP PRIMER VALVE
TPD	TOTAL PRESSURE DROP
TP	TOTAL PRESSURE
TW	DOMESTIC TEMPERED WATER
U	URINAL
UF	UNDERFLOOR
UG	UNDERGROUND
U.N.O	UNLESS NOTED OTHERWISE
V	VENT
VAC	VACUUM
VFD	VARIABLE FREQUENCY DRIVE
VIF	VERIFY IN FIELD
VTR	VENT THROUGH ROOF
W	SANITARY WASTE
WB	WET BULB
WC	WATER CLOSET
WCO	WALL CLEANOUT
WP	WEATHER PROOF
WPD	WATER PRESSURE DROP
WSHP	WATER-SOURCE HEAT PUMP
"WC	INCHES WATER COLUMN
"WG	INCHES WATER GAUGE
WM	WALL MOUNTED
XFMR	TRANSFORMER

MECHANICAL AND PLUMBING SYMBOLS

	DOMESTIC COLD WATER PIPING
	DOMESTIC HOT WATER PIPING
	DOMESTIC HOT WATER RECIRCULATION PIPING
	SANITARY VENT PIPING
CA	COMPRESSED AIR PIPING
CD	CONDENSATE DRAIN PIPING
CHEM	CHEMICAL TREATMENT PIPING
CHR	CHILLED WATER RETURN PIPING
CHS	CHILLED WATER SUPPLY PIPING
CR	CONDENSER WATER SUPPLY PIPING
CS	CONDENSER WATER RETURN PIPING
DW	DRINKING WATER PIPING
F	FIRE PROTECTION PIPING
FOR	FUEL OIL RETURN PIPING
FOS	FUEL OIL SUPPLY PIPING
FOV	FUEL OIL VENT PIPING
GAS	NATURAL GAS PIPING
GW	GREASY WASTE PIPING
HG	REFRIGERANT HOT GAS PIPING
HPC	HIGH PRESSURE STEAM CONDENSATE PIPING
HPS	HIGH PRESSURE STEAM PIPING
HR	HEATING HOT WATER RETURN PIPING
HS	HEATING HOT SUPPLY PIPING
LPC	LOW PRESSURE STEAM CONDENSATE PIPING
LPS	LOW PRESSURE STEAM PIPING
MUW	MAKE-UP WATER PIPING
OSD	OVERFLOW STORM DRAIN PIPING
PCD	PUMPED COOLING COIL CONDESATE DRAIN PIPING
PCHR	PRIMARY CHILLED WATER RETURN PIPING
PCHS	PRIMARY CHILLED WATER SUPPLY PIPING
PHR	PRIMARY HEATING HOT WATER RETURN PIPING
PHS	PRIMARY HEATING HOT SUPPLY WATER PIPING
RL	REFRIGERANT LIQUID PIPING
RS	REFRIGERANT SUCTION PIPING
SAN	SANITARY WASTE PIPING
SCHR	SECONDARY CHILLED WATER RETURN PIPING
SCHS	SECONDARY CHILLED WATER SUPPLY PIPING
SHR	SECONDARY HEATING HOT WATER RETURN PIPING
SHS	SECONDARY HEATING HOT WATER SUPPLY PIPING
SD	STORM DRAIN PIPING
TW	TEMPERED DOMESTIC WATER PIPING
D	CHANGE OF ELEVATION - RISE (R) DROP (D)
	EXISTING DUCT
	EXISTING DUCT TO BE REMOVED
	NEW DUCT
	INDICATES DIRECTION OF AIRFLOW
	DUCT TURNED UP, NEGATIVE PRESSURE. FIRST FIGURE IS TOP DIMENSION
	DUCT TURNED UP, POSITIVE PRESSURE. FIRST FIGURE IS TOP DIMENSION
	EXHAUST DUCT SECTION UP
	RETURN DUCT SECTION UP
	SUPPLY DUCT SECTION UP
	EXHAUST DUCT SECTION DOWN
	RETURN DUCT SECTION DOWN
	SUPPLY DUCT SECTION DOWN
BDD	BACKDRAFT DAMPER
FD	HORIZONTAL FIRE DAMPER
FD	VERTICAL FIRE DAMPER
FSD	HORIZONTAL FIRE/SMOKE DAMPER
FSD	VERTICAL FIRE/SMOKE DAMPER
SD	HORIZONTAL SMOKE DAMPER
SD	VERTICAL SMOKE DAMPER
	MANUAL VOLUME DAMPER
	DUCT CAP
M	MOTORIZED DAMPER
	CEILING DIFFUSER
	CEILING EXHAUST/RETURN GRILLE
	SIDEWALL GRILLE OR REGISTER
	SLOT DIFFUSER OR GRILLE
	CAP
	PIPE TURNED DOWN
	PIPE TURNED UP
	PIPE ELBOW
	PIPE CROSS
	PIPE TEE
	COMBINATION WYE AND EIGHTH BEND
	PIPE TEE BOTTOM CONNECTION
	PIPE TEE UP
	PIPE TEE TOP CONNECTON
	PIPE FLANGE
	PIPE UNION
	CONCENTRIC PIPE REDUCER
	ECCENTRIC PIPE REDUCER
	PIPE STRAINER
	CLEANOUT PLUG
	TRAP
	AUTOMATIC BUTTERFLY VALVE
	ANGLE VALVE
	BALANCING VALVE
	BALL VALVE
	BUTTERFLY VALVE
	CALIBRATED BALANCING VALVE
	CHECK VALVE
	GAS COCK
	GATE VALVE
	GLOBE VALVE
	HOT TAP
	NEEDLE VALVE
	PLUG VALVE
	PRESSURE REDUCING VALVE
	PRESSURE REGULATOR
	REGULATOR
	PRESSURE RELIEF VALVE
	SOLENOID VALVE
	THERMOSTATIC MIXING VALVE
	THREE WAY CONTROL VALVE
	TWO WAY CONTROL VALVE
	TAMPER SWITCH VAVLE
	VALVE MOUNTED IN VERTICAL
	TRAP PRIMER VALVE
	WATER HAMMER ARRESTER
	HOSE BIBB
	P-TRAP
	PENETRATION
CO2	CARBON DIOXIDE SENSOR
	CONNECT NEW TO EXISTING
DPS	DIFFERENTIAL PRESSURE SENSOR (V.N.O)
FM	FLOW METER
	FLOW METER
	FULL ENCIRCLEMENT TEE
	HUMIDISTAT
H	HUMIDITY SENSOR
HYD	HYDROGEN SENSOR
	PRESSURE GAUGE
	PUMP
	PUMP
	ROUND
	THERMOMETER
	SLOPED PIPING
	SPRINKLER HEAD
SP	STATIC PRESSURE SENSOR
T	TEMPERATURE SENSOR
	TEMPERATURE WELL
	THERMOSTAT
VFD	VARIABLE FREQUENCY DRIVE CONTROLLER
	WATER HAMMER ARRESTER
DIFFUSER, REGISTER, GRILLE TAG	A 10"Ø / 200 — SCHEDULE DESIGNATION, NECK SIZE, AIR QUANTITY (CFM)
TERMINAL UNIT TAG	VAV-1 / 2000 — SCHEDULE DESIGNATION, AIR QUANTITY (CFM)
CO/NO2	CARBON MONOXIDE / NITROGEN DIOXIDE

BASIS OF DESIGN

CODES:
MECHANICAL: 2018 INTERNATIONAL MECHANICAL CODE, WITH AMENDMENTS
ELECTRICAL: 2020 NATIONAL ELECTRICAL CODE, WITH AMENDMENTS
PLUMBING: 2018 INTERNATIONAL PLUMBING CODE, WITH AMENDMENTS
ENERGY: 2018 INTERNATIONAL ENERGY CODE, WITH AMENDMENTS
VENTILATION: 2016 ASHRAE 62.1

EXTERIOR BUILDING DESIGN:

WALL "U" VALUE:	0.123 BTUH/SQ.FT. DEG. F
ROOF "U" VALUE:	0.039 BTUH/SQ.FT. DEG. F
GLASS "U" VALUE:	0.500 BTUH/SQ.FT. DEG. F
GLASS "SHADING COEFFICIENT" VALUE:	0.287
GLASS SOLAR HEAT GAIN COEFFICIENT:	87% OF SHADING COEFFICIENT
OUTSIDE DESIGN SUMMER:	105 DEG. F DB / 78 DEG. F WB
OUTSIDE DESIGN WINTER:	17 DEG. F DB

MECHANICAL SYSTEM DESIGN:

THE NEW BUILDING WILL BE SERVED BY A NEW DEDICATED OUTDOOR AIR SYSTEM DUCTED TO ZONED INDOOR DX FAN COIL UNITS. EACH FAN COIL UNIT WILL HAVE ELECTRIC HEAT AS A BACKUP OPTION TO THE OUTDOOR HEAT PUMP. EACH HEAT PUMP/CONDENSING UNIT WILL HAVE AN INVERTER DRIVEN TWIN ROTARY COMPRESSOR TO MODULATE CAPACITY. THREE HEAT PUMP UNITS WILL BE MULTI-ZONE SYSTEMS SERVING SEVERAL INDOOR FAN COIL UNITS. ALL HVAC EQUIPMENT WILL HAVE STANDALONE CONTROLLERS.

PROJECT SPECIFIC DESIGN ASSUMPTIONS:
INDOOR DESIGN SUMMER : 72 DEG. F DB
INDOOR DESIGN WINTER : 70 DEG. F DB

OUTSIDE AIR REQUIREMENT: BASED ON ASHRAE STD 62.1

WATTS PER SQUARE FOOT LIGHTING (OFFICE SPACE): 1.1 WATTS/SF

PRICING NOTES

THE ENTIRE SCOPE OF THE CONTRACTORS WORK IS SHOWN THROUGHOUT THE ENTIRE SET OF DOCUMENTS. IT SHALL BE EACH CONTRACTOR'S RESPONSIBILITY TO THOROUGHLY REVIEW THE ENTIRE SET OF DOCUMENTS INCLUDING, BUT NOT LIMITED TO, THE ENTIRE MECHANICAL, ELECTRICAL, PLUMBING, ARCHITECTURAL, STRUCTURAL, CIVIL, AND AUDIO/VISUAL DOCUMENTS AND INCLUDE ALL SCOPE IN THE CONTRACTORS RESPONSIBILITY EVEN IF IT IS NOT SHOWN DIRECTLY ON THEIR RESPECTIVE TRADES' DOCUMENTS.

THE CONTRACTOR'S BID PRICE SHALL INCLUDE ALL PARTS AND ITEMS NECESSARY FOR A COMPLETE WORKING SYSTEM, EVEN IF EVERY PART IS NOT DOCUMENTED IN THE DRAWINGS.

INCLUDE THE FOLLOWING ITEMS IN THE PRICING SCOPE:

WHERE NOT NOTED, PROVIDE A 3/4 INCH CONDENSATE DRAIN FROM EACH FAN COIL UNIT TO THE NEAREST APPROVED DRAIN.

Texas Department of Transportation
COPYRIGHT © 2021

DFW Consulting Group, Inc.
1616 Corporate Court, Suite 100
Irving, Tx 75038
(972) 929-1199
www.dfwcgi.com
Project No. :20044
Firm Registration No. :720

KENNETH DAVID MELINE
61722
REGISTERED PROFESSIONAL ENGINEER
04/21/2021

DALLAS DISTRICT (18)
COLLIN COUNTY
McKinney Area Engineering and Maintenance Facility
2205 TX-5, McKinney, TX 75069
PROJECT NO. 18-470420012

ISSUED: 2021.04.21
DRAWN BY: DFWCGI
REVISIONS:

MECHANICAL LEGENDS & ABBREVIATION

M0.1

THIS DRAWING CREATED FOR PRODUCTION ON 22"x34" SHEET SIZE. DO NOT SCALE PRINTS.

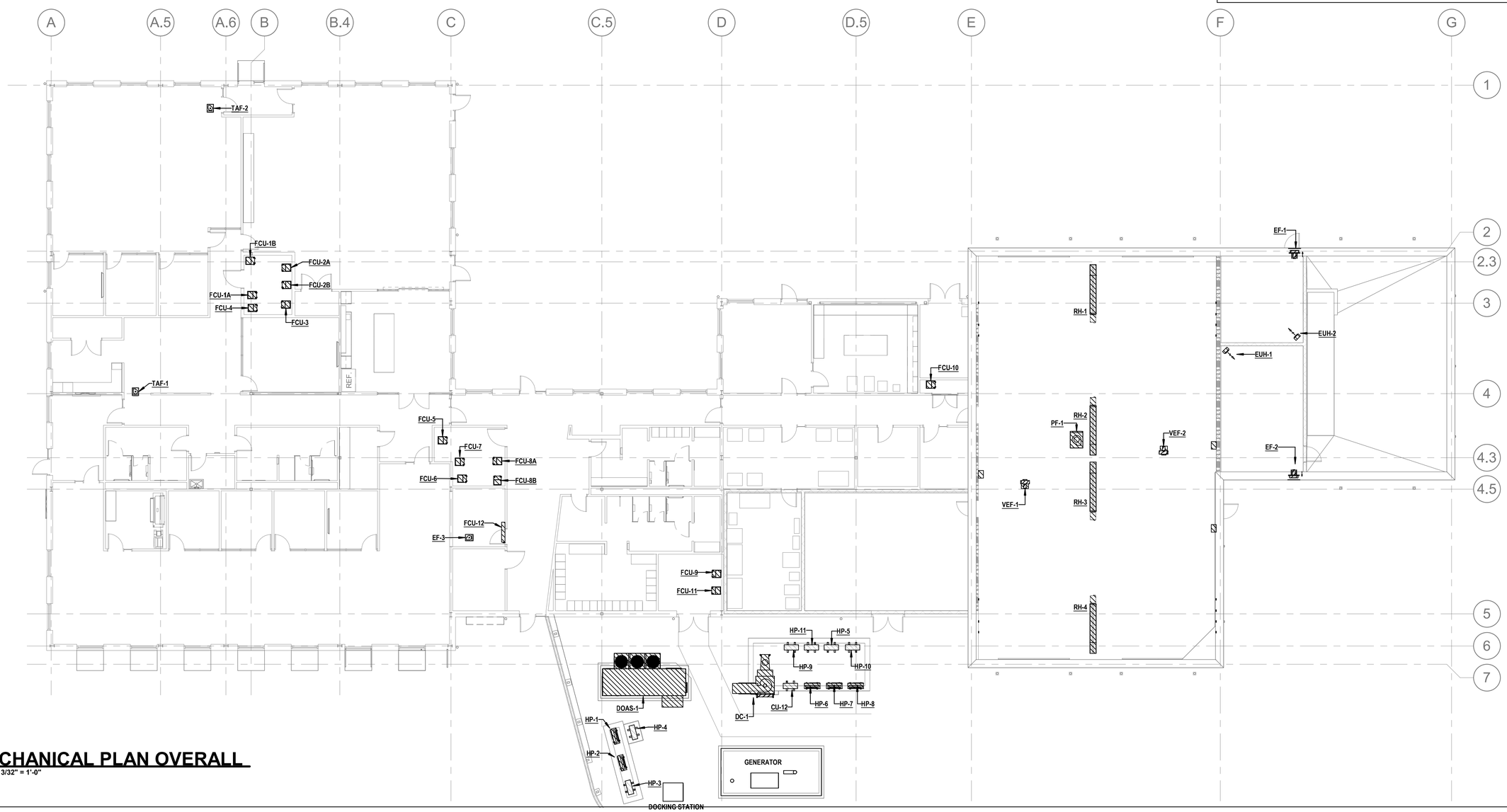

01 MECHANICAL PLAN OVERALL

SCALE: 3/32" = 1'-0"

KEYPLAN

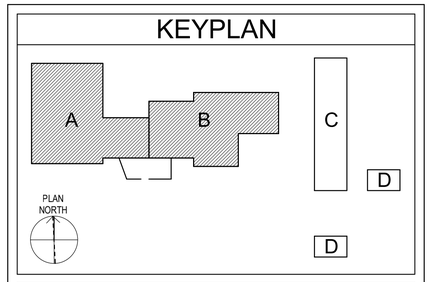

SCALES

3/32" = 1'-0"

16' 8' 0' 8' 16' 24'

Texas Department of Transportation

COPYRIGHT © 2021

DFW Consulting Group, Inc.
1616 Corporate Court, Suite 100
Irving, Tx 75038
(972) 929-1199
www.dfwcgi.com
Project No. :20014
Firm Registration No. :720

STATE OF TEXAS
KENNETH DAVID SAELINE
61722
REGISTERED PROFESSIONAL ENGINEER
04/21/2021

DALLAS DISTRICT (18)
COLLIN COUNTY
McKinney Area Engineering and Maintenance Facility
2205 TX-5, McKinney, TX 75069
PROJECT NO. 18-470420012

ISSUED: 2021.04.21
DRAWN BY: DFWCGI
REVISIONS:

MECHANICAL PLAN OVERALL

M2.1

THIS DRAWING CREATED FOR PRODUCTION ON 22"x34" SHEET SIZE DO NOT SCALE PRINTS.

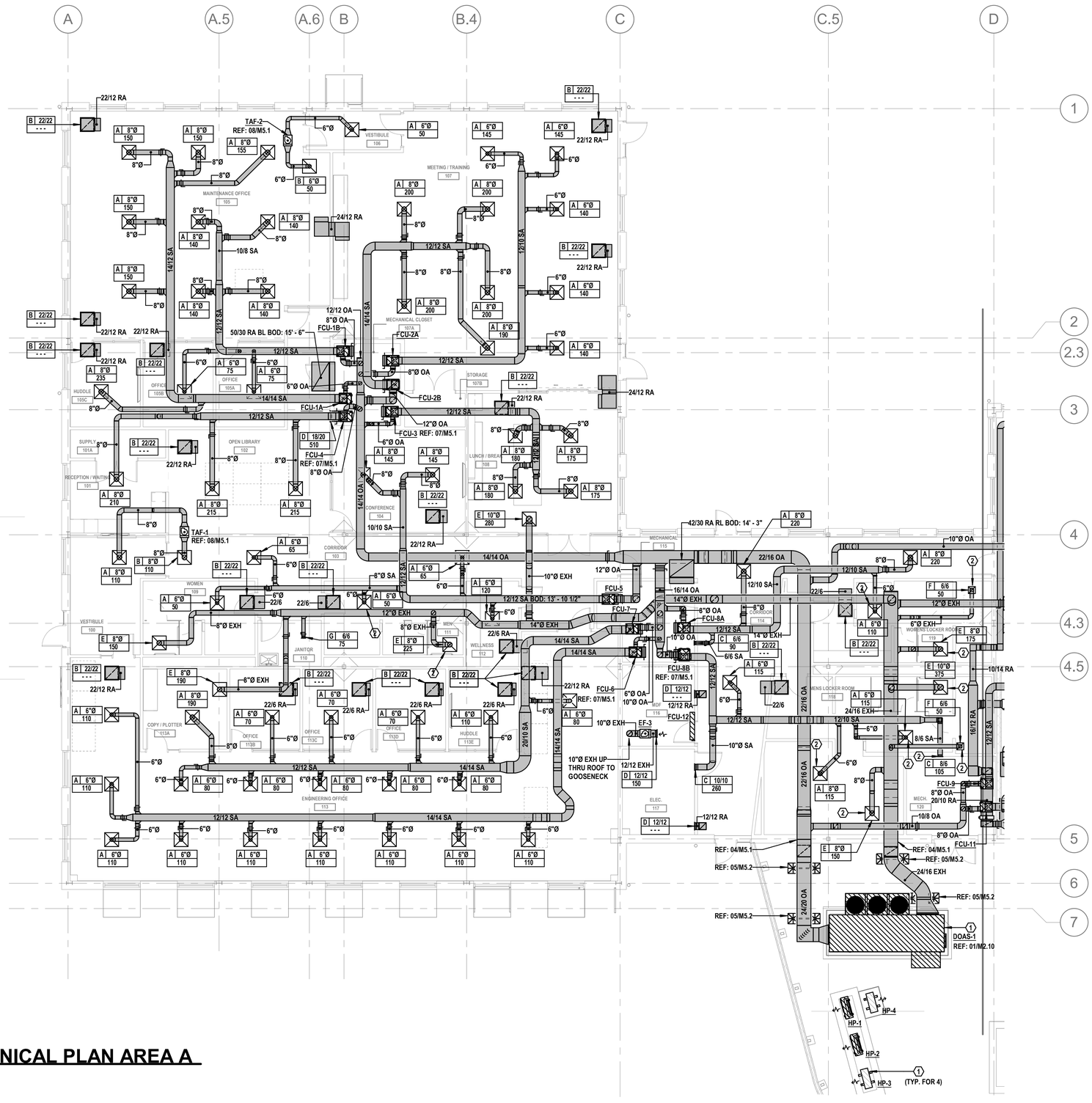

01 MECHANICAL PLAN AREA A

SCALE: 1/8" = 1'-0"

KEYPLAN

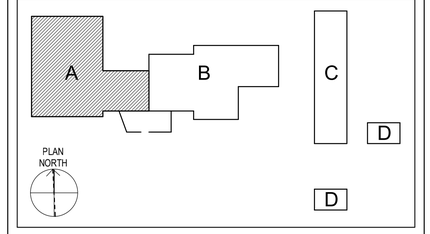

SCALES

1/8" = 1'-0"

8' 6' 4' 2' 0' 4' 8' 16'

GENERAL NOTES - MECHANICAL

1	PROVIDE MANUAL VOLUME DAMPERS AT ALL SUPPLY, OUTSIDE, AND EXHAUST AIR RUN OUT DUCT.
2	DUCT SIZES SHOWN ON PLAN ARE FREE AREA SIZES. ADJUST SHEETMETAL SIZE TO ACCOUNT FOR ANY INTERNAL LINER OR INSULATION.
3	ALL ADHESIVES, COVERINGS, INSULATION, JACKETS, MASTICS, AND SEALER SHALL BE PLENUM RATED, HAVING A FLAME-SPREAD INDEX OF 25 OR LESS, AND SMOKE-DEVELOPED INDEX OF 50 OR LESS, AS REQUIRED BY CODE."

KEYED NOTES BY SYMBOL "⬡"

1	EQUIPMENT TO BE MOUNTED ON STRUCTURAL PROVIDED HOUSEKEEPING PAD.
2	PROVIDE INTEGRAL BALANCING DAMPER.

Texas Department of Transportation
COPYRIGHT © 2021

DFW Consulting Group, Inc.
1616 Corporate Court, Suite 100
Irving, Tx 75038
(972) 929-1199
www.dfwcgi.com
Project No. :20014
Firm Registration No. :720
STATE OF TEXAS
KENNETH DAVID MELINE
61722
REGISTERED PROFESSIONAL ENGINEER
04/21/2021

DALLAS DISTRICT (18)
COLLIN COUNTY
McKinney Area Engineering and Maintenance Facility
2205 TX-5, McKinney, TX 75069
PROJECT NO. 18-470420012

ISSUED: 2021.04.21
DRAWN BY: DFWCGI
REVISIONS:

MECHANICAL PLAN AREA A

M2.2

THIS DRAWING CREATED FOR PRODUCTION ON 22"x34" SHEET SIZE. DO NOT SCALE PRINTS.

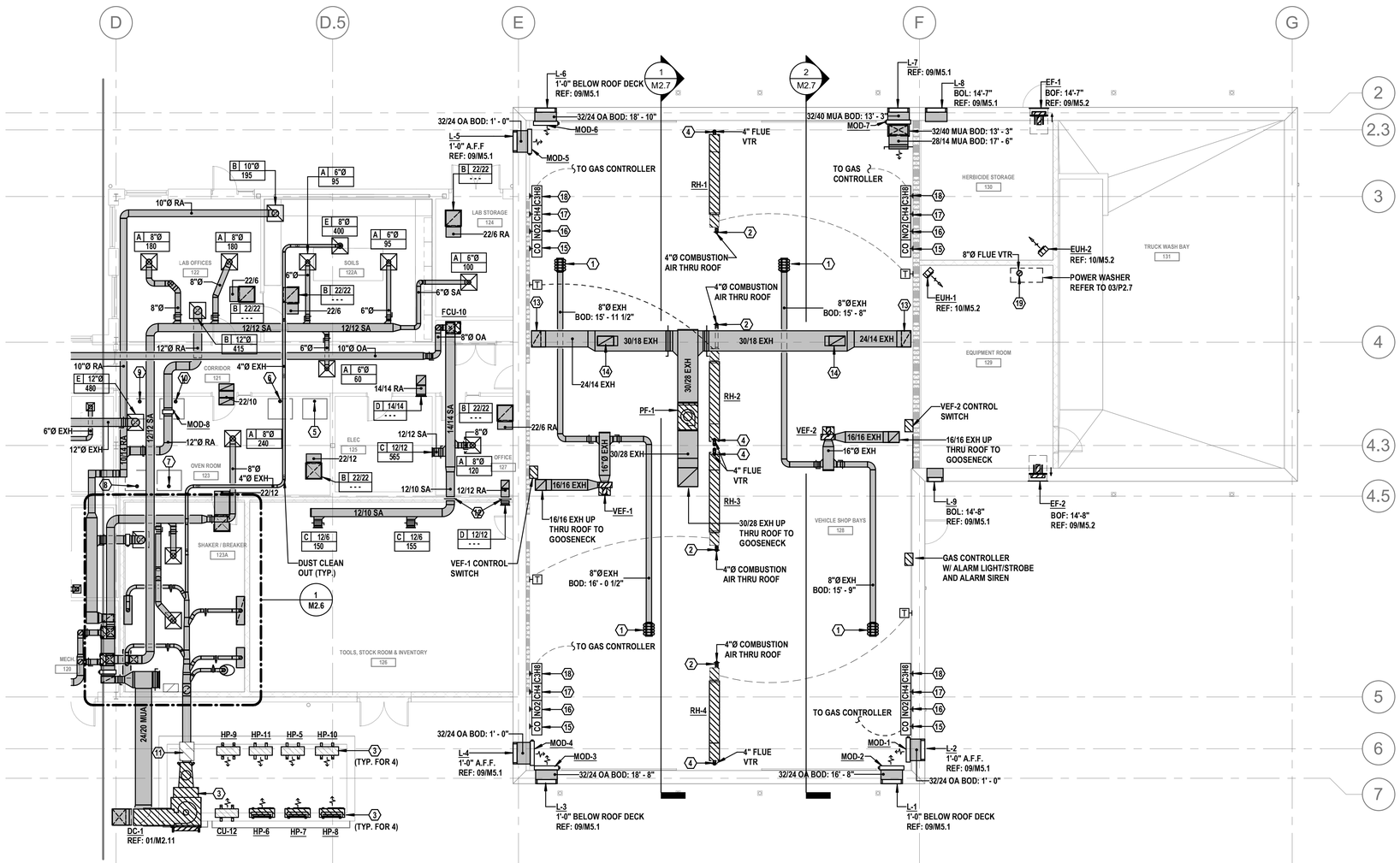

01 MECHANICAL PLAN AREA B

SCALE: 1/8" = 1'-0"

KEYPLAN

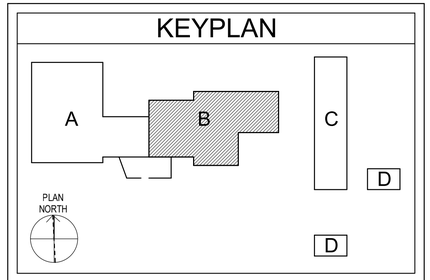

SCALES

1/8" = 1'-0"

8' 6' 4' 2' 0' 4' 8' 16'

GENERAL NOTES - MECHANICAL

1	PROVIDE MANUAL VOLUME DAMPERS AT ALL SUPPLY, OUTSIDE, AND EXHAUST AIR RUN OUT DUCT.
2	DUCT SIZES SHOWN ON PLAN ARE FREE AREA SIZES. ADJUST SHEETMETAL SIZE TO ACCOUNT FOR ANY INTERNAL LINER OR INSULATION.
3	ALL ADHESIVES, COVERINGS, INSULATION, JACKETS, MASTICS, AND SEALER SHALL BE PLENUM RATED, HAVING A FLAME-SPREAD INDEX OF 25 OR LESS, AND SMOKE-DEVELOPED INDEX OF 50 OR LESS, AS REQUIRED BY CODE."

KEYED NOTES BY SYMBOL "⬡"

1	PROVIDE CAR-MON MODEL TSR-S36 EXHAUST TUBE STORAGE REEL, WITH 7"Ø x 25 FT TYPE HTC FLEX HOSE, AND EXHAUST ADAPTER & FLANGE SET.
2	RADIANT HEATER COMBUSTION AIR INTAKE SHALL TERMINATE WITH APPROVED CAP EQUAL TO ROBERT GORDON PART NUMBER 90502300, OR EQUAL.
3	EQUIPMENT TO BE MOUNTED ON STRUCTURAL PROVIDED HOUSEKEEPING PAD.
4	RADIANT HEATER FLUE EXHAUST VENT SHALL TERMINATE WITH APPROVED CAP EQUAL TO ROBERT GORDON PART NUMBER 90502300, OR EQUAL.
5	PROVIDE 3" OVEN EXHAUST FLEXIBLE STAINLESS STEEL TUBING THRU ROOF WITH RAIN CAP, TO BARNSTEAD INTERNATIONAL OVEN (#6); MODEL NO: F85930; REF:04/M5.2.
6	PROVIDE 4" OVEN DOUBLE WALL STAINLESS STEEL EXHAUST THRU ROOF WITH RAIN CAP, TO DESPATCH OVEN (#5); MODEL NO: LAC1-67-6; REF:04/M5.2.
7	PROVIDE 4" OVEN DOUBLE WALL STAINLESS STEEL EXHAUST THRU ROOF WITH RAIN CAP, TO DESPATCH OVEN D(#4); MODEL NO: LAC1-67-6; REF:04/M5.2.
8	PROVIDE 4" OVEN DOUBLE WALL STAINLESS STEEL EXHAUST THRU ROOF WITH RAIN CAP, TO QUINCY LAB BENCH SERIES OVEN C(#3); MODEL NO:21-250ER-1; REF:04/M5.2.
9	PROVIDE 4" OVEN DOUBLE WALL STAINLESS STEEL EXHAUST THRU ROOF WITH RAIN CAP, TO QUINCY LAB BENCH SERIES OVEN B(#2); MODEL NO:31-350ER-1; REF:04/M5.2.
10	PROVIDE 4" OVEN DOUBLE WALL STAINLESS STEEL EXHAUST THRU ROOF WITH RAIN CAP, TO QUINCY LAB BENCH SERIES OVEN A(#1); MODEL NO:21-250ER-1; REF:04/M5.2.
11	PROVIDE 12" BLOW BACK DAMPER EQUAL TO AIREX INDUSTRIES MODEL BL-11, OR APPROVED EQUAL.
12	PROVIDE TORNADO DAMPER AT ROOM PENETRATION EQUAL TO GREEENHECK MODEL HTOD.
13	BOTTOM OF EXHAUST DUCT SHALL BE 1'-0" A.F.F. PROVIDE 1/2"x 1/2" HARDWARE MESH SCREEN AT INTAKE OF EXHAUST DUCT AND BALANCING DAMPER. BALANCE EXHAUST AIRFLOW TO 2250 CFM.
14	TOP OF EXHAUST DUCT SHALL BE 1'-0" BELOW ROOF. PROVIDE 1/2"x 1/2" HARDWARE MESH SCREEN AT INTAKE OF EXHAUST DUCT AND BALANCING DAMPER. BALANCE EXHAUST AIRFLOW TO 2250 CFM.
15	MOUNT CARBON MONOXIDE (CO) SENSOR 5 FEET A.F.F.; PROVIDE TAMPER-PROOF SCREWS, VANDAL-RESISTANT STEEL WIRE GUARD, POWER TRANSFORMER, HORNS, AND STROBES.
16	MOUNT NITROGEN DIOXIDE (NO2) SENSOR 5 FEET A.F.F.; PROVIDE TAMPER-PROOF SCREWS, VANDAL-RESISTANT STEEL WIRE GUARD, POWER TRANSFORMER, HORNS, AND STROBES.
17	MOUNT METHANE (CH4) SENSOR 1 FEET BELOW ROOF DECK; PROVIDE TAMPER-PROOF SCREWS, VANDAL-RESISTANT STEEL WIRE GUARD, POWER TRANSFORMER, HORNS, AND STROBES.
18	MOUNT PROPANE (C3H8) SENSOR 6 INCHES A.F.F.; PROVIDE TAMPER-PROOF SCREWS, VANDAL-RESISTANT STEEL WIRE GUARD, POWER TRANSFORMER, HORNS, AND STROBES.
19	8"Ø DOUBLE WALL STAINLESS STEEL FLUE VENT. INSTALL DIVERTER PER POWER WASHER MANUFACTURER RECOMMENDATIONS. CONTRACTOR SHALL CONFIRM FLUE VENT MATERIAL TYPE WITH POWER WASHER MANUFACTURER RECOMMENDATIONS.

Texas Department of Transportation
COPYRIGHT © 2021

DFW Consulting Group, Inc.
1616 Corporate Court, Suite 100
Irving, Tx 75038
(972) 929-1199
www.dfwcgi.com
Project No. :2004
Firm Registration No. :720
KENNETH DAVID DIELINE
61722
REGISTERED PROFESSIONAL ENGINEER
04/21/2021

DALLAS DISTRICT (18)
COLLIN COUNTY
McKinney Area Engineering and Maintenance Facility
2205 TX-5, McKinney, TX 75069
PROJECT NO. 18-470420012

ISSUED: 2021.04.21
DRAWN BY: DFWCGI
REVISIONS:

MECHANICAL PLAN AREA B

M2.3

THIS DRAWING CREATED FOR PRODUCTION ON 22"x34" SHEET SIZE
DO NOT SCALE PRINTS.

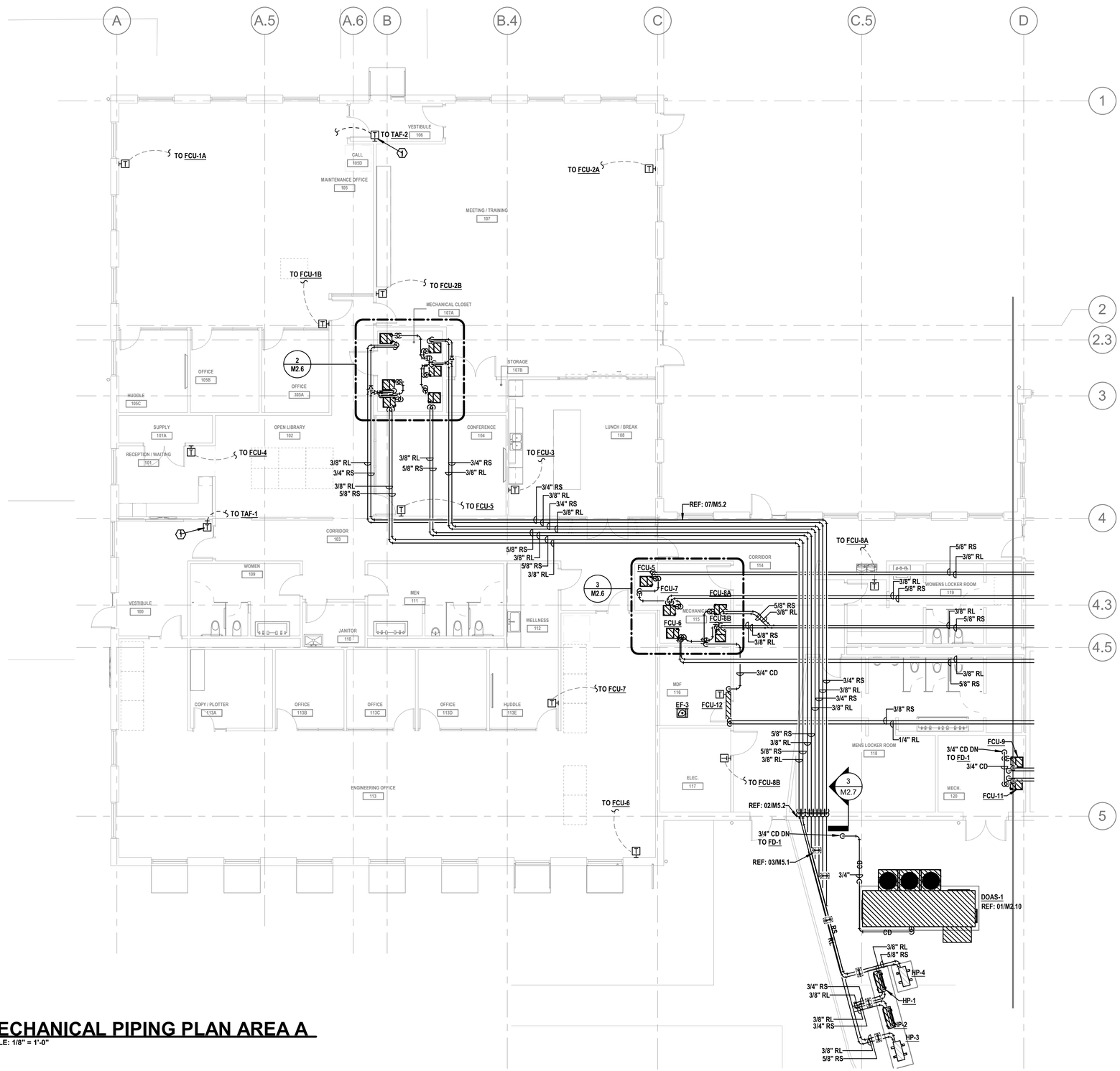

01 MECHANICAL PIPING PLAN AREA A

SCALE: 1/8" = 1'-0"

KEYPLAN

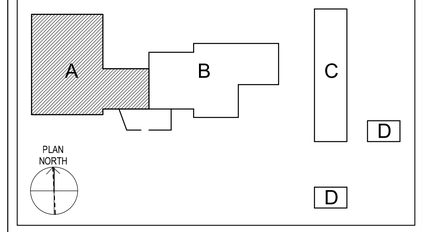

SCALES

1/8" = 1'-0"

8' 6' 4' 2' 0' 4' 8' 16'

GENERAL NOTES - MECHANICAL PIPING

1 REFRIGERANT ROUTING IS DEPICTED FOR DIAGRAMATIC PURPOSE. PROVIDE REFRIGERANT PIPE SIZE & ROUTING PER MANUFACTURER'S RECOMMENDATIONS.

KEYED NOTES BY SYMBOL "⬡"

1 7-DAY PROGRAMMABLE LINE-VOLTAGE THERMOSTAT.

Texas Department of Transportation
COPYRIGHT © 2021

DFW Consulting Group, Inc.
1616 Corporate Court, Suite 100
Irving, Tx 75038
(972) 929-1199
www.dfwcgi.com
Project No. :20014
Firm Registration No. :720

STATE OF TEXAS
KENNETH DAVID MELINE
61722
REGISTERED PROFESSIONAL ENGINEER
04/21/2021

DALLAS DISTRICT (18)
COLLIN COUNTY
McKinney Area Engineering and Maintenance Facility
2205 TX-5, McKinney, TX 75069
PROJECT NO. 18-47042001 2

ISSUED: 2021.04.21
DRAWN BY: DFWCGI
REVISIONS:

MECHANICAL PIPING PLAN AREA A

M2.4

THIS DRAWING CREATED FOR PRODUCTION ON 22"x34" SHEET SIZE DO NOT SCALE PRINTS.

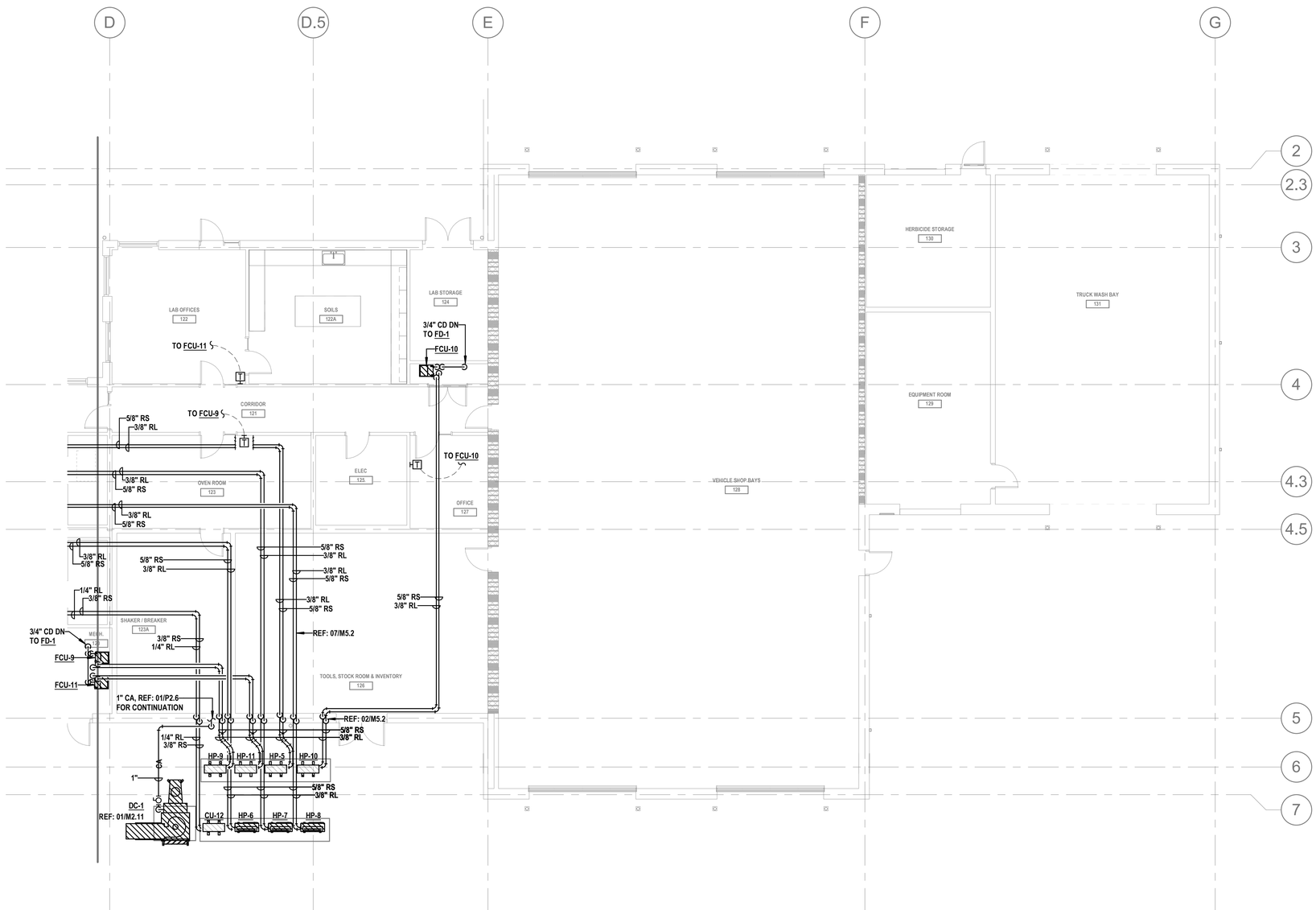

01 MECHANICAL PIPING PLAN AREA B

SCALE: 1/8" = 1'-0"

KEYPLAN

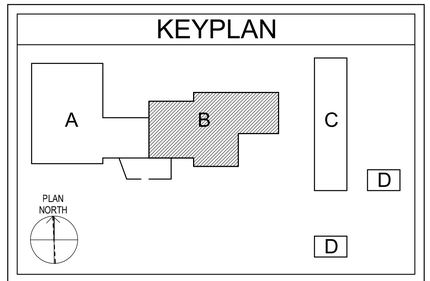

SCALES

1/8" = 1'-0"

8' 6' 4' 2' 0' 4' 8' 16'

GENERAL NOTES - MECHANICAL PIPING

1	REFRIGERANT ROUTING IS DEPICTED FOR DIAGRAMATIC PURPOSE. PROVIDE REFRIGERANT PIPE SIZE & ROUTING PER MANUFACTURER'S RECOMMENDATIONS.

Texas Department of Transportation

COPYRIGHT © 2021

DFW Consulting Group, Inc.
1616 Corporate Court, Suite 100
Irving, Tx 75038
(972) 929-1199
www.dfwcgi.com
Project No. :20044
Firm Registration No. :720

STATE OF TEXAS
KENNETH DAVID SIELINE
61722
REGISTERED PROFESSIONAL ENGINEER
04/21/2021

DALLAS DISTRICT (18)
COLLIN COUNTY
McKinney Area Engineering and Maintenance Facility
2205 TX-5, McKinney, TX 75069
PROJECT NO. 18-470420012

ISSUED: 2021.04.21
DRAWN BY: DFWCGI
REVISIONS:

MECHANICAL PIPING PLAN AREA B

M2.5

THIS DRAWING CREATED FOR PRODUCTION ON 22"x34" SHEET SIZE DO NOT SCALE PRINTS.

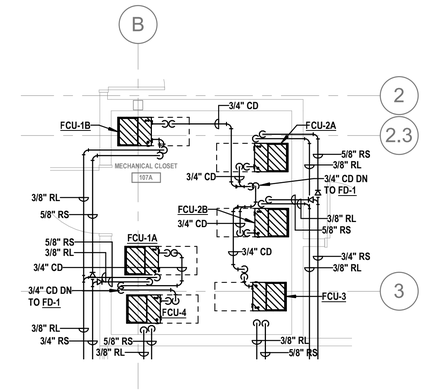

02 MECHANICAL CLOSET 107A ENLARGED PIPING PLAN

SCALE: 1/4" = 1'-0"

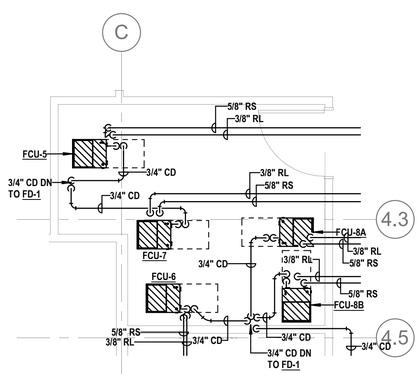

03 MECHANICAL 115 ENLARGED PIPING PLAN

SCALE: 1/4" = 1'-0"

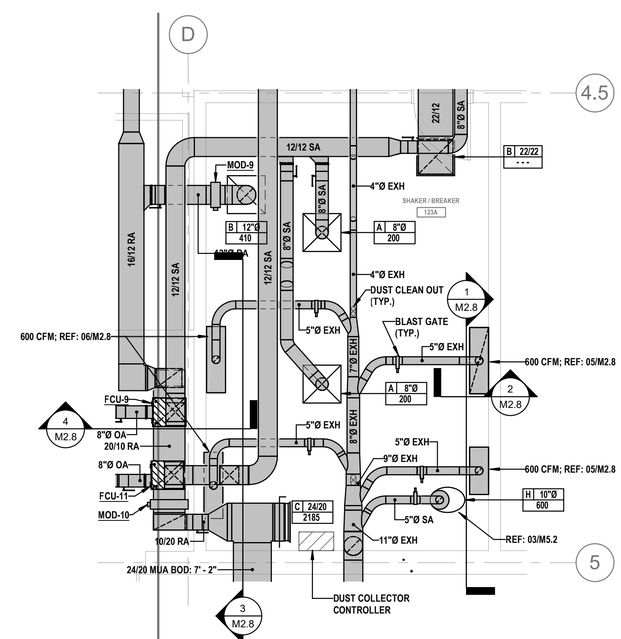

01 SHAKER / BREAKER 123A ENLARGED PLAN

SCALE: 1/4" = 1'-0"

Texas Department of Transportation

COPYRIGHT © 2021

DFW Consulting Group, Inc.
1616 Corporate Court, Suite 100
Irving, Tx 75038
(972) 929-1199
www.dfwcgi.com
Project No. :20044
Firm Registration No. :720

KENNETH DAVID MELINE
61722
REGISTERED PROFESSIONAL ENGINEER
04/21/2021

DALLAS DISTRICT (18)
COLLIN COUNTY
McKinney Area Engineering and Maintenance Facility
2205 TX-5, McKinney, TX 75069
PROJECT NO. 18-470420012

ISSUED: 2021.04.21
DRAWN BY: DFWCGI
REVISIONS:

ENLARGED MECHANICAL PLANS

M2.6

THIS DRAWING CREATED FOR PRODUCTION ON 22"x34" SHEET SIZE DO NOT SCALE PRINTS.

KEYED NOTES BY SYMBOL "⬡"

1	RADIANT HEATER COMBUSTION AIR INTAKE SHALL TERMINATE WITH APPROVED CAP EQUAL TO ROBERT GORDON PART NUMBER 90502300, OR EQUAL.
2	PROVIDE CAR-MON MODEL TSR-S36 EXHAUST TUBE STORAGE REEL, WITH 7"Ø x 25 FT TYPE HTC FLEX HOSE, AND EXHAUST ADAPTER & FLANGE SET.
3	RADIANT HEATER FLUE EXHAUST VENT SHALL TERMINATE WITH APPROVED CAP EQUAL TO ROBERT GORDON PART NUMBER 90502300, OR EQUAL.
4	BOTTOM OF EXHAUST DUCT SHALL BE 1'-0" A.F.F. PROVIDE 1/2"x 1/2" HARDWARE MESH SCREEN AT INTAKE OF EXHAUST DUCT AND BALANCING DAMPER. BALANCE EXHAUST AIRFLOW TO 2250 CFM.
5	TOP OF EXHAUST DUCT SHALL BE 1'-0" BELOW ROOF. PROVIDE 1/2"x 1/2" HARDWARE MESH SCREEN AT INTAKE OF EXHAUST DUCT AND BALANCING DAMPER. BALANCE EXHAUST AIRFLOW TO 2250 CFM.

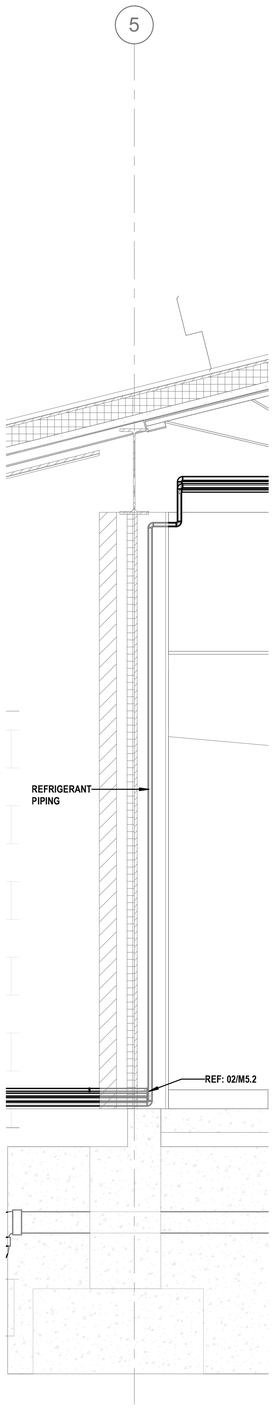

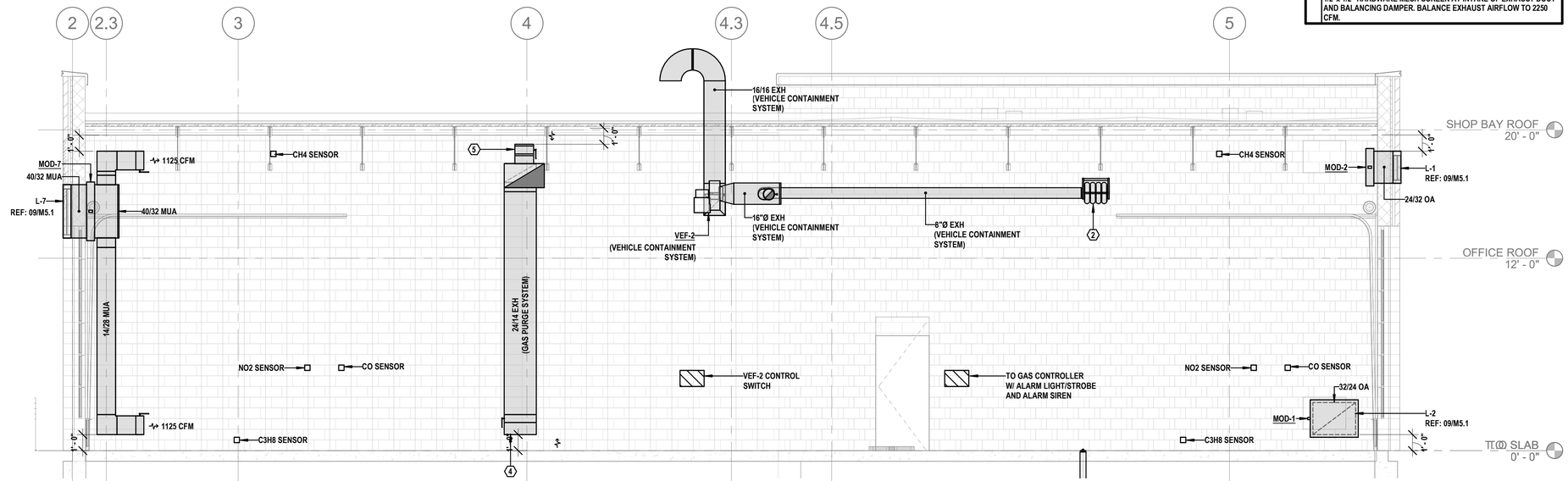

02 SECTION AT VEHICLE EXHAUST SYSTEM
SCALE: 1/4" = 1'-0"

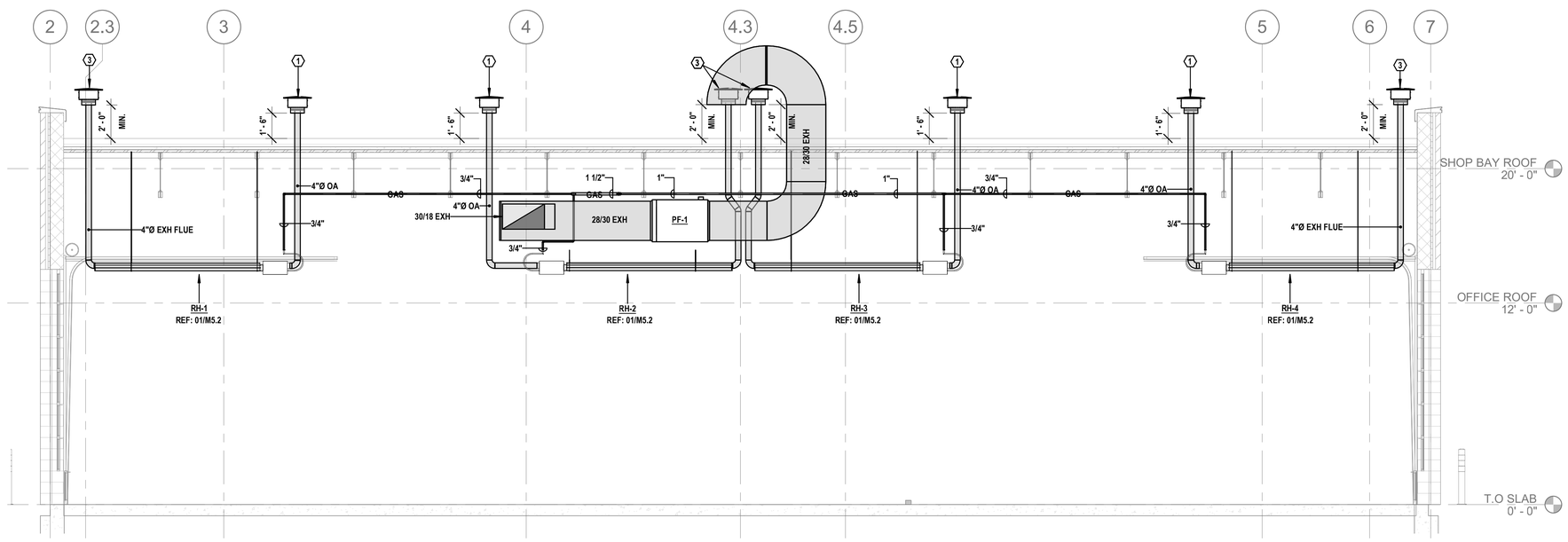

03 SECTION AT REFRIGERANT PIPE ENTRY
SCALE: 3/4" = 1'-0"

01 SECTION AT RADIANT HEATERS AND CEILING FANS
SCALE: 1/4" = 1'-0"

Texas Department of Transportation
COPYRIGHT © 2021

DFW Consulting Group, Inc.
1616 Corporate Court, Suite 100
Irving, Tx 75038
(972) 929-1199
www.dfwcgi.com
Project No. :20014
Firm Registration No. :720
KENNETH DAVID MELINE
61722
REGISTERED PROFESSIONAL ENGINEER
04/21/2021

DALLAS DISTRICT (18)
COLLIN COUNTY
McKinney Area Engineering and Maintenance Facility
2205 TX-5, McKinney, TX 75069
PROJECT NO. 18-470420012

ISSUED: 2021.04.21
DRAWN BY: DFWCGI
REVISIONS:

MECHANICAL SECTIONS

M2.7

THIS DRAWING CREATED FOR PRODUCTION ON 22"x34" SHEET SIZE. DO NOT SCALE PRINTS.

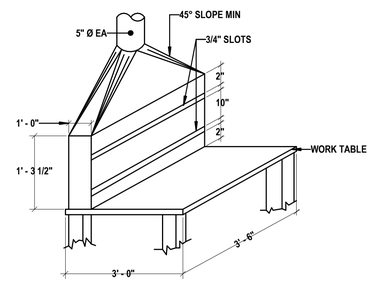

NOTE:
GALVANIZED SHEET METAL TO MEET DUST EXHAUST CONSTRUCTION REQUIREMENTS SPECIFIED IN SECTION 233113

06 WORK TABLE HOOD DETAIL
SCALE: NONE

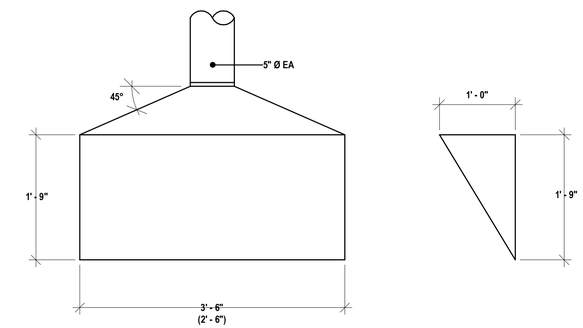

NOTE:
GALVANIZED SHEET METAL TO MEET DUST EXHAUST CONSTRUCTION REQUIREMENTS SPECIFIED IN SECTION 233113.

05 COMPACTOR (CHIPMUNK) HOOD DETAIL
SCALE: NONE

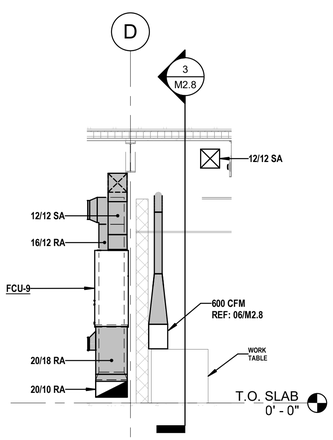

04 TABLE DUCT
SCALE: 1/4" = 1'-0"

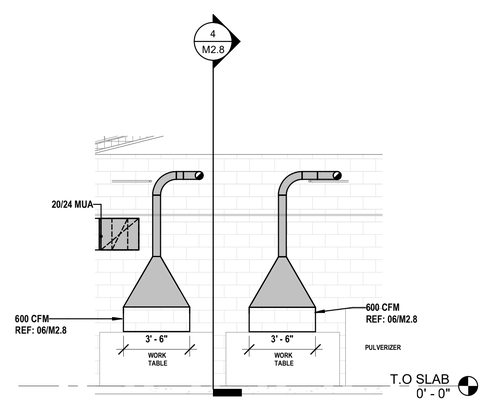

03 TABLE DUST HOODS
SCALE: 1/4" = 1'-0"

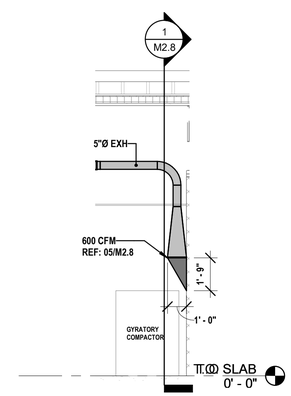

02 DUST HOOD SIDE VIEW
SCALE: 1/4" = 1'-0"

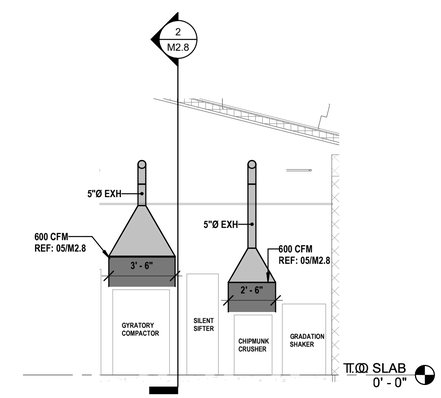

01 DUST COLLECTION HOODS
SCALE: 1/4" = 1'-0"

Texas Department of Transportation

COPYRIGHT © 2021

DFW Consulting Group, Inc.
1616 Corporate Court, Suite 100
Irving, Tx 75038
(972) 929-1199
www.dfwcgi.com
Project No. :20014
Firm Registration No. :720

STATE OF TEXAS
KENNETH DAVID MELINE
61722
REGISTERED PROFESSIONAL ENGINEER
04/21/2021

DALLAS DISTRICT (18)
COLLIN COUNTY
McKinney Area Engineering and Maintenance Facility
2205 TX-5, McKinney, TX 75069
PROJECT NO. 18-470420012

ISSUED: 2021.04.21
DRAWN BY: DFWCGI
REVISIONS:

MECHANICAL SECTIONS
M2.8

THIS DRAWING CREATED FOR PRODUCTION ON 22"x34" SHEET SIZE. DO NOT SCALE PRINTS.

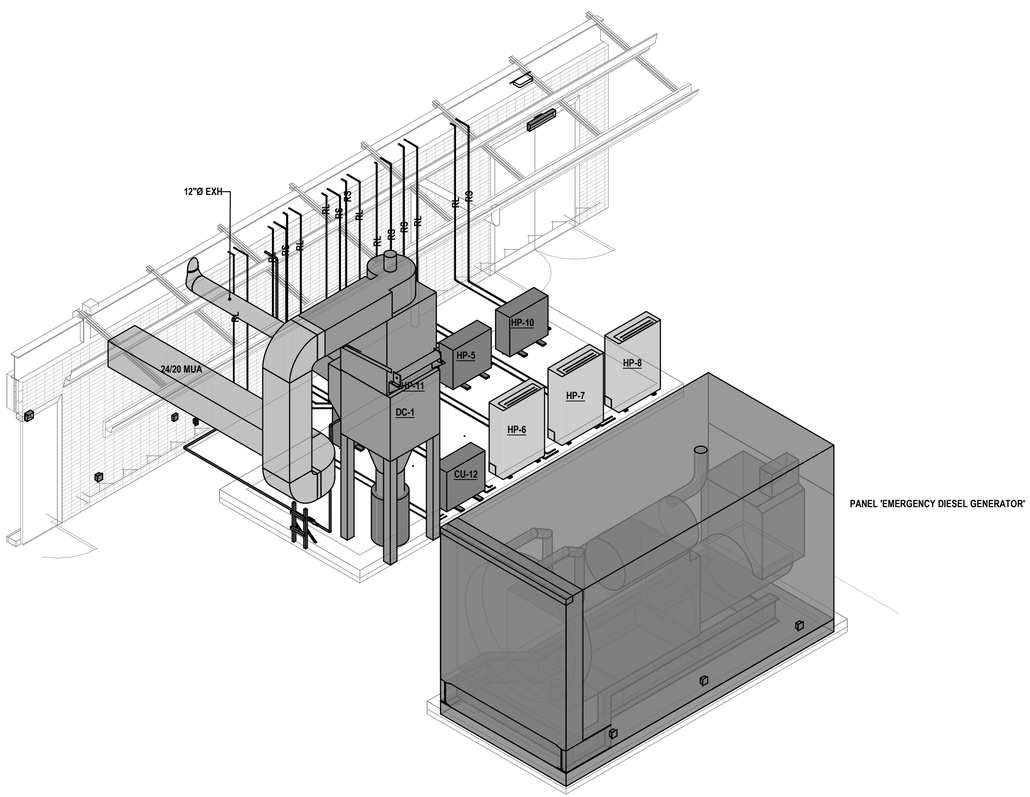

02 MECHANICAL YARD - AREA B
SCALE:

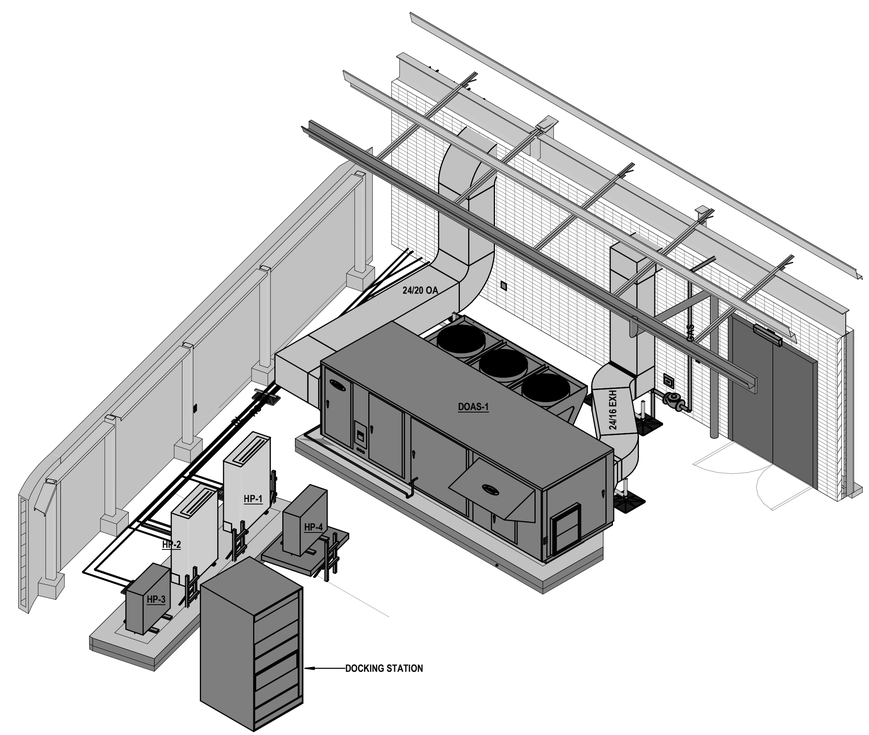

01 MECHANICAL YARD - AREA A
SCALE:

Texas Department of Transportation

COPYRIGHT © 2021

DFW Consulting Group, Inc.
1616 Corporate Court, Suite 100
Irving, Tx 75038
(972) 929-1199
www.dfwcgi.com
Project No. :2004
Firm Registration No. :720

STATE OF TEXAS
KENNETH DAVID SAELINE
61722
REGISTERED
PROFESSIONAL ENGINEER
04/21/2021

DALLAS DISTRICT (18)
COLLIN COUNTY
McKinney Area Engineering and Maintenance Facility
2205 TX-5, McKinney, TX 75069
PROJECT NO. 18-470420012

ISSUED: 2021.04.21
DRAWN BY: DFWCGI
REVISIONS:

MECHANICAL ISOMETRIC VIEWS

M2.9

THIS DRAWING CREATED FOR PRODUCTION ON 22"x34" SHEET SIZE. DO NOT SCALE PRINTS.

TOP VIEW

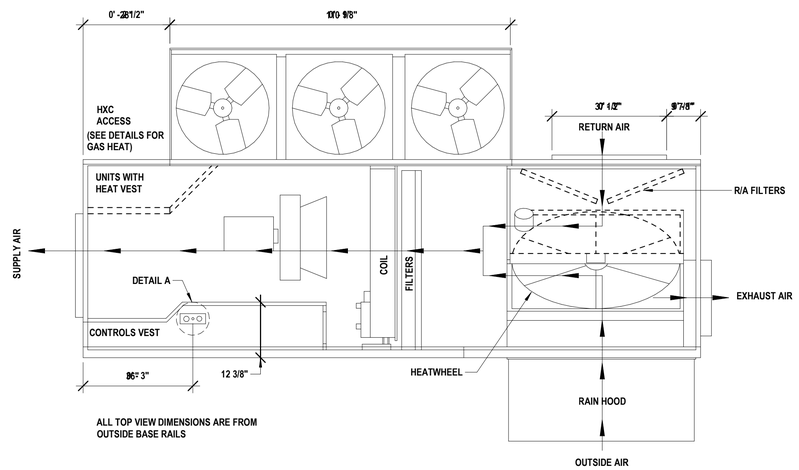

ALL TOP VIEW DIMENSIONS ARE FROM OUTSIDE BASE RAILS

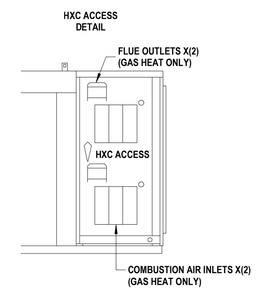

FRONT VIEW

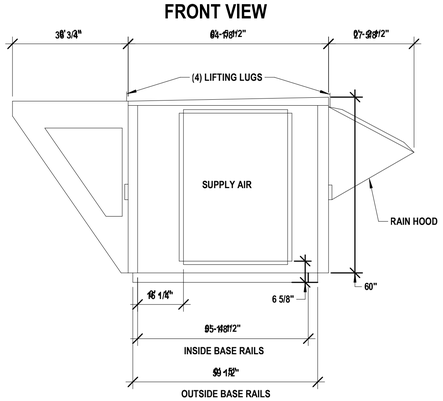

RIGHT SIDE VIEW

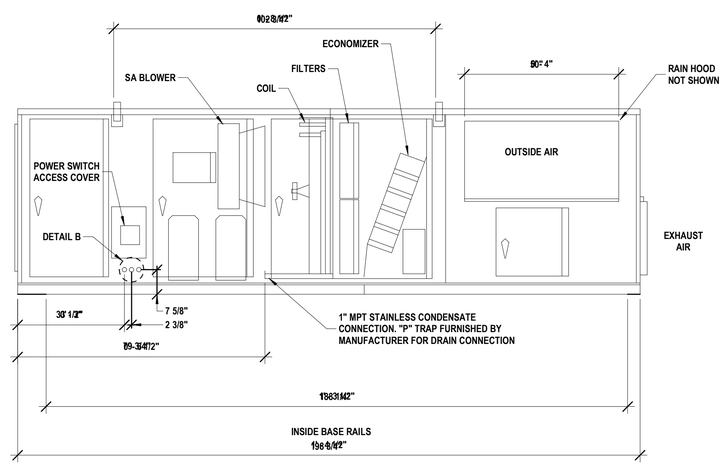

BACK VIEW

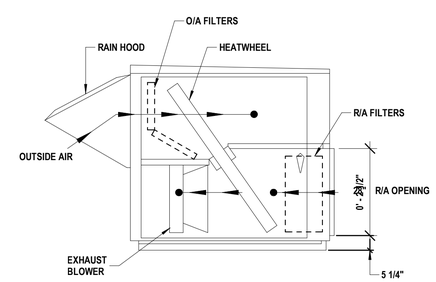

01 DOAS DETAIL

SCALE: NONE

Texas Department of Transportation
COPYRIGHT © 2021

DFW Consulting Group, Inc.
1616 Corporate Court, Suite 100
Irving, Tx 75038
(972) 929-1199
www.dfwcgi.com
Project No. :20014
Firm Registration No. :720

STATE OF TEXAS
KENNETH DAVID MELINE
61722
REGISTERED PROFESSIONAL ENGINEER
04/21/2021

DALLAS DISTRICT (18)
COLLIN COUNTY
McKinney Area Engineering and Maintenance Facility
2205 TX-5, McKinney, TX 75069
PROJECT NO. 18-470420012

ISSUED: 2021.04.21
DRAWN BY: DFWCGI
REVISIONS:

MECHANICAL
DOAS
SECTIONS

M2.10

THIS DRAWING CREATED FOR PRODUCTION ON 22"x34" SHEET SIZE. DO NOT SCALE PRINTS.

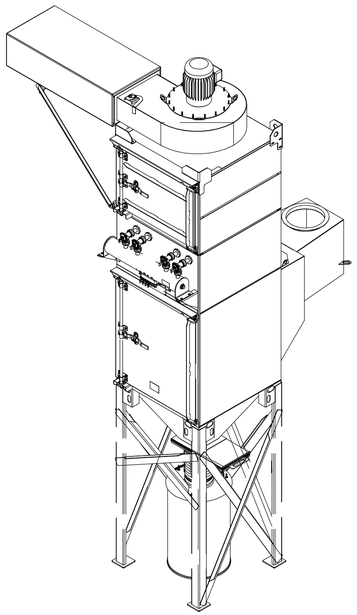

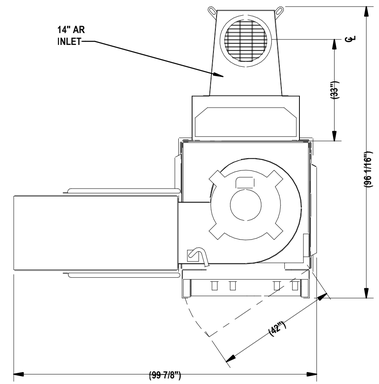

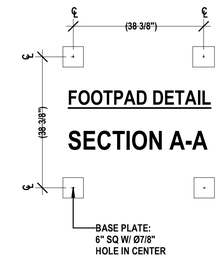

FOOTPAD DETAIL

SECTION A-A

SPECIFICATIONS:

1. MODULAR CONSTRUCTION FROM 10 Ga & 7 Ga HRCS
2. INTEGRATED CONTROLS REQUIRE
3. SOLENOIDS REQUIRE 120/1/60 VAC.
4. SOLENOID ENCLOSURE NEMA 4 RATED, INTEGRATED TIMER CONTROL ENCLOSURE NEMA 12 RATED, OTHER ELECTRICAL DEVICE ENCLOSURES & FARR DUST COLLECTOR TIMER ENCLOSURE NEMA 4X RATED.
   NEMA 4-INDOOR/OUTDOOR USE
   NEMA 4X-INDOOR/OUTDOORS+CORROSION PROTECTION
   NEMA 12-INDOOR USE, NO WATER PROTECTION (DUST TIGHT ONLY)
5. IMPORTANT NOTE:
   FANS TYPICALLY EXPERIENCE FOUR TO TEN TIMES THE FULL LOAD AMPS DURING START-UP. CIRCUITS AND FUSES MUST BE ADJUSTED ACCORDINGLY.
6. CLEANING SYSTEM REQUIRES 15 SCFM OF CLEAN DRY COMPRESSED AIR WITH FACTORY SETTINGS AT 90 PSI.
7. OPERATING VESSEL PRESSURE:
   WITH X-VENT: -3 TO 1 PSIG
   W/OUT X-VENT: -3 TO 1 PSIG
8. EXPLOSION VESSEL STRENGTH: 9.75 PSIG
9. WEIGHTS (COLLECTOR & FILTERS): 2150 LBS
   (HOPPER &SUPPORT): 500 LBS
   (FAN & SILENCER): 700 LBS
   (AR INLET): 150 LBS
   TOTAL WEIGHT: 3500 LBS

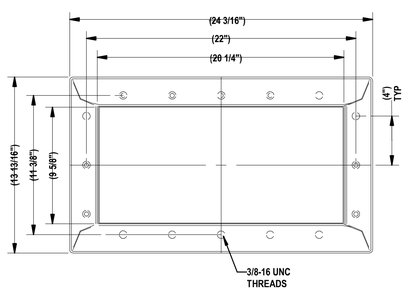

SECTION B-B
SCALE 1:8

1" NPT COMPRESSED AIR REGULATOR W/ GAUGE LOCATION TO BE DETERMINED IN THE FIELD.

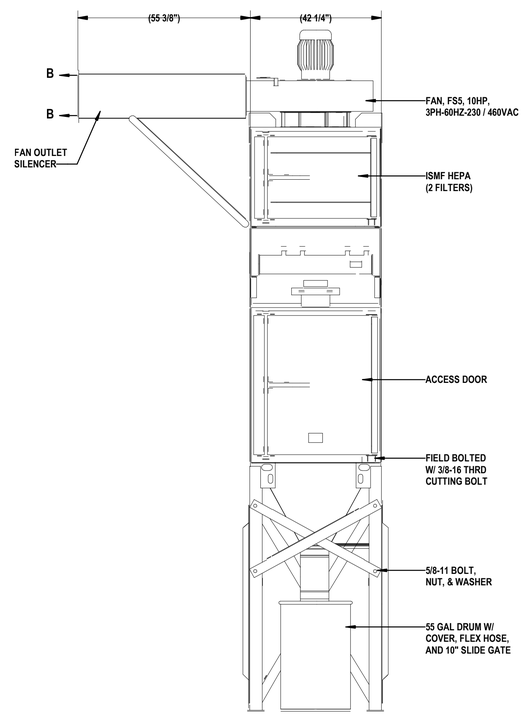

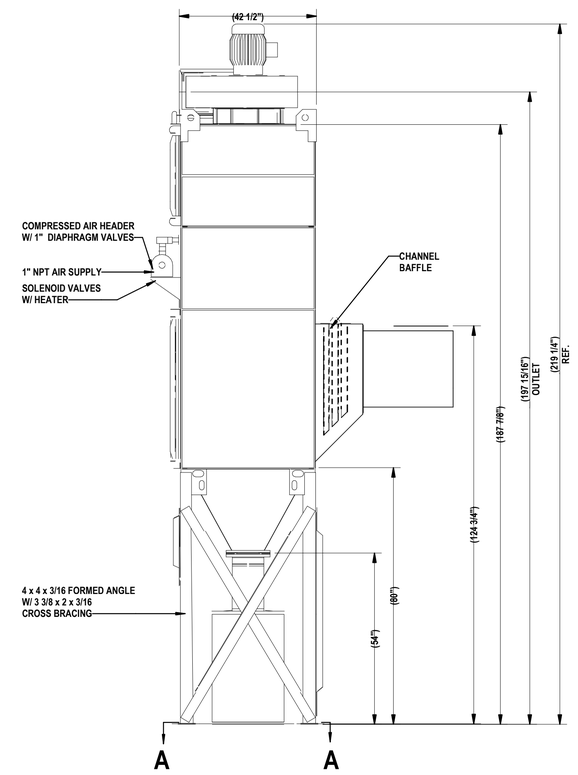

TOUCHSCREEN ☐
NON-TOUCHSCREEN ☒

MODEL: GSX4
APPLICATION DATA:
CFM: 3,800 @ 9.0" W.G.
AIR-TO-CLOTH RATIO: 2.53: 1
DUST LOADING:
APPLICATION:
PRED:
KST:
PMAX:

01 DUST COLLECTOR DETAIL
SCALE: NONE

Texas Department of Transportation

COPYRIGHT © 2021

DFW Consulting Group, Inc.
1616 Corporate Court, Suite 100
Irving, Tx 75038
(972) 929-1199
www.dfwcgi.com
Project No. :2004
Firm Registration No. :720

STATE OF TEXAS
KENNETH DAVID MELINE
61722
REGISTERED PROFESSIONAL ENGINEER
04/21/2021

DALLAS DISTRICT (18)
COLLIN COUNTY
McKinney Area Engineering and Maintenance Facility
2205 TX-5, McKinney, TX 75069
PROJECT NO. 18-47042001 2

ISSUED: 2021.04.21
DRAWN BY: DFWCGI
REVISIONS:

MECHANICAL DUST COLLECTOR SECTIONS

M2.11

THIS DRAWING CREATED FOR PRODUCTION ON 22"x34" SHEET SIZE DO NOT SCALE PRINTS.

BUILDING

MINIMUM EXFILTRATION SUMMARY		
SINGLE DOOR EXFILTRATION:		(7) 350 CFM
DOUBLE DOOR EXFILTRATION:		(3) 300 CFM
MINIMUM EXFILTRATION	=	-650 CFM

AIRFLOW BALANCE SUMMARY		
DOAS OUTDOOR AIR:		3,000 CFM
DOAS EXHAUST AIR:		-2,200 CFM
MDF EXHAUST FAN:		-150 CFM
NET AIRFLOW	=	650 CFM

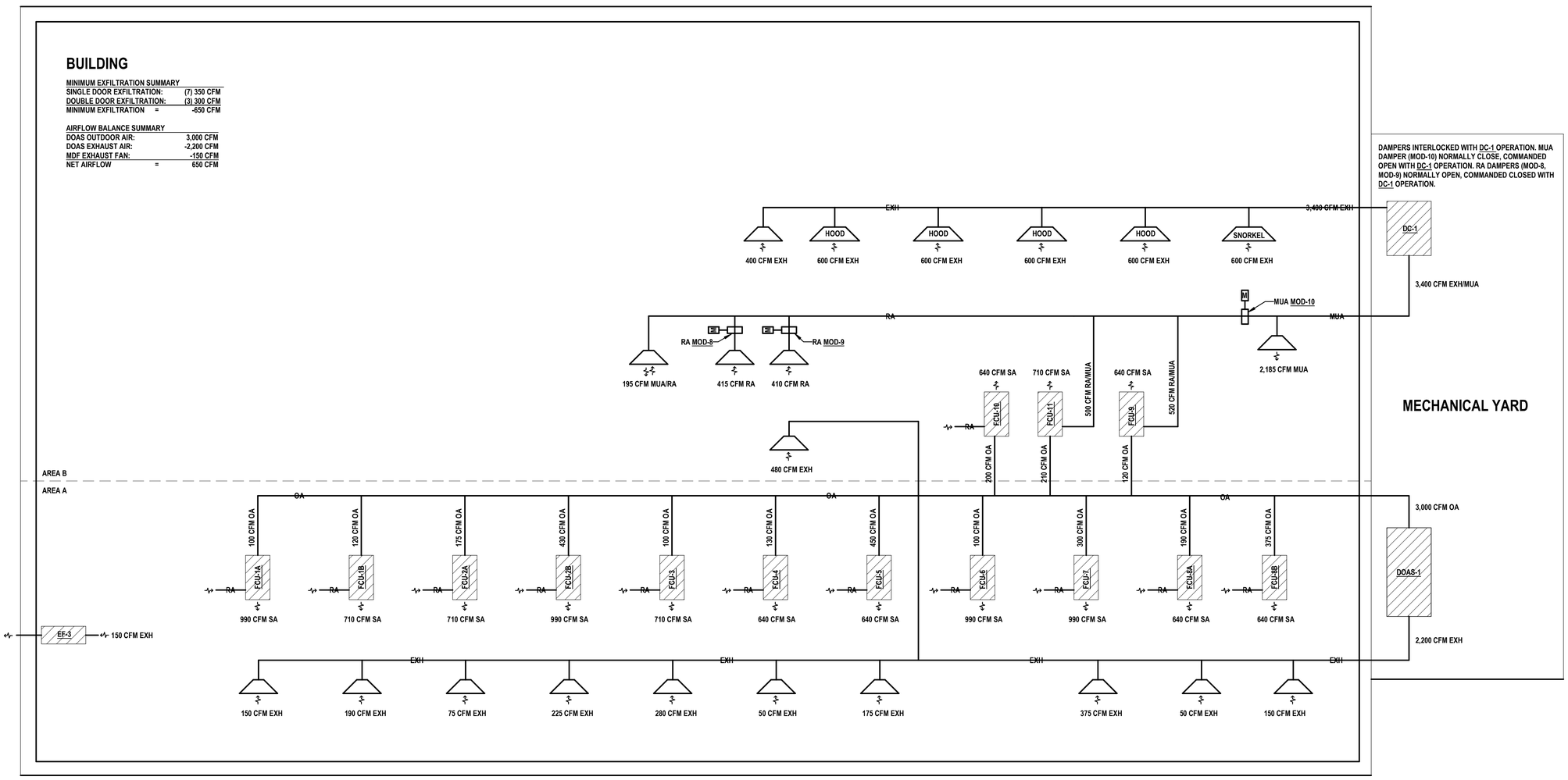

01 AIRFLOW DIAGRAM

SCALE: NONE

Texas Department of Transportation
COPYRIGHT © 2021

DFW Consulting Group, Inc.
1616 Corporate Court, Suite 100
Irving, Tx 75038
(972) 929-1199
www.dfwcgi.com
Project No. :20014
Firm Registration No. :720

STATE OF TEXAS
KENNETH DAVID MELINE
61722
REGISTERED PROFESSIONAL ENGINEER
04/21/2021

DALLAS DISTRICT (18)
COLLIN COUNTY
McKinney Area Engineering and Maintenance Facility
2205 TX-5, McKinney, TX 75069
PROJECT NO. 18-470420012

ISSUED: 2021.04.21
DRAWN BY: DFWCGI
REVISIONS:

MECHANICAL AIRFLOW DIAGRAM

M3.1

THIS DRAWING CREATED FOR PRODUCTION ON 22"x34" SHEET SIZE. DO NOT SCALE PRINTS.

DEDICATED OUTSIDE AIR UNIT SCHEDULE

MARK	LOCAT.	TYPE	NOM. CAPACITY (TONS)	EER	OA CFM	SUPPLY FAN				POWERED EXHAUST FAN				EQUIVALENT TOTAL CAPACITY (MBH)	COOLING COIL						HEATING COIL						HOT GAS RE-HEAT						ENERGY RECOVERY WHEEL PERFORMANCE												ELECTRICAL			MFG	MODEL	REMARKS
																	EAT (° F)		LAT (° F)										EAT (°F)		LAT (°F)		OA CFM	EXH CFM	SUMMER				WINTER											
																																			OUTSIDE AIR STREAM		EXHAUST AIR STREAM		OUTSIDE AIR STREAM		EXHAUST AIR STREAM								
																																			EAT (° F)		EAT (° F)		EAT (° F)		EAT (° F)								
						CFM	ESP (IN. WG)	BHP	HP	CFM	ESP (IN. WG)	BHP	HP		CFM	TOTAL CAPACITY (MBH)	SENS. CAPACITY (MBH)	DB	WB	DB	WB	WINTER AMBIENT TEMP (°F)	CFM	TMBH	KW	EAT (°F)	LAT (°F)	STAGES	CFM	TMBH	DB	WB	DB	WB			DB	WB	DB	WB	DB	WB	DB	WB	MCA (A)	MOCP (A)	VOLTS/PH			
DOAS-1	MECH YARD	CV	11	23.2	3000	3000	1.30	1.76	3	2350	0.75	0.77	1	241.1	3000	132.1	75.6	78.0	68.5	54.3	53.9	21	3000	51.2	15	51.8	67.6	SCR	3000	67	54.28	53.89	75	61.8	3000	2350	84.4	77.7	78.0	68.5	75.0	62.0	21	21	51.8	49.7	68.0	62.0	72	80	208/3	AAON	RNA-011	1, 2, 3, 4, 5, 6, 7

NOTES:
1. PROVIDE WITH HAIL GUARDS.
2. PROVIDE WITH MERV 13 FILTERS.
3. PROVIDE WITH MODULATING COMPRESSOR TECHNOLOGY.
4. PROVIDE WITH MODULATING ELECTRIC HEATING.
5. PROVIDE WITH MODULATING HOT GAS REHEAT.
6. EQUIVALENT TOTAL CAPACITY IS THE TOTAL COOLING COIL CAPACITY PLUS THE ENERGY RECOVERY WHEEL TOTAL RECOVERED CAPACITY.
7. PROVIDE DUCT SMOKE DETECTOR ON SUPPLY & RETURN DUCT.

DUCTED DX FAN COIL UNIT SCHEDULE

MARK	SERVED BY	LOCATION	TYPE	REFRIGERANT	DUCTED OA CFM	SUPPLY FAN			DX COOLING							DX HEATING				ELECTRICAL			MFG	MODEL	REMARKS
						CFM	ESP (IN. WG)	HP	CFM	TMBH	SMBH	EAT DB (°F)	EAT WB (°F)	LAT DB (°F)	LAT WB (°F)	CFM	MBH	EAT DB (°F)	LAT (°F)	MCA	VOLTS/PH	MOCP			
FCU-1A	HP-1	109 MECH CLOSET	VERTICAL DUCTED	R-410A	100	990	0.7	0.3	990	32.1	28.2	73	61	46.7	46.7	990	30.0	70	97.9	39.6	208/1	55	LG	LVN361HV4	2, 3, 4, 5, 6
FCU-1B	HP-1	109 MECH CLOSET	VERTICAL DUCTED	R-410A	120	710	0.7	0.3	710	21.4	18.6	73	61	48.9	48.9	710	20.3	70	96.4	25.1	208/1	35	LG	LVN241HV4	1, 3, 4, 5, 6
FCU-2A	HP-2	109 MECH CLOSET	VERTICAL DUCTED	R-410A	175	710	0.7	0.3	710	21.4	18.6	73	61	48.9	48.9	710	20.3	70	96.4	25.1	208/1	35	LG	LVN241HV4	1, 3, 4, 5, 6
FCU-2B	HP-2	109 MECH CLOSET	VERTICAL DUCTED	R-410A	430	990	0.7	0.3	990	32.1	28.2	73	61	46.7	46.7	990	30.0	70	97.9	39.6	208/1	55	LG	LVN361HV4	2, 3, 4, 5, 6
FCU-3	HP-3	109 MECH CLOSET	VERTICAL DUCTED	R-410A	100	710	0.7	0.3	710	21.4	18.6	73	61	48.9	48.9	710	19.8	70	95.7	25.1	208/1	35	LG	LV241HV4	1, 3, 4, 5, 6
FCU-4	HP-4	109 MECH CLOSET	VERTICAL DUCTED	R-410A	130	640	0.7	0.3	640	16.1	13.7	73	61	53.3	52.1	640	13.7	70	89.7	25.1	208/1	35	LG	LV181HV4	1, 3, 4, 5, 6
FCU-5	HP-5	153 MECH CLOSET	VERTICAL DUCTED	R-410A	450	640	0.7	0.3	640	16.1	13.7	73	61	53.3	52.1	640	13.7	70	89.7	25.1	208/1	35	LG	LV181HV4	1, 3, 4, 5, 6
FCU-6	HP-6	153 MECH CLOSET	VERTICAL DUCTED	R-410A	100	990	0.7	0.3	990	32.1	28.2	73	61	46.7	46.7	990	25.6	70	93.8	39.6	208/1	55	LG	LV361HV4	2, 3, 4, 5, 6
FCU-7	HP-7	153 MECH CLOSET	VERTICAL DUCTED	R-410A	300	990	0.7	0.3	990	32.1	28.2	73	61	46.7	46.7	990	25.6	70	93.8	39.6	208/1	55	LG	LV361HV4	2, 3, 4, 5, 6
FCU-8A	HP-8	153 MECH CLOSET	VERTICAL DUCTED	R-410A	190	640	0.7	0.3	640	16.1	13.7	73	61	53.3	52.1	640	15.0	70	91.6	25.1	208/1	35	LG	LVN181HV4	1, 3, 4, 5, 6
FCU-8B	HP-8	153 MECH CLOSET	VERTICAL DUCTED	R-410A	375	710	0.7	0.3	710	21.4	18.6	73	61	48.9	48.9	710	20.3	70	96.4	25.1	208/1	35	LG	LVN241HV4	1, 3, 4, 5, 6
FCU-9	HP-9	136 MECH CLOSET	VERTICAL DUCTED	R-410A	120	640	0.7	0.3	640	16.1	13.7	73	61	53.3	52.1	640	13.7	70	89.7	25.1	208/1	35	LG	LV181HV4	1, 3, 4, 5, 6
FCU-10	HP-10	MECH CLOSET	VERTICAL DUCTED	R-410A	200	990	0.7	0.3	990	32.1	28.2	73	61	46.7	46.7	990	25.6	70	93.8	39.6	208/1	55	LG	LV361HV4	2, 3, 4, 5, 6
FCU-11	HP-11	136 MECH CLOSET	VERTICAL DUCTED	R-410A	210	710	0.7	0.3	710	21.4	18.6	73	61	48.9	48.9	710	19.8	70	95.7	25.1	208/1	35	LG	LV241HV4	1, 3, 4, 5, 6

NOTES:
1. PROVIDE WITH 5kW BACKUP ELECTRIC HEATER, EQUAL TO ANEH053B1.
2. PROVIDE WITH 8kW BACKUP ELECTRIC HEATER, EQUAL TO ANEH083B2.
3. PROVIDE WITH MERV 13 FILTER.
4. PROVIDE REFRIGERANT PIPING PER MANUFACTURER'S RECOMMENDATIONS.
5. UNIT SHALL BE SUPPORTED PER MANUFACTURER'S RECOMMENDATIONS.
6. PROVIDE DUCT SMOKE DETECTOR FOR ALL UNITS.

AIR DEVICE SCHEDULE

IMAGE	MARK	DUTY	TYPE	NECK SIZE	FACE SIZE	CFM	SP (IN. WG.)	MAX. NC	MFG	MODEL	REMARKS
	A	SUPPLY	CEILING	AS NOTED	24"x24"	AS NOTED	0.10	30	TITUS	TDC-AA	1, 2, 3, 4
	B	RETURN/ TRANSFER	CEILING	AS NOTED	24"x24"	AS NOTED	0.10	30	TITUS	50F-NT	1, 2, 3, 4, 5
	C	SUPPLY	SIDEWALL	AS NOTED	AS NOTED	AS NOTED	0.10	30	TITUS		1, 2, 3
	D	RETURN	SIDEWALL	AS NOTED	AS NOTED	AS NOTED	0.10	30	TITUS	350FS	1, 2, 3
	E	EXHAUST	CEILING	AS NOTED	24"x24"	AS NOTED	0.10	30	TITUS	50F-NT	1, 2, 3, 4, 5
	F	EXHAUST	CEILING	AS NOTED	12"x12"	AS NOTED	0.10	30	TITUS	50F-NT	1, 2, 3, 4, 5
	G	EXHAUST	SIDEWALL	AS NOTED	AS NOTED	AS NOTED	0.10	30	TITUS	350FS	1, 2, 3
	H	EXHAUST	SNORKEL	AS NOTED	SNORKEL	AS NOTED	0.10	30	FUME DOG	EXTRATION ARM	3

NOTES:
1. PROVIDE ALUMINUM CONSTRUCTION WITH BAKED COATING AS SPECIFIED BY THE ARCHITECT.
2. PROVIDE WITH INTEGRAL OPPOSED BLADE DAMPER WHERE MANUAL DAMPER IS INACCESSIBLE .
3. COORDINATE FINAL COLOR AND FINISH WITH ARCHITECT.
4. PROVIDE PLASTER FRAME FOR DIFFUSERS, OR GRILLE, IN GYPBOARD CEILINGS.
5. PROVIDE ROUND DUCT ADAPTER.

HEAT PUMP SCHEDULE

MARK	LOCATION	NOM. CAPACITY (TONS)	AMBIENT TEMP (°F)	COOLING CAPACITY (MBH)	HEATING CAPACITY (MBH)	REFRIGERANT	MCA	VOLTS/PH	MOCP	MFG	MODEL	REMARKS
HP-1	MECHANICAL YARD	5	100	51.8	45.0	R-410A	32.2	208/1	45	LG	LMU600HV	1, 2
HP-2	MECHANICAL YARD	5	100	51.8	45.0	R-410A	32.2	208/1	45	LG	LMU600HV	1, 2
HP-3	MECHANICAL YARD	2	100	21.4	19.8	R-410A	20.0	208/1	30	LG	LUU249HV	1, 2
HP-4	MECHANICAL YARD	1.5	100	16.1	13.7	R-410A	20.0	208/1	30	LG	LUU189HV	1, 2
HP-5	MECHANICAL YARD	1.5	100	16.1	13.7	R-410A	20.0	208/1	30	LG	LUU189HV	1, 2
HP-6	MECHANICAL YARD	3	100	32.1	25.6	R-410A	32.0	208/1	40	LG	LUU369HV	1, 2
HP-7	MECHANICAL YARD	3	100	32.1	25.6	R-410A	32.0	208/1	40	LG	LUU369HV	1, 2
HP-8	MECHANICAL YARD	4	100	39.3	34.5	R-410A	27.3	208/1	40	LG	LMU480HV	1, 2
HP-9	MECHANICAL YARD	1.5	100	16.1	13.7	R-410A	20.0	208/1	30	LG	LUU189HV	1, 2
HP-10	MECHANICAL YARD	3	100	32.1	25.6	R-410A	32.0	208/1	40	LG	LUU369HV	1, 2
HP-11	MECHANICAL YARD	2	100	21.4	19.8	R-410A	20.0	208/1	30	LG	LUU249HV	1, 2

NOTES:
1. PROVIDE REFRIGERANT PIPING PER MANUFACTURER'S RECOMMENDATIONS.
2. PROVIDE UNIT WITH RRS ROOFTOP SYSTEMS HAIL GUARD, OR APPROVED EQUAL.

CONDENSING UNIT SCHEDULE (COOLING ONLY)

MARK	SERVES	NOMINAL TONS	AMBIENT TEMP. (° F)	REFRIGERANT	COOLING CAPACITY (MBH)	ELECTRICAL			MFG	MODEL	REMARKS
						MCA	MOCP	VOLTS/PH			
CU-12	FCU-12	0.75	100	R-410A	7.9	10	15	208/1	LG	LSU090HSV5	1, 2

NOTES:
1. PROVIDE REFRIGERANT PIPING PER MANUFACTURER'S RECOMMENDATIONS.
2. PROVIDE UNIT WITH RRS ROOFTOP SYSTEMS HAIL GUARD, OR APPROVED EQUAL.

DUCTLESS DX FAN COIL UNIT SCHEDULE (COOLING ONLY)

MARK	SERVED BY	TYPE	SUPPLY FAN CFM	SENSIBLE CAP (MBH)	MFG	MODEL	REMARKS
FCU-12	CU-12	WALL MOUNTED	317	7.9	LG	LSN090HSV5	1, 2

NOTES:
1. PROVIDE CONDENSATE PUMP AND GUARD EQUAL TO LITTLE GIANT EC-1K.
2. INDOOR UNIT IS POWERED FROM OUTDOOR CONDENSING UNIT.

Texas Department of Transportation

COPYRIGHT © 2021

DFW Consulting Group, Inc.
1616 Corporate Court, Suite 100
Irving, Tx 75038
(972) 929-1199
www.dfwcgi.com
Project No. :20014
Firm Registration No. :720

KENNETH DAVID MELINE 61722 REGISTERED PROFESSIONAL ENGINEER 04/21/2021

DALLAS DISTRICT (18)
COLLIN COUNTY
McKinney Area Engineering and Maintenance Facility
2205 TX-5, McKinney, TX 75069
PROJECT NO. 18-470420012

ISSUED: 2021.04.21
DRAWN BY: DFWCGI
REVISIONS:

MECHANICAL SCHEDULES

M4.1

THIS DRAWING CREATED FOR PRODUCTION ON 22"x34" SHEET SIZE. DO NOT SCALE PRINTS.

RADIANT HEATER SCHEDULE (NATURAL GAS FIRED)

MARK	LOCATION	LENGHT	MBH	GAS PRESSURE RANGE (MIN / MAX) IN. W.G.	VOLTS/PH	MFG	MODEL	REMARKS
RH-1	128 VEHICLE SHOP BAYS	11.5	40.0	4.6" / 14.0"	120/1	ROBERTS GORDON	BH-40	1
RH-2	128 VEHICLE SHOP BAYS	11.5	40.0	4.6" / 14.0"	120/1	ROBERTS GORDON	BH-40	1
RH-3	128 VEHICLE SHOP BAYS	11.5	40.0	4.6" / 14.0"	120/1	ROBERTS GORDON	BH-40	1
RH-4	128 VEHICLE SHOP BAYS	11.5	40.0	4.6" / 14.0"	120/1	ROBERTS GORDON	BH-40	1

NOTES:
1. NATURAL GAS OPERATING RANGE FROM 4.6" OF WC TO 14.0" OF WC

ELECTRIC UNIT HEATER SCHEDULE

MARK	LOCATION	KW	VOLTS/PH	MFG	MODEL	REMARKS
EUH-1	130 HERBICIDE STORAGE	3	208/1	QMARK	GUX300812	1, 2
EUH-2	129 EQUIPMENT ROOM	5	208/1	QMARK	GUX500812	1, 2

NOTES:
1. PROVIDE FACTORY MOUNTED DISCONNECT.
2. PROVIDE FACTORY MOUNTED THERMOSTAT.

MOTORIZED DAMPER SCHEDULE

MARK	DUTY	BLADE TYPE	CONTROL TYPE	DUCT SIZE (IN)		CFM	MATERIALS		VOLTS (V)	MFG.	MODEL NO.	REMARKS
				WIDTH	HEIGHT		FRAME	BLADE				
MOD-1	MAKE UP	OPPOSED	OPEN/CLOSE	32	24	1125	ALUMINUM	ALUMINUM	24	GREENHECK	VCD-23	1
MOD-2	MAKE UP	OPPOSED	OPEN/CLOSE	32	24	1125	ALUMINUM	ALUMINUM	24	GREENHECK	VCD-23	1
MOD-3	MAKE UP	OPPOSED	OPEN/CLOSE	32	24	1125	ALUMINUM	ALUMINUM	24	GREENHECK	VCD-23	1
MOD-4	MAKE UP	OPPOSED	OPEN/CLOSE	32	24	1125	ALUMINUM	ALUMINUM	24	GREENHECK	VCD-23	1
MOD-5	MAKE UP	OPPOSED	OPEN/CLOSE	32	24	1125	ALUMINUM	ALUMINUM	24	GREENHECK	VCD-23	1
MOD-6	MAKE UP	OPPOSED	OPEN/CLOSE	32	24	1125	ALUMINUM	ALUMINUM	24	GREENHECK	VCD-23	1
MOD-7	MAKE UP	OPPOSED	OPEN/CLOSE	32	40	2250	ALUMINUM	ALUMINUM	24	GREENHECK	VCD-23	1
MOD-8	RETURN AIR	OPPOSED	OPEN/CLOSE	12	12	400	GALVANIZED	GALVANIZED	24	GREENHECK	VCD-23	1
MOD-9	RETURN AIR	OPPOSED	OPEN/CLOSE	12	12	545	GALVANIZED	GALVANIZED	24	GREENHECK	VCD-23	1
MOD-10	MAKE UP	OPPOSED	OPEN/CLOSE	20	10	945	GALVANIZED	GALVANIZED	24	GREENHECK	VCD-23	1

NOTES:
1. PROVIDE 24V FOR CONTROLS.

FAN SCHEDULE

MARK	LOCATION	DUTY	TYPE	DRIVE	CFM	ESP (IN. WG)	FAN RPM	MOTOR			MFG	MODEL	REMARKS
								RPM	HP	VOLTS/PH			
EF-1	130 HERBICIDE STORAGE	EXHAUST	WALL MOUNTED	DIRECT	280	0.12	860	860	0.167	115/1	GREENHECK	AER-E20C-301-C6	1, 2, 4, 5, 6
EF-2	129 EQUIPMENT ROOM	EXHAUST	WALL MOUNTED	DIRECT	100	0.10	458	1100	0.25	115/1	GREENHECK	AER-E20C-610-VG	1, 2, 3, 5, 6
EF-3	116 MDF	EXHAUST	INLINE	DIRECT	150	0.25	1448	1725	0.067	115/1	GREENHECK	SQ-70-VG	1, 3, 9
PF-1	128 VEHICLE SHOP BAYS	EXHAUST	INLINE	DIRECT	9000	0.95	1543	1650	5	208/3	GREENHECK	SQ-20-07-0700-VG	1, 2, 7
TAF-1	100 VESTIBULE	TRANSFER	INLINE	DIRECT	110	0.25	1587	1725	0.067	115/1	GREENHECK	SQ-60-VG	1, 2, 3, 8
TAF-2	106 VESTIBULE	TRANSFER	INLINE	DIRECT	50	0.25	1354	1725	0.067	115/1	GREENHECK	SQ-60-VG	1, 2, 3, 8
VEF-1	128 VEHICLE SHOP BAYS	EXHAUST	INLINE	DIRECT	1800	5.00	3023	3023	3	208/3	CAR-MON	CMB-14	1, 10
VEF-2	128 VEHICLE SHOP BAYS	EXHAUST	INLINE	DIRECT	1800	5.00	3023	3023	3	208/3	CAR-MON	CMB-14	1, 10

NOTES:
1. PROVIDE WITH BACK DRAFT DAMPER.
2. PROVIDE WITH FACTORY MOUNTED INTEGRAL DISCONNECT.
3. PROVIDE WITH ECM MOTOR AND FAN SPEED CONTROLLER.
4. PROVIDE WITH SPARK B CONSTRUCTION.
5. PROVIDE WITH SHORT WALL FAN HOUSING.
6. FAN SHALL BE IN 24/7 CONTINUOUS OPERATION.
7. PROVIDE WITH ECM MOTOR, AND 2-SPEED FAN SPEED CONTROLLER. LOW AIRFLOW IS 7650 CFM, HIGH AIRFLOW IS 9000 CFM.
8. PROVIDE WITH 7-DAY PROGRAMMABLE LINE-VOLTAGE THERMOSTAT.
9. FAN SHALL BE CONTROLLED WITH A TOGGLE SWITCH ON THE WALL.
10. CONTROLLER BY CAR-MON.

LOUVER SCHEDULE

MARK	LOCATION	DUTY	DUCT SIZE (IN.)		FREE AREA (FT2)	CFM	ADP (IN. WG)	FREE AREA VEL. (FPM)	MATERIALS		MODEL	MFG	REMARKS
			WIDTH	HEIGHT					FRAME	BLADE			
L-1	128 VEHICLE SHOP BAYS	MAKE-UP	32.0	24.0	2.51	1125	0.03	453	ALUMINUM	ALUMINUM	ESD-635	GREENHECK	1, 2
L-2	128 VEHICLE SHOP BAYS	MAKE-UP	32.0	24.0	2.51	1125	0.03	453	ALUMINUM	ALUMINUM	ESD-635	GREENHECK	1, 2
L-3	128 VEHICLE SHOP BAYS	MAKE-UP	32.0	24.0	2.51	1125	0.03	453	ALUMINUM	ALUMINUM	ESD-635	GREENHECK	1, 2
L-4	128 VEHICLE SHOP BAYS	MAKE-UP	32.0	24.0	2.51	1125	0.03	453	ALUMINUM	ALUMINUM	ESD-635	GREENHECK	1, 2
L-5	128 VEHICLE SHOP BAYS	MAKE-UP	32.0	24.0	2.51	1125	0.03	453	ALUMINUM	ALUMINUM	ESD-635	GREENHECK	1, 2
L-6	128 VEHICLE SHOP BAYS	MAKE-UP	32.0	24.0	2.51	1125	0.03	453	ALUMINUM	ALUMINUM	ESD-635	GREENHECK	1, 2
L-7	128 VEHICLE SHOP BAYS	MAKE-UP	32.0	40.0	5.00	2250	0.03	450	ALUMINUM	ALUMINUM	ESD-635	GREENHECK	1, 2
L-8	130 HERBICIDE STORAGE	MAKE-UP	32.0	16.0	1.26	280	0.01	226	ALUMINUM	ALUMINUM	ESD-635	GREENHECK	1, 2
L-9	129 EQUIPMENT ROOM	MAKE-UP	24.0	16.0	0.92	450	0.04	499	ALUMINUM	ALUMINUM	ESD-635	GREENHECK	1, 2

NOTES:
1. PROVIDE WITH BIRDSCREEN.
2. COORDINATE FINAL COLOR AND FINISH WITH ARCHITECT.

DUST COLLECTOR SCHEDULE

MARK	WEIGHT (LBS)	FILTER TYPE	AIR FLOW (CFM)	FILTRATION (MICRONS)	AIR INLET (IN)	ELECTRICAL			NOISE LEVEL (DB)	DIMENSIONS			MFG	MODEL	NOTES
						HP	FLA	VOLTS/PH		HEIGHT (IN)	LENGTH (IN)	WIDTH (IN)			
DC-1	3500	STYLE A	3400	0.3	14"	10	24.4	208/3		219 1/4	99 7/8	96 1/16	CAMFIL	GSX4	1

NOTES:
1. CONTROLLER BY DUST COLLECTOR MANUFACTURER.

Texas Department of Transportation

COPYRIGHT © 2021

DFW Consulting Group, Inc.
1616 Corporate Court, Suite 100
Irving, Tx 75038
(972) 929-1199
www.dfwcgi.com
Project No. :20044
Firm Registration No. :720

STATE OF TEXAS
KENNETH DAVID MELINE
61722
REGISTERED PROFESSIONAL ENGINEER
04/21/2021

DALLAS DISTRICT (18)
COLLIN COUNTY
McKinney Area Engineering and Maintenance Facility
2205 TX-5, McKinney, TX 75069
PROJECT NO. 18-470420012

ISSUED: 2021.04.21
DRAWN BY: DFWCGI
REVISIONS:

MECHANICAL SCHEDULES

M4.2

THIS DRAWING CREATED FOR PRODUCTION ON 22"x34" SHEET SIZE. DO NOT SCALE PRINTS.

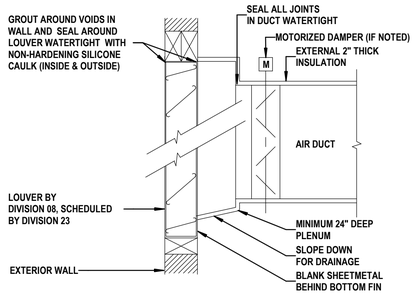

09 LOUVER INSTALLATION DETAIL
SCALE: NONE

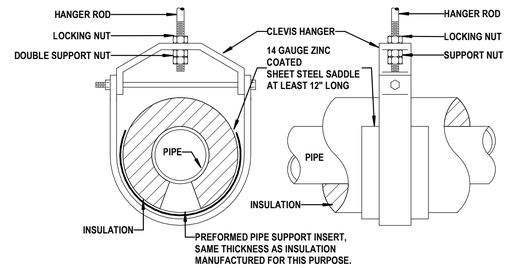

06 PIPE HANGER
SCALE: NONE

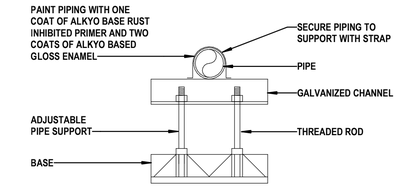

03 PIPE ON GRADE SUPPORT DETAIL
SCALE: NONE

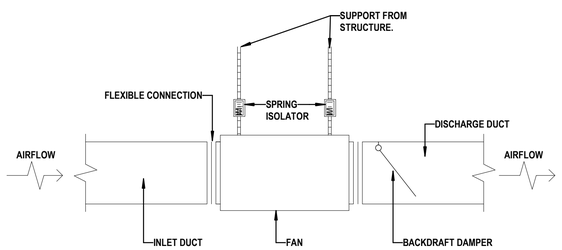

08 INLINE EXHAUST FAN DETAIL
SCALE: NONE

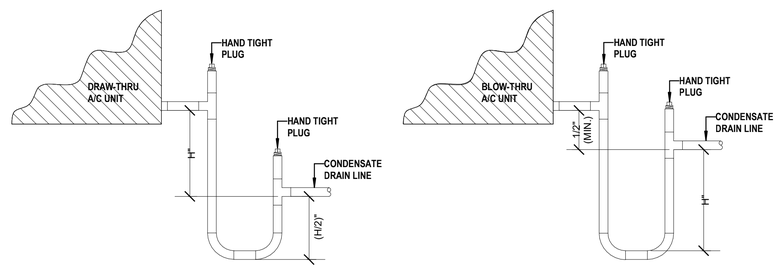

DRAW-THRU UNIT
H=3" (MIN.)

BLOW-THRU UNIT
H= UNIT E.S.P. (IN. W.G.) + 1.0"
H=3" (MIN.)

05 CONDENSATE DRAIN
SCALE: NONE

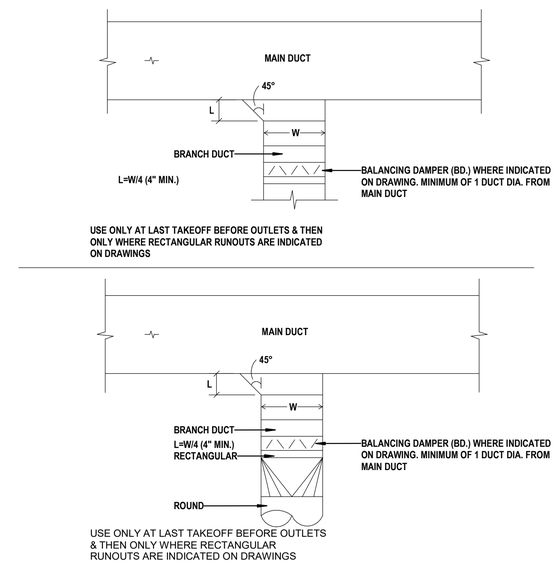

02 BRANCH DUCT CONNECTIONS
SCALE: NONE

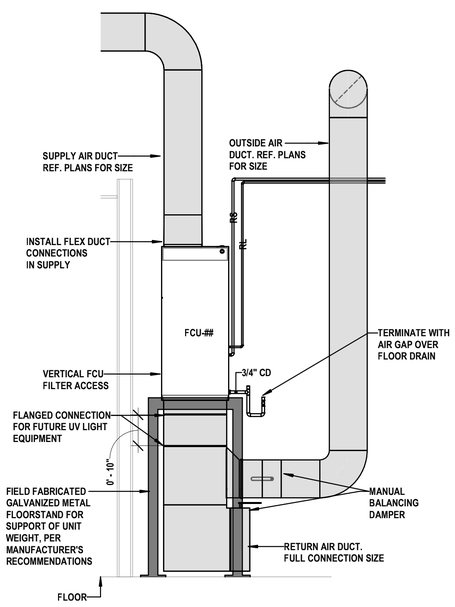

07 TYPICAL VERTICAL FCU DUCT CONNECTION DETAIL
SCALE: NONE

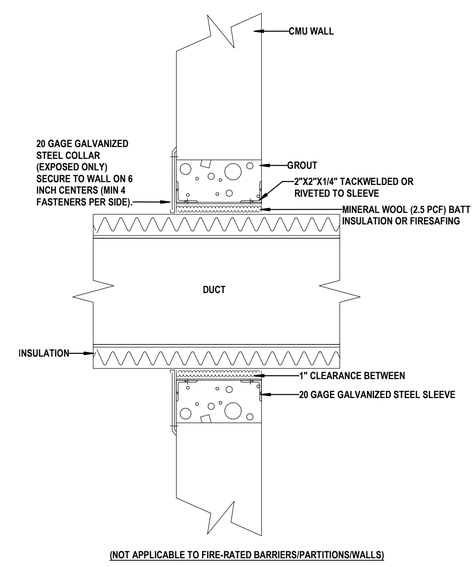

(NOT APPLICABLE TO FIRE-RATED BARRIERS/PARTITIONS/WALLS)

04 DUCTWORK PENETRATION THROUGH WALL
SCALE: NONE

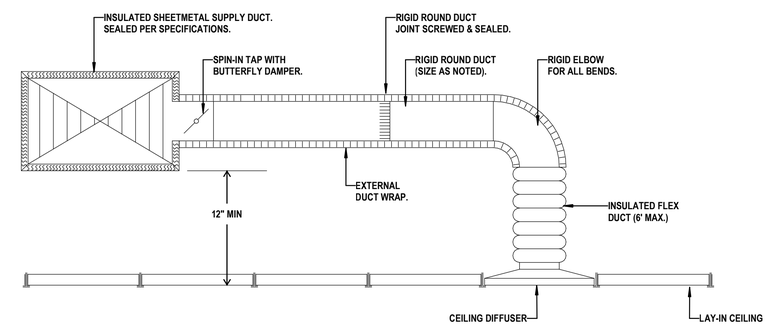

01 TYPICAL DUCT DETAIL
SCALE: NONE

Texas Department of Transportation
COPYRIGHT © 2021

DFW Consulting Group, Inc.
1616 Corporate Court, Suite 100
Irving, Tx 75038
(972) 929-1199
www.dfwcgi.com
Project No. :20014
Firm Registration No. :720
KENNETH DAVID MELINE 61722 REGISTERED PROFESSIONAL ENGINEER
04/21/2021

DALLAS DISTRICT (18)
COLLIN COUNTY
McKinney Area Engineering and Maintenance Facility
2205 TX-5, McKinney, TX 75069
PROJECT NO. 18-470420012

ISSUED: 2021.04.21
DRAWN BY: DFWCGI
REVISIONS:

MECHANICAL DETAILS

M5.1

THIS DRAWING CREATED FOR PRODUCTION ON 22"x34" SHEET SIZE. DO NOT SCALE PRINTS.

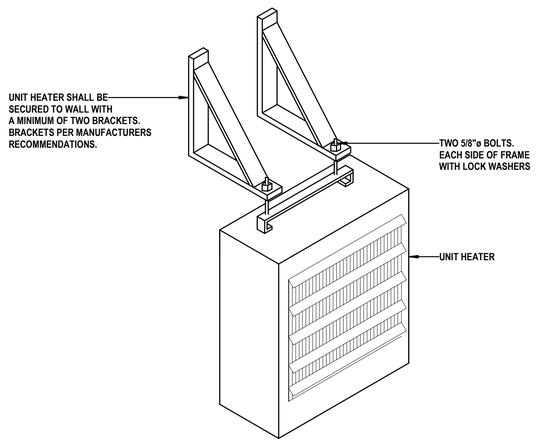

10 ELECTRIC UNIT HEATER DETAIL
SCALE: NONE

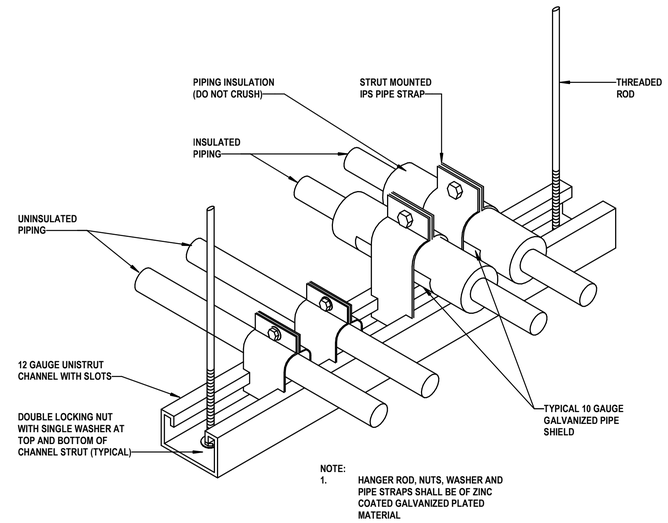

07 TRAPEZE PIPE SUPPORT
SCALE: NONE

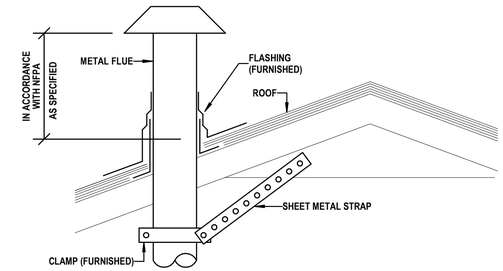

04 VENT ROOF TERMINATION
SCALE: NONE

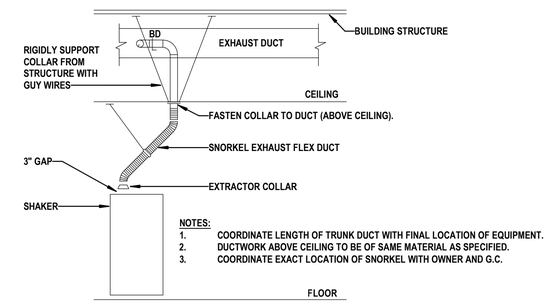

03 SNORKEL EXHAUST SYSTEM DETAIL
SCALE: NONE

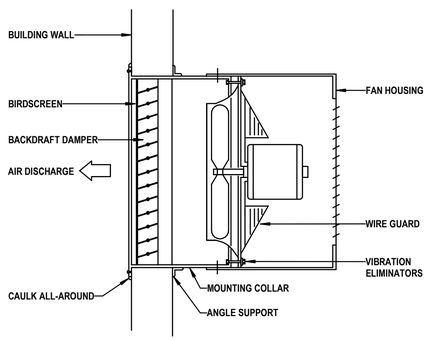

09 SIDEWALL DIRECT DRIVE FAN DETAIL
SCALE: NONE

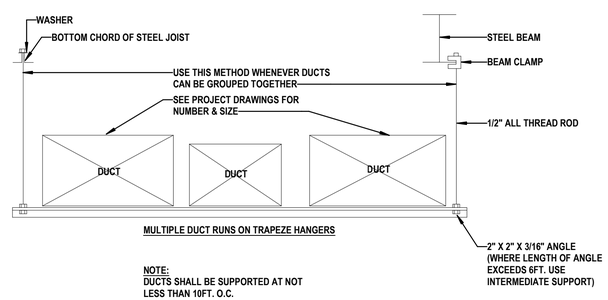

06 MULTIPLE DUCT RUNS ON TRAPEZE HANGERS
SCALE: NONE

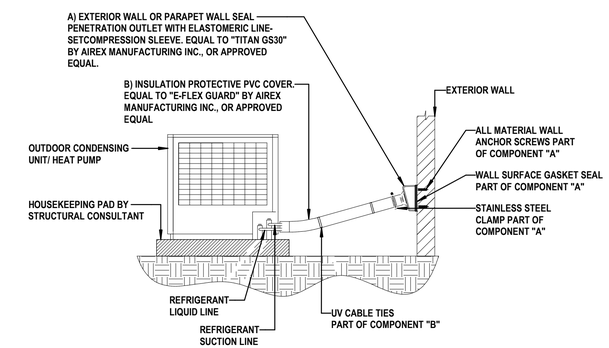

02 CU/HP REFRIGERANT PIPING PENETRATION DETAIL
SCALE:NONE

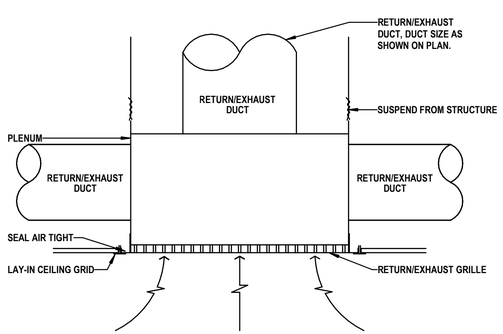

08 DUCTED RETURN EXHAUST GRILLE
SCALE: NONE

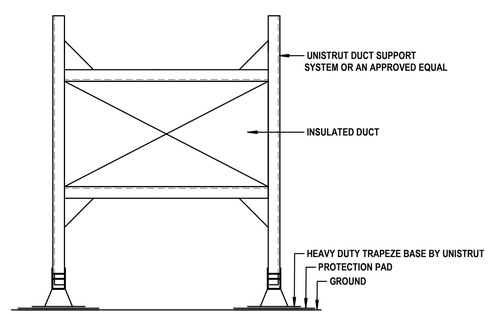

05 DUCT SUPPORT DETAIL
SCALE: NONE

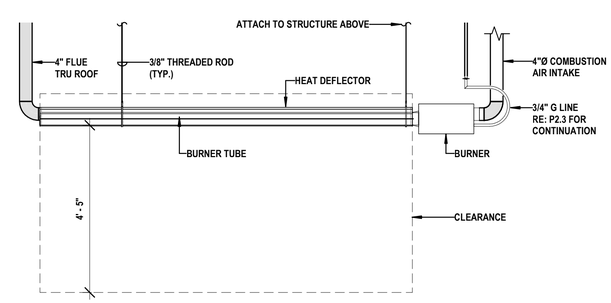

01 TYPICAL GAS FIRED RADIANT HEATER DETAIL
SCALE: NONE

Texas Department of Transportation

COPYRIGHT © 2021

DFW Consulting Group, Inc.
1616 Corporate Court, Suite 100
Irving, Tx 75038
(972) 929-1199
www.dfwcgi.com
Project No. :20014
Firm Registration No. :720

KENNETH DAVID MELINE 61722 REGISTERED PROFESSIONAL ENGINEER 04/21/2021

DALLAS DISTRICT (18)
COLLIN COUNTY
McKinney Area Engineering and Maintenance Facility
2205 TX-5, McKinney, TX 75069
PROJECT NO. 18-470420012

ISSUED: 2021.04.21
DRAWN BY: DFWCGI
REVISIONS:

MECHANICAL DETAILS

M5.2

THIS DRAWING CREATED FOR PRODUCTION ON 22"x34" SHEET SIZE DO NOT SCALE PRINTS.

HEAT PUMP SPLIT DX UNIT SEQUENCE OF OPERATION

A. HEAT PUMP SPLIT DX UNIT GENERAL DESCRIPTION - THE SPLIT DX UNIT CONSISTS OF A FAN, DX COOLING/HEATING COIL, EMERGENCY ELECTRIC HEATING COIL, AND THERMOSTAT.

B. SET POINTS: SET POINTS FOR THE SYSTEM SHALL BE DETERMINED AS FOLLOWS:
1. OCCUPIED COOLING SPACE TEMPERATURE SET POINT SHALL BE SET INITIALLY AT 75 °F (ADJ.).
2. OCCUPIED HEATING SPACE TEMPERATURE SET POINT SHALL BE SET INITIALLY AT 70 °F (ADJ.).
3. UNOCCUPIED COOLING SPACE TEMPERATURE SET POINT SHALL BE SET INITIALLY AT 82 °F (ADJ.).
4. UNOCCUPIED HEATING SPACE TEMPERATURE SET POINT SHALL BE SET INITIALLY AT 65 °F (ADJ.).

C. THE SPLIT DX UNIT SHALL BE CONTROLLED AS FOLLOWS:
1. THE SUPPLY FAN AND REFRIGERANT CIRCUITS SHALL MODULATE PER THE MANUFACTURER'S PREFERRED SEQUENCE TO MAINTAIN COOLING OR HEATING SETPOINTS.
2. RETURN AIR SMOKE DETECTOR SHALL SHUT DOWN UNIT WHEN SMOKE IS DETECTED.

DUCTLESS SPLIT UNIT SEQUENCE OF OPERATION

A. SPLIT DX UNIT GENERAL DESCRIPTION - THE SPLIT DX UNIT CONSISTS OF A FAN, DX COOLING COIL, AND THERMOSTAT.

B. SET POINTS: SET POINTS FOR THE SYSTEM SHALL BE DETERMINED AS FOLLOWS:
1. COOLING SPACE TEMPERATURE SET POINT SHALL BE SET INITIALLY AT 70 °F (ADJ.).

E. THE SPLIT DX UNIT SHALL BE CONTROLLED AS FOLLOWS:
1. THE SUPPLY FAN AND REFRIGERANT CIRCUITS SHALL MODULATE PER THE MANUFACTURER'S PREFERRED SEQUENCE TO MAINTAIN TEMPERATURE SETPOINT.
2. RETURN AIR SMOKE DETECTOR SHALL SHUT DOWN UNIT WHEN SMOKE IS DETECTED.

TRANSFER AIR FAN (TAF) SEQUENCE OF OPERATIONS

TRANSFER AIR FAN GENERAL DESCRIPTION - THE TRANSFER AIR FANS WILL PROVIDE TEMPERED TRANSFER AIR FROM THE CONDITIONED SPACE TO THE VESTIBULE AND WILL BE CONTROLLED BY A LINE VOLTAGE 7-DAY PROGRAMMABLE THERMOSTAT.

A. SETPOINTS:
1. OCCUPIED COOLING SPACE TEMPERATURE SET POINT SHALL BE SET INITIALLY AT 78 °F (ADJ.).
2. OCCUPIED HEATING SPACE TEMPERATURE SET POINT SHALL BE SET INITIALLY AT 68 °F (ADJ.).
3. UNOCCUPIED COOLING SPACE TEMPERATURE SET POINT SHALL BE SET INITIALLY AT 84 °F (ADJ.).
4. UNOCCUPIED HEATING SPACE TEMPERATURE SET POINT SHALL BE SET INITIALLY AT 63 °F (ADJ.).

B. FAN OPERATION:
1. THE TRANSFER AIR FAN WILL TURN ON AND OFF TO MAINTAIN THE COOLING OR HEATING SETPOINTS.

GENERAL NOTES - MECHANICAL.

1 MECHANICAL CONTRACTOR TO PROVIDE AND INSTALL SMOKE DETECTORS.

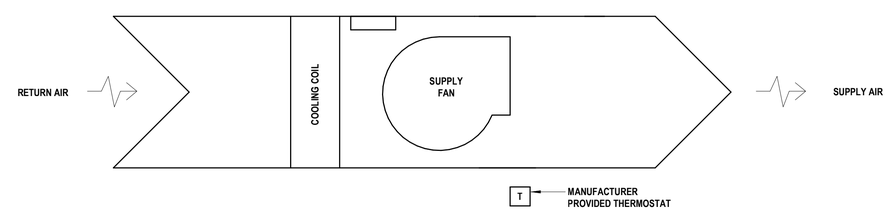

02 DUCTLESS SPLIT DX UNIT CONTROL DIAGRAM
SCALE:NONE

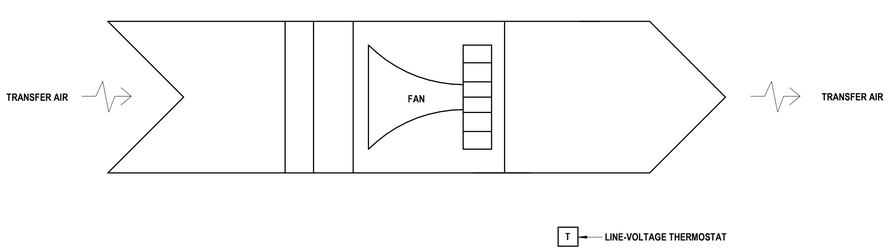

03 TRANSFER AIR FAN CONTROL DIAGRAM
SCALE:NONE

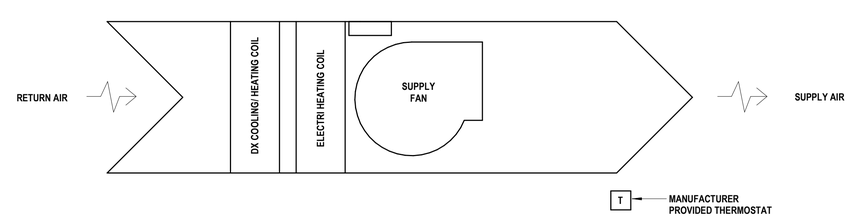

01 HEAT PUMP SPLIT DX UNIT CONTROL DIAGRAM
SCALE:NONE

Texas Department of Transportation
COPYRIGHT © 2021

DFW Consulting Group, Inc.
1616 Corporate Court, Suite 100
Irving, Tx 75038
(972) 929-1199
www.dfwcgi.com
Project No. :2004
Firm Registration No. :720

STATE OF TEXAS
KENNETH DAVID DIELINE
61722
REGISTERED PROFESSIONAL ENGINEER
04/21/2021

DALLAS DISTRICT (18)
COLLIN COUNTY
McKinney Area Engineering and Maintenance Facility
2205 TX-5, McKinney, TX 75069
PROJECT NO. 18-470420012

ISSUED: 2021.04.21
DRAWN BY: DFWCGI
REVISIONS:

MECHANICAL CONTROL DIAGRAMS

M6.1

THIS DRAWING CREATED FOR PRODUCTION ON 22"x34" SHEET SIZE DO NOT SCALE PRINTS.

VEHICLE EXHAUST FAN (VEF) SEQUENCE OF OPERATIONS

VEHICLE EXHAUST FAN VENTILATION:

A. FAN OPERATION:
   1. FAN SHALL START WHEN THE TOGGLE SWITCH IS IN THE ON POSITION, AND RUN CONTINUOUSLY.
   2. FAN SHALL STOP WHEN THE TOGGLE SWITCH IS IN THE OFF POSITION, AFTER A TIME DELAY OF 1 MINUTE (ADJ.).

PURGE FAN (PF) & MOD SEQUENCE OF OPERATIONS

THE GAS DETECTION SYSTEM SHALL BE ABLE TO ACTIVATE THE PURGE FANS, AND ALERT OCCUPANTS OF HAZARDOUS CONDITIONS.

A. ALARM LEVELS:
   1. LOW LEVEL ALARM GAS CONCENTRATION ARE AS FOLLOWS:
      a. CH4 (METAHNE/CNG), C3H8 (PROPANE/LPG) - 20% LFL.
      b. CO (CARBON MONOXIDE) - 35 PPM
      c. NO2 (NITROGEN DIOXIDE) - 1 PPM
   2. HIGH LEVEL ALARM GAS CONCENTRATION ARE AS FOLLOWS:
      a. CH4 (METAHNE/CNG), C3H8 (PROPANE/LPG) - 40% LFL.
      b. CO (CARBON MONOXIDE) - 100 PPM
      c. NO2 (NITROGEN DIOXIDE) - 3 PPM

B. INTERLOCKS OF GAS DETECTION SYSTEM WITH EXHAUST FANS SHALL BE PROVIDED AS FOLLOWS:
   1. NORMAL OPERATION: DURING NORMAL OPERATION CONDITIONS THE PURGE FAN (PF-1) SHALL BE ENERGIZED, AND PROVIDE CONTINUOUS VENTILATION BY SWEEPING THE FLOOR AND CEILING, TO SATIFY EXHAUST VENTILATION RATE OF 2 CFM/SQFT, (7650 CFM).
   2. PURGE OPERATION:
      A. LOW LEVEL ALARM: WHEN A LOW LEVEL ALARM IS DETECTED FROM THE GAS DETECTION SYSTEM THE FOLLOWING SEQUENCE SHALL BE IMPLEMENTED:
         a. THE PURGE FAN SHALL SPEED UP TO HIGH SPEED AIRFLOW OF 9000 CFM.
         b. ALL RADIANT HEATERS IN THE SPACE SHALL BE DEACTIVATED.
         c. LOW LEVEL ALARM LIGHT SHALL TURN ON
      B. HIGH LEVEL ALARM: WHEN A HIGH LEVEL ALARM IS DETECTED FROM THE GAS DETECTION SYSTEM THE FOLLOWING SEQUENCE SHALL BE IMPLEMENTED:
         a. THE PURGE FAN SHALL SPEED UP TO HIGH SPEED AIRFLOW OF 9000 CFM.
         b. ALL RADIANT HEATERS IN THE SPACE SHALL BE DEACTIVATED.
         c. HIGH LEVEL ALARM LIGHT SHALL TURN ON.
         d. STROBE LIGHT AND SIRENS SHALL TURN ON.
      C. NO ALARM DETECTED: WHEN NO ALARMS ARE DETECTED, ALL SYSTEMS SHALL RETURN TO NORMAL STATE OF OPERATION.

C. MOTORIZED DAMPER OPERATION:
   1. THE MOTORIZED DAMPERS SHALL BE INTERLOCKED WITH THE PURGE FAN OPERATION AND BE OPEN WHEN THE PURGE FAN IS ENERGIZED AND CLOSED WHEN THE PURGE FAN IS DE-ENERGIZED.

D. WHEN GAS DETECTION SYSTEM CONTROLLER IS IN FAULT STATUS, THE PURGE FAN SHALL SPEED UP TO HIGH SPEED AIRFLOW OF 9000 CFM AND THE FAULT LIGHT SHALL BE ENERGIZED IN THE CONTROLLER.

DUST COLLECTOR & MOD 8, 9, & 10 SEQUENCE OF OPERATIONS

DUST COLLECTOR VENTILATION:

A. FAN OPERATION:
   1. THE DUST COLLECTOR SHALL BE INTERLOCKED WITH THE DOAS SYSTEM, AND BE ENABLED DURING OCCUPIED HOURS.
   2. THE DUST COLLECTOR SHALL BE INTERLOCKED WITH THE DOAS SYSTEM, AND BE DISABLED DURING UNOCCUPIED HOURS.

B. MOTORIZED DAMPER OPERATION:
   1. WHEN THE THE DUST COLLECTOR IS SWITCHED ON, THE NORMALLY OPEN RETURN AIR MOTORIZED DAMPERS (MOD-8 & MOD-9) SHALL CLOSE AND THE NORMALLY CLOSED MAKE UP AIR MOTORIZED DAMPER (MOD-10) SHALL OPEN.
   2. WHEN THE THE DUST COLLECTOR IS SWITCHED OFF, THE RETURN AIR MOTORIZED DAMPERS (MOD-8 & MOD-9) SHALL OPEN AND THE MAKE UP AIR MOTORIZED DAMPER (MOD-10) SHALL CLOSE.

C. SMOKE DETECTOR SHALL SHUT DOWN UNIT WHEN SMOKE IS DETECTED.

GENERAL NOTES - MECHANICAL.

1 MECHANICAL CONTRACTOR TO PROVIDE AND INSTALL SMOKE DETECTORS.

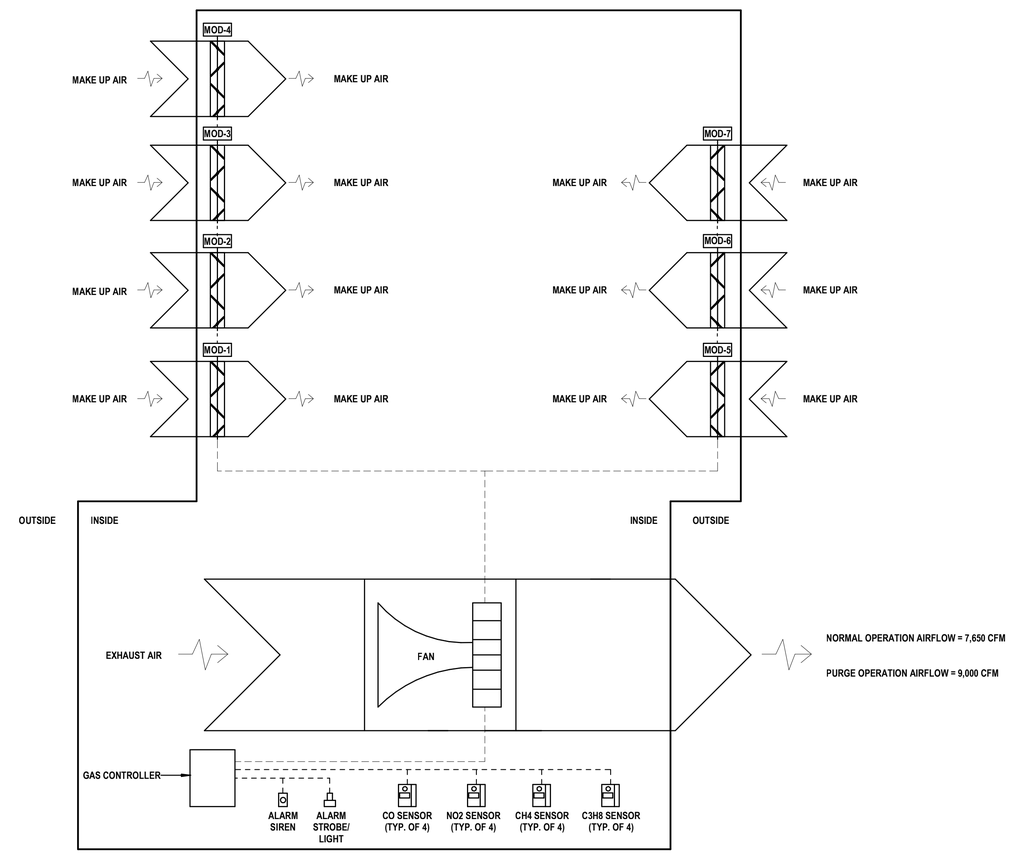

02 PURGE FAN & MOD CONTROL DIAGRAM
SCALE:NONE

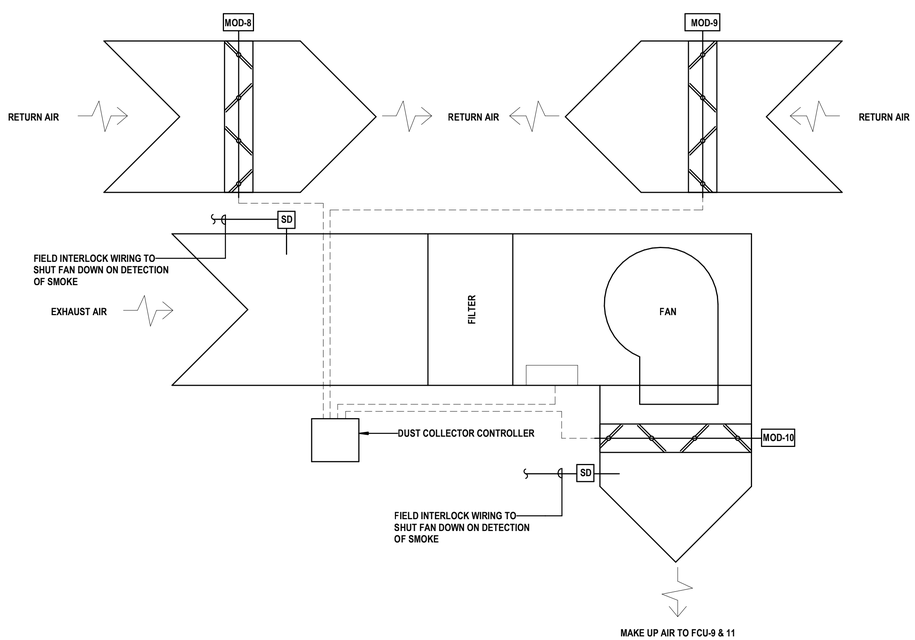

03 DUST COLLECTOR & MOD-3, 4, & 5 CONTROL DIAGRAM
SCALE:NONE

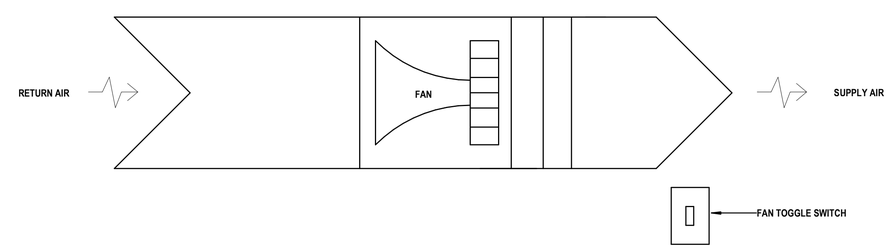

01 VEHICLE EXHAUST FAN CONTROL DIAGRAM
SCALE:NONE

Texas Department of Transportation

COPYRIGHT © 2021

DFW Consulting Group, Inc.
1616 Corporate Court, Suite 100
Irving, Tx 75038
(972) 929-1199
www.dfwcgi.com
Project No. :20014
Firm Registration No. :720

KENNETH DAVID MELINE 61722 REGISTERED PROFESSIONAL ENGINEER 04/21/2021

DALLAS DISTRICT (18)
COLLIN COUNTY
McKinney Area Engineering and Maintenance Facility
2205 TX-5, McKinney, TX 75069
PROJECT NO. 18-470420012

ISSUED: 2021.04.21
DRAWN BY: DFWCGI
REVISIONS:

MECHANICAL CONTROL DIAGRAMS

M6.2

THIS DRAWING CREATED FOR PRODUCTION ON 22"x34" SHEET SIZE. DO NOT SCALE PRINTS.

DOAS-1 SEQUENCE OF OPERATION

A. SET POINTS: SET POINTS FOR THE SYSTEM SHALL BE DETERMINED AS FOLLOWS:
   1. THE SUPPLY AIR TEMPERATURE SETPOINT SHALL BE INITIALLY SET AT 75°F (ADJ.).

B. UNIT OPERATION - WHEN THE SYSTEM STARTUP HAS BEEN INITIATED, THE FOLLOWING SEQUENCES SHALL BE IMPLEMENTED:
   1. SUPPLY AIR TEMPERATURE CONTROL: THE UNIT'S ONBOARD CONTROLLER SHALL APPLY THE MANUFACTURER'S PREFERRED CONTROL SEQUENCES TO MAINTAIN THE SUPPLY AIR TEMPERATURE SETPOINT.
   2. ENERGY RECOVERY VENTILATOR OPERATION: THE UNIT'S ONBOARD CONTROLLER SHALL APPLY THE MANUFACTURER'S PREFERRED CONTROL SEQUENCE TO CONTROL THE OPERATION OF THE ENERGY RECOVERY VENTILATOR.
   3. HIGH DUCT STATIC CUTOUT: IF THE HIGH STATIC SWITCH TRIPS, THE ONBOARD SAFETY CIRCUIT SHALL TURN OFF THE OPERATING FAN.
   4. ECONOMIZER MODE: THE UNIT'S ONBOARD CONTROLLER SHALL APPLY THE MANUFACTURER'S PREFERRED CONTROL SEQUENCE WHEN ECONOMIZER MODE IS ENGAGED.
   5. SMOKE DETECTOR: IF ANY SMOKE IS DETECTED IN THE SUPPLY, OR THE RETURN/EXHAUST, AIR STREAM:
      a. THE SMOKE DETECTOR SHALL TURN OFF THE FAN.

C. POWER FAILURE - WHEN A POWER OR COMPONENT FAILURE OCCURS:
   1. DOAS UNITS SHALL REMAIN AT THE LAST COMMANDED STATE.
   2. DOAS UNIT SHALL RESUME OPERATIONS AT THE LAST COMMANDED STATE WHEN POWER IS RESTORED.

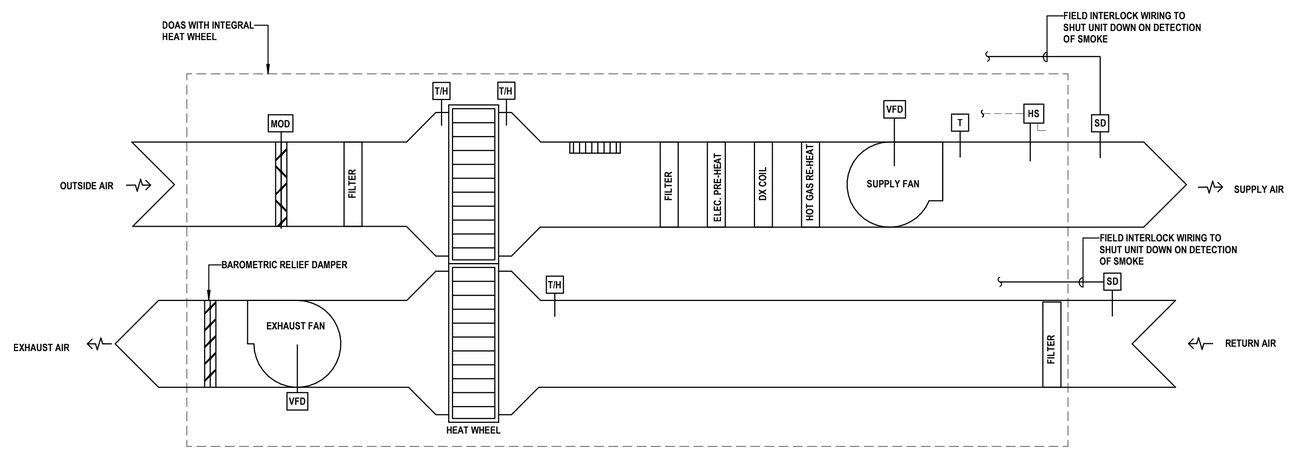

01 DOAS-1 CONTROL DIAGRAM
SCALE:NONE

Texas Department of Transportation
COPYRIGHT © 2021

DFW Consulting Group, Inc.
1616 Corporate Court, Suite 100
Irving, Tx 75038
(972) 929-1199
www.dfwcgi.com
Project No. :20044
Firm Registration No. :720

STATE OF TEXAS
KENNETH DAVID MELINE
61722
REGISTERED PROFESSIONAL ENGINEER
04/21/2021

DALLAS DISTRICT (18)
COLLIN COUNTY
McKinney Area Engineering and Maintenance Facility
2205 TX-5, McKinney, TX 75069
PROJECT NO. 18-470420012

ISSUED: 2021.04.21
DRAWN BY: DFWCGI
REVISIONS:

MECHANICAL CONTROL DIAGRAMS

M6.3

THIS DRAWING CREATED FOR PRODUCTION ON 22"x34" SHEET SIZE. DO NOT SCALE PRINTS.

ABBREVIATIONS

ABV	ABOVE
ADA	AMERICANS WITH DISABILITIES ACT
AD	AREA DRAIN
AFF	ABOVE FINISHED FLOOR
AL	ALUMINUM
AI	ANALOG INPUT
AO	ANALOG OUTPUT
APD	AIR PRESSURE DROP
AST	ABOVE GROUND STORAGE TANK
BAS	BUILDING AUTOMATION SYSTEM
BFF	BELOW FINISHED FLOOR
BFP	BACKFLOW PREVENTER
BDD	BACKDRAFT DAMPER
BHP	BRAKE HORSEPOWER
BOD	BOTTOM OF DUCT
BOE	BOTTOM OF EQUIPMENT
BTU	BRITISH THERMAL UNIT
BTUH	BRITISH THERMAL UNIT PER HOUR
C	CONDUIT
CA	COMPRESSED AIR
CB	CIRCUIT BREAKER
CD	CONDENSATE DRAIN
CFM	CUBIC FEET PER MINUTE
CFS	CUBIC FEET PER SECOND
CLG	CEILING
CHR	CHILLED WATER RETURN
CHS	CHILLED WATER SUPPLY
CO	CLEANOUT
CR	CONDENSER WATER RETURN
CS	CONDENSER WATER SUPPLY
CW	DOMESTIC COLD WATER
CU	COPPER
DB	DRY BULB
DCO	DOUBLE CLEANOUT
DI	DIGITAL INPUT
DN	DOWN
DO	DIGITAL OUTPUT
DT	DAY TANK
(E)	EXISTING
EAG	EXHAUST AIR GRILLE/REGISTER
EAT	ENTERING AIR TEMPERATURE
E.C.	EMPTY CONDUIT
EFF	EFFICIENCY
EPO	EMERGENCY POWER OFF
ERV	ENERGY RECOVERY VENTILATION
ESP	EXTERNAL STATIC PRESSURE
EWC	ELECTRIC WATER COOLER
EWH	ELECTRIC WATER HEATER
EWT	ENTERING WATER TEMPERATURE
EXH.	EXHAUST
(F)	FUTURE
°F	DEGREES FARENHEIT
FCO	FLOOR CLEANOUT
FD	FIRE DAMPER
FDC	FIRE DEPARTMENT CONNECTION
FDS	FUSED DISCONNECT SWITCH
FLA	FULL LOAD AMPS
FLD	FLOOR DRAIN
FL	FLOW LINE
FO	FLAT OVAL DUCT
FOR	FUEL OIL RETURN
FOS	FUEL OIL SUPPLY
FP	FIRE PROTECTION WATER
FPI	FINS PER INCH
FPM	FEET PER MINUTE
FSD	COMBINATION FIRE SMOKE DAMPER
FT	FEET
FU	FIXTURE UNITS
FV	FACE VELOCITY
G	GAS
GCO	GRADE CLEANOUT
GE	GENERAL EXHUAST
GFI	GROUND FAULT INTERUPTER
GM	GAS METER
GND	GROUND
GPH	GALLONS PER HOUR
GPM	GALLONS PER MINUTE
GRS	GALVANIZED RIGID STEEL
GW	GREASY WASTE
GWH	GAS WATER HEATER
HB	HOSE BIBB
HD	HUB DRAIN
HG	REFRIGERANT HOT GAS
HI	HARDWIRE INTERLOCK
HP	HORSEPOWER
HR	HEATING HOT WATER RETURN
HS	HEATING HOT WATER SUPPLY
HW	DOMESTIC HOT WATER
HWC	DOMESTIC HOT WATER RECIRCULATION
HX	HEAT EXCHANGER
IG	ISOLATED GROUND
IWH	INSTANTANEOUS WATER HEATER
IW	INDIRECT WASTE
IWV	INDIRECT WASTE VENT
KW	KILOWATT
L	LAVATORY
LAT	LEAVING AIR TEMPERATURE
LE	LAB EXHAUST
LBS	POUNDS
MATV	MASTER ANTENNA TELEVISION SYSTEM
MB	MOP BASIN
MBH	THOUSANDS OF BTUS PER HOUR
MCA	MINIMUM CIRCUIT AMPS
MFG	MANUFACTURER
MOCP	MAXIMUM OVERCURRENT PROTECTION
MTD	MOUNTED
NC	NOISE CRITERIA
NIC	NOT IN CONTRACT
N3R	NEMA 3R
O	OXYGEN
OA	OUTSIDE AIR
OBD	OPPOSED BLADE DAMPER
OCD	OVERFLOW CONDENSATION
OCPD	OVERCURRENT PROTECTIVE DEVICE
OFCI	OWNER FURNISHED CONTRACTOR INSTALLED
OFD	OVERFLOW ROOF DRAIN
OSD	OVERFLOW STORM DRAIN
PBD	PARALLEL BLADE DAMPER
PH	PHASE
PP	POWER POLE
PSI	POUNDS PER SQUARE INCH
PSIG	POUNDS PER SQUARE INCH (GAGE)
PVC	POLYVINYL CHLORIDE PIPE
(R)	RELOCATED
RA	RETURN AIR
RABL	RETURN AIR BOOT (L-SHAPED)
RABU	RETURN AIR BOOT (U-SHAPED)
RAG	RETURN AIR GRILLE/REGISTER
RD	ROOF DRAIN
RL	REFRIGERANT LIQUID
RPM	REVOLUTIONS PER MINUTE
RPZ	REDUCED PRESSURE ZONE
RS	REFRIGERANT SUCTION
RTU	ROOFTOP UNIT
S	SINK
SA	SUPPLY AIR
SAG	SUPPLY AIR GRILLE/REGISTER
SAN	SANITARY SEWER
SD	STORM DRAIN
SF	SQUARE FEET
SMD	SMOKE DAMPER
SP	STATIC PRESSURE
SPD	STATIC PRESSURE DROP
TPV	TRAP PRIMER VALVE
TPD	TOTAL PRESSURE DROP
TP	TOTAL PRESSURE
TW	DOMESTIC TEMPERED WATER
U	URINAL
UF	UNDERFLOOR
UG	UNDERGROUND
U.N.O	UNLESS NOTED OTHERWISE
V	VENT
VAC	VACUUM
VFD	VARIABLE FREQUENCY DRIVE
VIF	VERIFY IN FIELD
VTR	VENT THROUGH ROOF
W	SANITARY WASTE
WB	WET BULB
WC	WATER CLOSET
WCO	WALL CLEANOUT
WP	WEATHER PROOF
WPD	WATER PRESSURE DROP
WSHP	WATER-SOURCE HEAT PUMP
"WC	INCHES WATER COLUMN
"WG	INCHES WATER GAUGE
WM	WALL MOUNTED
XFMR	TRANSFORMER

BASIS OF DESIGN

CODES:
MECHANICAL: 2018 INTERNATIONAL MECHANICAL CODE, WITH AMENDMENTS
ELECTRICAL: 2020 NATIONAL ELECTRICAL CODE, WITH AMENDMENTS
PLUMBING: 2018 INTERNATIONAL PLUMBING CODE, WITH AMENDMENTS
ENERGY: 2018 INTERNATIONAL ENERGY CODE, WITH AMENDMENTS

ELECTRICAL SYSTEM DESIGN:

THE NEW BUILDING WILL BE SERVED BY A NEW 208V, 3 PHASE ELECTRICAL SERVICE FED FROM A NEW PAD MOUNTED UTILITY TRANSFORMER ON SITE. PROVIDE (1) 1600A SERVICE ENTRANCE RATED DISCONNECT WITH A NEMA 3R ENSLOSURE, (1) 1600A BYPASS ISOLATION ATS, AND (1) 24 HOUR EMERGENCY GENERATOR WITH A WEATHER PROOF/SOUND PROOF ENCLOSURE. PROVIDE A 208/120V DISTRIBUTION PANEL FOR MECHANICAL EQUIMENT, PLUMBING EQUIPMENT, LIGHTING, AND GENERAL POWER REQUIREMENTS.

REFER TO TXDOT FACILITIES MANAGEMENT PROJECT DEVELOPMENT PROGRAM ELECTRICAL DESIGN GUIDE FOR ADDITIONAL PROJECT REQUIREMENTS.

PRICING NOTES

THE ENTIRE SCOPE OF THE CONTRACTORS WORK IS SHOWN THROUGHOUT THE ENTIRE SET OF DOCUMENTS. IT SHALL BE EACH CONTRACTOR'S RESPONSIBILITY TO THOROUGHLY REVIEW THE ENTIRE SET OF DOCUMENTS INCLUDING, BUT NOT LIMITED TO, THE ENTIRE MECHANICAL, ELECTRICAL, PLUMBING, ARCHITECTURAL, STRUCTURAL, CIVIL, AND AUDIO/VISUAL DOCUMENTS AND INCLUDE ALL SCOPE IN THE CONTRACTORS RESPONSIBILITY EVEN IF IT IS NOT SHOWN DIRECTLY ON THEIR RESPECTIVE TRADES' DOCUMENTS.

THE CONTRACTOR'S BID PRICE SHALL INCLUDE ALL PARTS AND ITEMS NECESSARY FOR A COMPLETE WORKING SYSTEM, EVEN IF EVERY PART IS NOT DOCUMENTED IN THE DRAWINGS.

ELECTRICAL AND LIGHTING SYMBOLS

	REPRESENTS DEMO WORK
LV	LOW VOLTAGE
	CONDUIT
	UNDERGROUND/UNDERFLOOR CONDUIT
	WIRE MOLD
	HOMERUN
	NEUTRAL CONDUCTOR
	HOT CONDUCTOR
	GROUND CONDUCTOR
	SINGLE RECEPTACLE
	DUPLEX RECEPTACLE MOUNT @ 18" A.F.F. U.N.O.
	ABOVE COUNTER DUPLEX RECEPTACLE MOUNT @ 42" A.F.F. U.N.O.
	QUADRUPLEX REPTACLE MOUNT @ 18" A.F.F. U.N.O.
	ABOVE COUNTER QUADRUPLEX RECEPTACLE MOUNT @ 42" A.F.F. U.N.O.
	COMBINATION USB/ DUPLEX RECEPTACLE MOUNT @ 18" A.F.F. U.N.O.
	ABOVE COUNTER COMBINATION USB/DUPLEX REPTACLE MOUNT @ 42" A.F.F. U.N.O.
	COMBINATION USB/ QUADRUPLEX RECEPTACLE
	ABOVE COUNTER COMBINATION USB/QUADRUPLEX REPTACLE MOUNT @ 42" A.F.F. U.N.O.
	SPECIAL PURPOSE RECEPTACLE (VERIFY EXACT NEMA CONFIGURATION)
	SWITCHED DUPLEX RECEPTACLE
	SWITCHED QUAD RECEPTACLE
	FLUSH FLOOR MOUNT DUPLEX RECEPTACLE
	CEILING MOUNTED DUPLEX RECEPTACLE
	FLOOR MOUNTED QUADRUPLEX REPTACLE
	CEILING MOUNTED QUADRUPLEX REPTACLE
	FLUSH FLOOR COMBINATION DUPLEX/DATA/TELE OUTLET
	FLUSH FLOOR COMBINATION QUAD/DATA/TELE OUTLET
	TRANSFORMER
	208/120V ELECTRICAL PANEL BOARD
	480/277V ELECTRICAL PANEL BOARD
	1 LINE PANEL BOARD
	SWITCH BOARD
	DATA COMMUNICATIONS OUTLET RUN 3/4" E.C. TO 6" ABV. CLG.
	TELEPHONE OUTLET RUN 3/4" E.C. TO 6"ABV. CLG.
	TELEPHONE / DATA OUTLET RUN 3/4" E.C. TO 6" ABV. CLG.
F	FIREMAN'S TELEPHONE JACK
	FLUSH FLOOR DATA OUTLET
	FLUSH FLOOR TELEPHONE OUTLET
	FLUSH FLOOR TELE/DATA OUTLET
	CEILING MOUNTED DATA OUTLET
	CEILING MOUNTED TELEPHONE OUTLET
	CEILING MOUNTED TELE/DATA OUTLET
	PUSH-BUTTON
	DISCONNECT SWITCH
	FUSED DISCONNECT SWITCH A/B/C/D/ A=AMPERAGE B=NO. OF POLES C=FUSE D=NEMA RATING, IF NOT NOTED REFER TO SPECIFICATIONS
	COMBINATION MOTOR STARTER
	VFD (VARIABLE FREQUENCY DRIVE)
	SPD (SURGE PROTECTIVE DEVICE)
	ENCLOSED CIRCUIT BREAKER DISCONNECT
	POWER POLE
	MOTOR
J	JUNCTION BOX
J	WALL MOUNTED JUNCTION BOX
	J/BOX FOR VOICE/DATA COMMUNICATIONS CABLE FOR MODULAR FURNITURE SYSTEM. RUN 1-1/4" E.C. W/PULL STRING TO 6" ABOVE CEILING
P	J/BOX FOR POWER TO MODULAR FURNITURE SYSTEM.
$	SWITCH
$3	THREE-WAY SWITCH
$4	FOUR-WAY SWITCH
$M	MOTOR RATED SWITCH
$T	TIMER SWITCH
$D	DIMMER SWITCH
$LV	LOW VOLTAGE SWITCH
$LVD	LOW VOLTAGE DIMMING SWITCH
$OC	WALL MOUNTED OCCUPANCY SENSOR
M	CEILING MOUNTED OCCUPANCY SENSOR
DS	CEILING MOUNTED DAYLIGHT SENSOR
	GROUND ROD W/TEST WELL
G	GROUND ROD
K	SECURITY KEY PAD
KP	KEY PAD
CR	CARD READER SECURITY SYSTEM CAM-LOCK DEVICE
DC	DOOR CONTACT
ML	MAGNETIC LOCK
MH	MAGNETIC HOLD-OPEN DEVICE
PC	PHOTOELECTRIC CELL
TC	TIME CLOCK
IC	INTERCOM
ICM	INTERCOM CALL MASTER STATION
CM	SQUARE D POWERLOGIC CIRCUIT MONITOR
VESDA	VESDA CONTROL PANEL
VR	VEEDER ROOT
RCP	REMOTE FIRE ALARM CONTROL PANEL
TS	FIRE ALARM SYSTEM TAMPER SWITCH
FAA	FIRE ALARM ANNUNCIATOR PANEL
FACP	FIRE ALARM CONTROL PANEL
GEN	GENERATOR REMOTE ALARM
GAP	GENERATOR REMOTE ANNUNCIATOR PANEL
	GENERATOR
	CLEAN AGENT RELEASE
	CLEAN AGENT STORAGE BOTTLE
F	AUDIO/VISUAL FIRE ALARM DEVICE
F	CEILING FIRE ALARM DEVICE
S	FIRE STROBE
F	PULL STATION
M	METER
M	METER
K	KIRK-KEY INTERLOCK
V	VESDA
	CEILING SPEAKER, NOTE: SUB SCRIPT 'F' DENOTES FIRE ALARM
	WALL HUNG SPEAKER, NOTE: SUB SCRIPT 'F' DENOTES FIRE ALARM SMOKE DETECTOR
	UNDERFLOOR SMOKE DETECTOR
	DUCT MOUNTED SMOKE DETECTOR
	REMOTE PILOT LIGHT
	HEAT DETECTOR
BF	HEAT DETECTOR BELOW FLOOR
	FLAME DETECTOR
TV	COMBINATION DUPLEX RECEPTACLE/DATA TELEVISION OUTLET MTD 96" A.F.F. WITH 3/4" CONDUIT CONNECTION TO OTHER DEVICES, U.N.O.
	2' X 4' FIXTURE - REFERENCE LIGHT FIXTURE SCHEDULE
	SAME AS 2' X 4' EXCEPT WITH EMERGENCY BATTERY PACK
	2' X 2' FIXTURE - REFERENCE LIGHT FIXTURE SCHEDULE
	SAME AS 2' X 2' EXCEPT WITH EMERGENCY BATTERY PACK
	STRIP FIXTURE- REFERENCE LIGHT FIXTURE SCHEDULE
	STRIP FIXTURE - WITH EMERGENCY BATTERY PACK
	DOWNLIGHT - REFERENCE LIGHT FIXTURE SCHEDULE
	WALL WASHER - REFERENCE LIGHT FIXTURE SCHEDULE
	SAME AS DOWNLIGHT EXCEPT WITH EMERGENCY BATTERY PACK
	WALL MOUNTED LIGHT FIXTURE - REFERENCE LIGHT FIXTURE SCHEDULE
	LIGHT FIXTURE - REFERENCE LIGHT FIXTURE SCHEDULE
	POLE LIGHT - REFERENCE LIGHT FIXTURE SCHEDULE. NOTE: REFERENCE PLANS FOR NUMBER OF FIXTURE HEADS
	SINGLE FACE EXIT SIGN - SHADED AREA INDICATES ILLUMINATED FACE - REFERENCE LIGHT FIXTURE SCHEDULE
	DOUBLE FACE EXIT SIGN - SHADED AREA INDICATES ILLUMINATED FACE - REFERENCE LIGHT FIXTURE SCHEDULE
	WALL MOUNTED EXIT SIGN - REFERENCE LIGHT FIXTURE SCHEDULE
	EMERGENCY LIGHTING FIXTURE MK 'EM' U.N.O. - REFERENCE LIGHT FIXTURE SCHEDULE
	DELTA CONNECTION
	WYE-CONNECTION
	CIRCUIT BREAKER
	DISCONNECT/INTERRUPTER SWITCH
	FUSE
	CAPACITOR
	SERVICE WEATHERHEAD
	GROUND CONNECTION
	TRANSFORMER
	CONTROL POWER TRANSFORMER
	POTENTIAL TRANSFORMER
	CURRENT TRANSFORMER
	CABLE POT HEAD
	BUS DUCT
GFR	GROUND FAULT RELAY
	FUSED CUTOUT
	CONTACTOR, NORMALLY CLOSED
	CONTACTOR, NORMALLY OPEN
	TRANSFER SWITCH
	SWITCH
	BATTERY
	LIGHTNING ARRESTER
	DRAWOUT CONNECTION
	ELECTRIC RESISTANCE HEATER
	GROUND BAR
	CCTV CAMERA
	VIA LIGHTING CONTACTOR
52	MEDIUM VOLTAGE CIRCUIT BREAKER
50/51	TIME DELAY AND INSTANTANEOUS OVERCURRENT PROTECTIVE RELAY

Texas Department of Transportation

COPYRIGHT © 2021

DFW Consulting Group, Inc.
1616 Corporate Court, Suite 100
Irving, Tx 75038
(972) 929-1199
www.dfwcgi.com
Project No. .2004
Firm Registration No. :720

STATE OF TEXAS
JOHN HALEY
112905
LICENSED
PROFESSIONAL ENGINEER
04/21/2021

DALLAS DISTRICT (18)
COLLIN COUNTY
McKinney Area Engineering and Maintenance Facility
2205 TX-5, McKinney, TX 75069
PROJECT NO. 18-470420012

ISSUED: 2021.04.21
DRAWN BY: DFWCGI
REVISIONS:

ELECTRICAL LEGENDS & ABBREVIATION

E0.1

THIS DRAWING CREATED FOR PRODUCTION ON 22"x34" SHEET SIZE. DO NOT SCALE PRINTS.

Luminaire Schedule							
Symbol	Type	Qty	Manufacturer / Catalog Number	Total Lumen Output	Total Input Watts	Light Lost Factor	User Defined Factor
	S-EXIST	3	TRASTAR DURA ST40 4K VOLTAGE 2 GR OPTIONS	23191	184.51	1.000	1.000
	S1	4	LITHONIA DSX0 LED P4 40K T4M MVOLT MOUNTING OPTIONS FINISH	10334	92	1.000	1.000
	S2	20	LITHONIA DSX0 LED P3 40K T5M MVOLT MOUNTING OPTIONS FINISH	17536	142	1.000	1.000
	W	30	LITHONIA DSXW1 LED 10C 1000 40K T4M MVOLT MOUNTING OPTIONS FINISH	3795	38.8	1.000	1.000

Calculation Summary						
Calculation Grid Location	Calc. Height (Ft.)	Units	Avg	Max	Min	Avg/Min
GRADE_Planar	0	Fc	1.46	7.9	0.0	N.A.
PARKING+DRIVE		Fc	2.32	7.7	0.0	N.A.

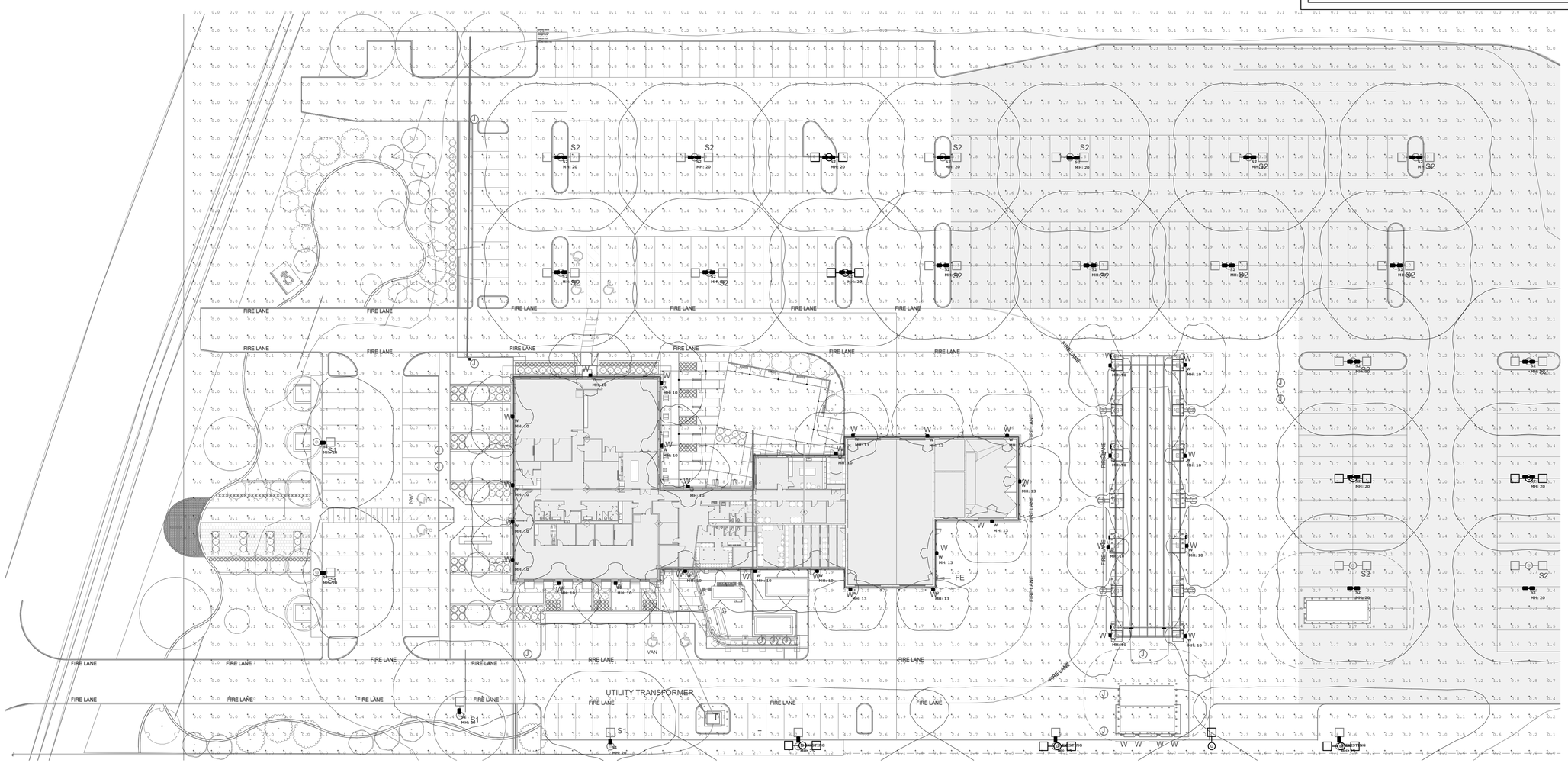

01 ELECTRICAL SITE PHOTOMETRIC PLAN

SCALE: 1/32" = 1'-0"

KEYPLAN

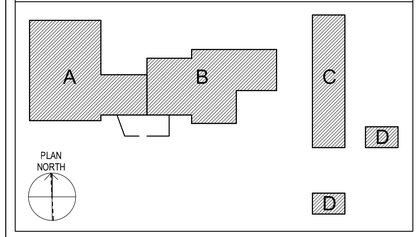

SCALES

1/32" = 1'-0"

32' 24' 16' 8' 0' 16' 32' 64'

Texas Department of Transportation

COPYRIGHT © 2021

DFW Consulting Group, Inc.
1616 Corporate Court, Suite 100
Irving, Tx 75038
(972) 929-1199
www.dfwcgi.com
Project No. .2004
Firm Registration No. .720

STATE OF TEXAS
JOHN HALEY
112905
LICENSED
PROFESSIONAL ENGINEER
04/21/2021

DALLAS DISTRICT (18)
COLLIN COUNTY

McKinney Area Engineering and Maintenance Facility

2205 TX-5, McKinney, TX 75069

PROJECT NO. 18-470420012

ISSUED: 2021.04.21

DRAWN BY: DFWCGI

REVISIONS:

ELECTRICAL SITE PHOTOMETRIC PLAN

E1.1

THIS DRAWING CREATED FOR PRODUCTION ON 22"x34" SHEET SIZE DO NOT SCALE PRINTS.

KEYED NOTES BY SYMBOL "⬡"

1	JUNCTION BOX FOR SECURITY GATE CONTROLLER. ROUTE 1" CONDUIT WITH PULL STRING UNDERGROUND FROM JUNCTION BOX AND STUB UP INTO MDF ROOM 116. FIELD COORDINATE CONDUIT ROUTING AND CONTROLS WITH TELECOM AND SECURITY VENDOR.
2	JUNCTION BOX FOR FUTURE ELECTRIC VEHICLE CHARGING STATION. ROUTE 2" EMPTY CONDUIT WITH PULL STRING UNDERGROUND FROM JUNCTION BOX AND STUB UP INTO ELECTRICAL ROOM 117.
3	JUNCTION BOX FOR EMERGENCY GENERATOR WATER JACKET HEATER, BATTERY CHARGER, AND ENCLOSURE LIGHTS/RECEPTACLES. ROUTE (1) 2" CONDUIT WITH PULL STRING FOR WATER JACKET HEATER, AND (2) 1" CONDUITS WITH PULL STRING FOR BATTERY CHARGER AND LIGHTS/RECEPTALE POWER. COORDINATE STUB UP LOCATIONS WITH GENERATOR MANUFACTURER PRIOR TO ROUGH-IN.
4	JUNCTION BOX FOR PROPANE STATION POWER. ROUTE (1) 3/4" CONDUIT UNDERGROUND FROM JUNCTION BOX AND STUB UP INTO PANEL 'FE'. CONTRACTOR TO FIELD COORDINATE INSTALLATION LOCATION BASED ON EXISTING INSTALLATION PRIOR TO INSTALLATION OF NEW CONDUITS.
5	CONNECT EXISTING POLE LIGHTS TO INDICATED NEW SITE LIGHTING BRANCH CIRCUIT. CONTRACTOR TO VERIFY THAT CIRCUIT AMPACITY DOES NOT EXCEED 14 AMPS.
6	NOT USED.
7	SITE LIGHTING POLE. REFER TO DETAIL 03/E5.1.
8	APPROXIMATE CLASS 1, DIVISION 2 BOUNDARY FOR FUEL STATION. PROVIDE EXPLOSION PROOF RATED FITTINGS FOR CLASS AND DIVISION OF THE AREA.
9	MOUNT PANEL 'FE', EPO SWITCHES, AND EXTERNAL ALARMS. COORDINATE EXACT LOCATION WITH ARCHITECT PRIOR TO ROUGH-IN.
10	REFER TO GROUND ROD TEST WELL DETAIL ON SHEET 04/E5.1.
11	PROVIDE DUAL PURPOSE DOCKING/LOAD-BANK STATION. REFER TO 01/E3.1 FOR ADDITIONAL DETAILS.
12	RELOCATE EXISTING POLE LIGHT. SEE KEYED NOTE 14 FOR NEW LOCATION.
13	RELOCATED EXISTING FIXTURE.
14	COORDINATE ALL CONSTRUCTION REQUIREMENTS WITH ONCOR PRIOR TO CONSTRUCTION.
15	REFER TO FS1.1 FOR ADDITIONAL DETAILS. CONTRACTOR TO FIELD COORDINATE INSTALLATION BASED ON EXISTING INSTALLATION PRIOR TO INSTALLATION OF NEW CONDUITS.

GENERAL NOTES - SITE

1	REFER TO 01/E1.1 FOR THE SITE PHOTOMETRIC PLAN.
2	REFER TO LIGHTING CONTROL DRAWINGS ON SHEETS E5.2 THRU E5.4 FOR ADDITIONAL INFORMATION.
3	LIGHTNING PROTECTION PERFORMANCE SPECIFICATION PROVIDED FOR A UL MASTER LABELED LIGHTNING PROTECTION SYSTEM. SYSTEM SHALL BE DESIGNED BY A MASTER LIGHTNING PROTECTION DESIGNER. REFER TO LIGHTNING PROTECTION SPECIFICATION SECTION 264113 - LIGHTNING PROTECTION FOR STRUCTURES.
4	COORDINATE ALL CONDUIT PATHS WITH CIVIL ENGINEERING PRIOR TO INSTALLATION.
5	REFER TO FUEL STATION DRAWINGS ON SHEETS FS1.1 THRU FS1.4 FOR ADDITIONAL INFORMATION.

KEYPLAN

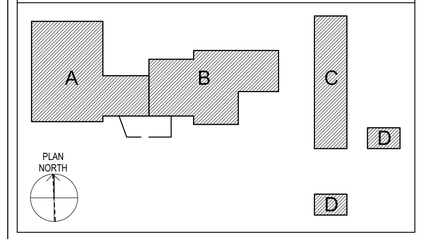

SCALES

1/32" = 1'-0"

32' 24' 16' 8' 0' 16' 32' 64'

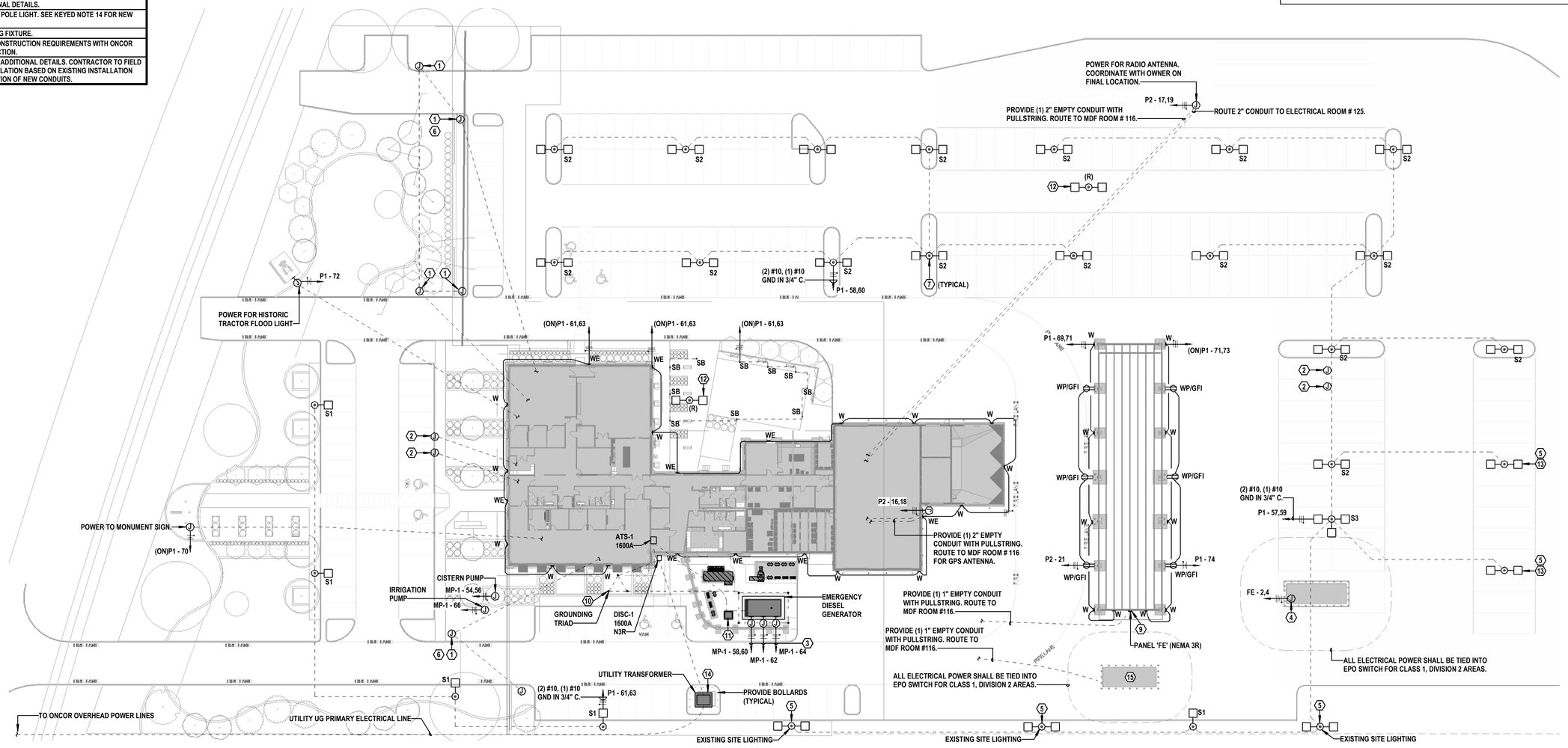

01 ELECTRICAL OVERALL SITE PLAN

SCALE: 1/32" = 1'-0"

Texas Department of Transportation

COPYRIGHT © 2021

DFW Consulting Group, Inc.
1616 Corporate Court, Suite 100
Irving, Tx 75038
(972) 929-1199
www.dfwcgi.com
Project No. :2004
Firm Registration No. :720

STATE OF TEXAS
JOHN HALEY
112905
LICENSED
PROFESSIONAL ENGINEER
04/21/2021

DALLAS DISTRICT (18)
COLLIN COUNTY
McKinney Area Engineering and Maintenance Facility
2205 TX-5, McKinney, TX 75069
PROJECT NO. 18-470420012

ISSUED: 2021.04.21
DRAWN BY: DFWCGI
REVISIONS:

ELECTRICAL OVERALL SITE PLAN

E1.2

THIS DRAWING CREATED FOR PRODUCTION ON 22"x34" SHEET SIZE. DO NOT SCALE PRINTS.

GENERAL NOTES - POWER

1	REFERENCE ARCHITECTURAL DRAWINGS FOR EXACT LOCATIONS & MOUNTING HEIGHTS OF ALL ELECTRICAL DEVICES.
2	REFERENCE IT CONSULTANT DRAWINGS FOR ADDITIONAL INFORMATION AND EXACT LOCATIONS OF DATA/PHONE-JACKS.
3	REFER TO E2.7 - OVERALL MEP POWER PLAN, E2.8 - MECHANICAL/PLUMBING POWER PLAN AREA A, AND E2.9 - MECHANICAL/PLUMBING POWER PLAN AREA B FOR MECHANICAL AND PLUMBING EQUIPMENT ELECTRICAL POWER PLANS.
4	ALL ADHESIVES, COVERINGS, INSULATION, JACKETS, MASTICS, PIPING, SEALERS, AND WIRING SHALL BE PLENUM RATED, HAVING A FLAME-SPREAD INDEX OF 25 OR LESS, AND SMOKE-DEVELOPED INDEX OF 50 OR LESS, AS REQUIRED BY CODE

KEYPLAN

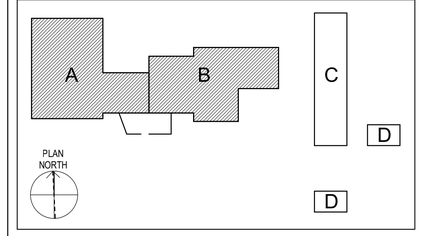

SCALES

3/32" = 1'-0"

16' 8' 0' 8' 16' 24'

01 OVERALL ELECTRICAL POWER PLAN

SCALE: 3/32" = 1'-0"

Texas Department of Transportation

COPYRIGHT © 2021

DFW Consulting Group, Inc.
1616 Corporate Court, Suite 100
Irving, Tx 75038
(972) 929-1199
www.dfwcgi.com
Project No. .2004
Firm Registration No. :720

STATE OF TEXAS
JOHN HALEY
112905
LICENSED
PROFESSIONAL ENGINEER
04/21/2021

DALLAS DISTRICT (18)
COLLIN COUNTY
McKinney Area Engineering and Maintenance Facility
2205 TX-5, McKinney, TX 75069
PROJECT NO. 18-470420012

ISSUED: 2021.04.21
DRAWN BY: DFWCGI
REVISIONS:

OVERALL ELECTRICAL POWER PLAN

E2.1

THIS DRAWING CREATED FOR PRODUCTION ON 22"x34" SHEET SIZE DO NOT SCALE PRINTS.

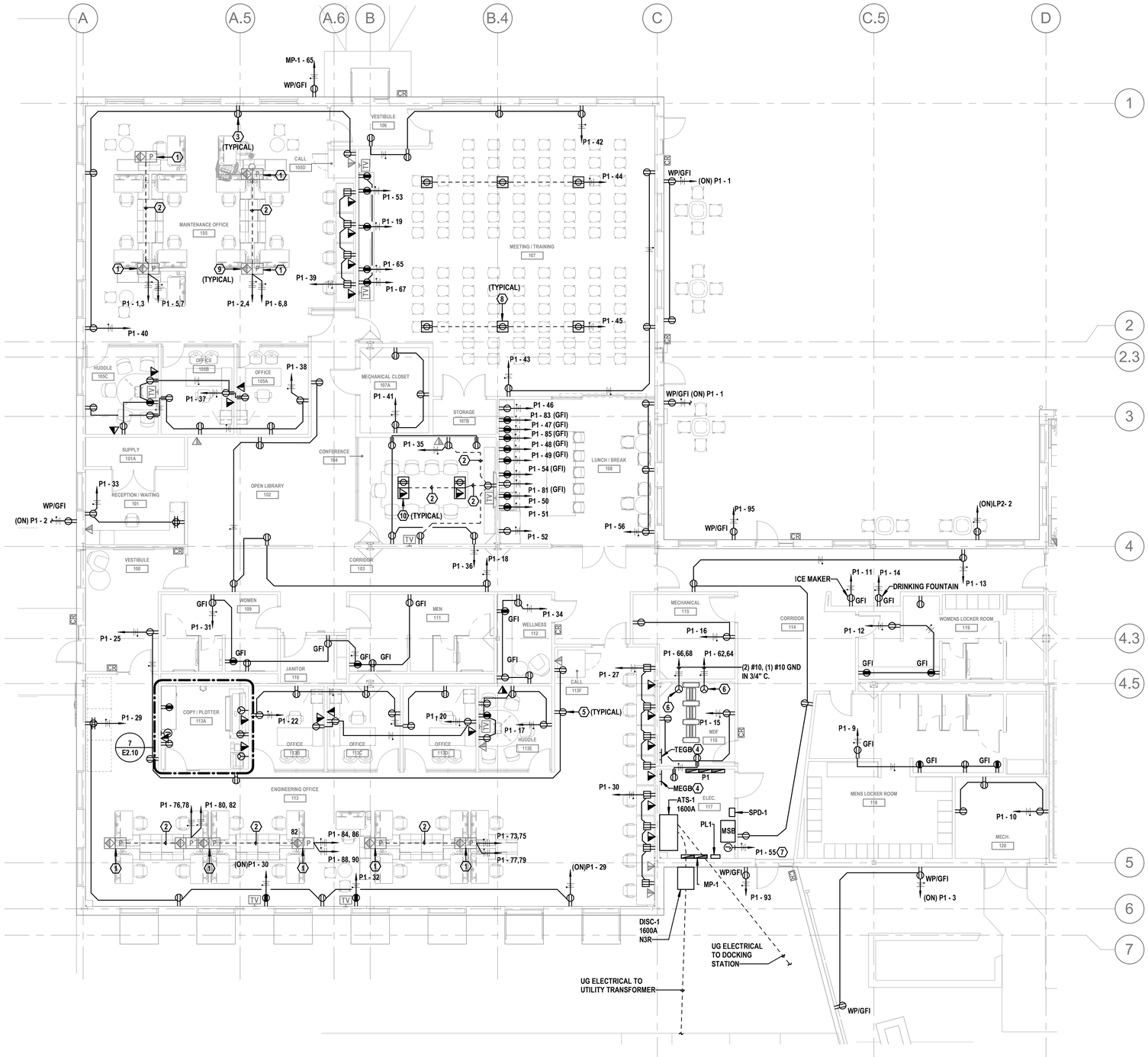

01 ELECTRICAL POWER PLAN AREA A

SCALE: 1/8" = 1'-0"

KEYPLAN

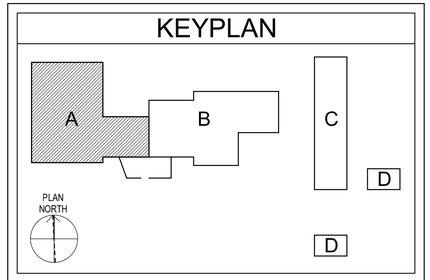

SCALES

1/8" = 1'-0"

8' 6' 4' 2' 0' 4' 8' 16'

GENERAL NOTES - POWER

1	REFERENCE ARCHITECTURAL DRAWINGS FOR EXACT LOCATIONS & MOUNTING HEIGHTS OF ALL ELECTRICAL DEVICES.
2	REFERENCE IT CONSULTANT DRAWINGS FOR ADDITIONAL INFORMATION AND EXACT LOCATIONS OF DATA/PHONE-JACKS.
3	REFER TO E2.7 - OVERALL MEP POWER PLAN, E2.8 - MECHANICAL/PLUMBING POWER PLAN AREA A, AND E2.9 - MECHANICAL/PLUMBING POWER PLAN AREA B FOR MECHANICAL AND PLUMBING EQUIPMENT ELECTRICAL POWER PLANS.
4	ALL ADHESIVES, COVERINGS, INSULATION, JACKETS, MASTICS, PIPING, SEALERS, AND WIRING SHALL BE PLENUM RATED, HAVING A FLAME-SPREAD INDEX OF 25 OR LESS, AND SMOKE-DEVELOPED INDEX OF 50 OR LESS, AS REQUIRED BY CODE

KEYED NOTES BY SYMBOL "⬡"

1	FLOOR BOX FOR FURNITURE SYSTEM. CONFIRM EXACT ELECTRICAL & WIRING REQUIREMENTS OF FURNITURE WITH EQUIPMENT FURNISHED. PROVIDE SHOP DRAWING WITH FLOOR BOX LOCATIONS WITH FURNITURE SUBMITTAL FOR APPROVAL.
2	PROVIDE (1) 1" CONDUIT FOR POWER AND (1) 2" CONDUIT FOR DATA.
3	GENERAL RECEPTACLE. REFER TO DETAILS 01/E5.1 AND 05/E5.1.
4	GROUND BAR. REFER TO 05/E5.1 FOR TYPICAL ISOLATED GROUND BUS DETAILS.
5	REFER TO 06/E5.1 FOR TYPICAL DEVICE MOUNTING HEIGHTS.
6	CONFIRM NEMA CONFIGURATION WITH IT CONSULTANT.
7	JUNCTION BOX FOR POWER TO IRRIGATION CONTROLLER. COORDINATE LOCATION WITH LANDSCAPE CONSULTANT.
8	PROVIDE LEGRAND MODEL 885B SINGLE SERVICE FLOOR BOX OR APPROVED EQUAL. COORDINATE FINISH WITH ARCHITECT PRIOR TO ROUGH-IN.
9	PROVIDE LEGRAND MODEL EFBFF WIREMOLD OR APPROVED EQUAL. COORDINATE FINISH WITH ARCHITECT PRIOR TO ROUGH-IN.
10	PROVIDE LEGRAND MODEL 880CS2-1 WIREMOLD OR APPROVED EQUAL. COORDINATE FINISH WITH ARCHITECT PRIOR TO ROUGH-IN.

BREAKROOM NOTES - EQUIPMENT SCHEDULE

CIRCUIT NUMBER	DESCRIPTION
P1-46	REFRIGERATOR
P1-47	MICROWAVE
P1-48	MICROWAVE
P1-49	COFFEE MAKER
P1-50	MICROWAVE
P1-51	MICROWAVE
P1-52	REFRIGERATOR
P1-54	ABOVE COUNTER RECEPTACLE
P1-79	DISHWASHER
P1-81	ICE-MAKER
P1-83	ICE-MAKER

Texas Department of Transportation

COPYRIGHT © 2021

DFW Consulting Group, Inc.
1616 Corporate Court, Suite 100
Irving, Tx 75038
(972) 929-1199
www.dfwcgi.com
Project No. .2004
Firm Registration No. .720

STATE OF TEXAS
JOHN HALEY
112905
LICENSED
PROFESSIONAL ENGINEER
04/21/2021

DALLAS DISTRICT (18)
COLLIN COUNTY
McKinney Area Engineering and Maintenance Facility
2205 TX-5, McKinney, TX 75069
PROJECT NO. 18-470420012

ISSUED: 2021.04.21
DRAWN BY: DFWCGI
REVISIONS:

ELECTRICAL POWER PLAN AREA A

E2.2

THIS DRAWING CREATED FOR PRODUCTION ON 22"x34" SHEET SIZE. DO NOT SCALE PRINTS.

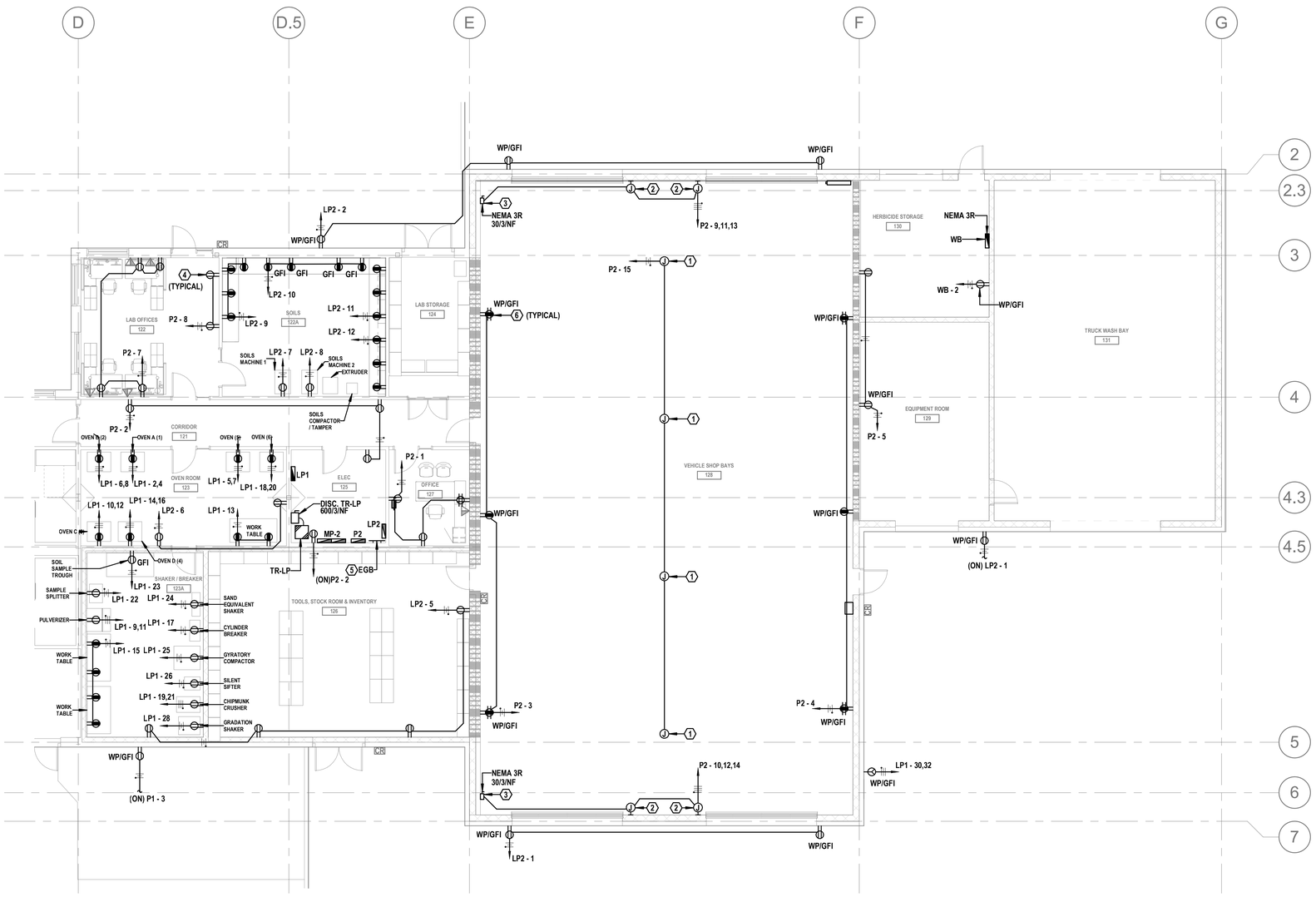

01 ELECTRICAL POWER PLAN AREA B

SCALE: 1/8" = 1'-0"

KEYPLAN

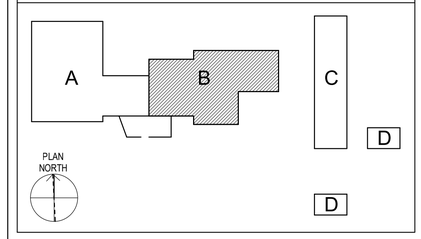

SCALES

1/8" = 1'-0"

8' 6' 4' 2' 0' 4' 8' 16'

GENERAL NOTES - POWER

1	REFERENCE ARCHITECTURAL DRAWINGS FOR EXACT LOCATIONS & MOUNTING HEIGHTS OF ALL ELECTRICAL DEVICES.
2	REFERENCE IT CONSULTANT DRAWINGS FOR ADDITIONAL INFORMATION AND EXACT LOCATIONS OF DATA/PHONE-JACKS.
3	REFER TO E2.7 - OVERALL MEP POWER PLAN, E2.8 - MECHANICAL/PLUMBING POWER PLAN AREA A, AND E2.9 - MECHANICAL/PLUMBING POWER PLAN AREA B FOR MECHANICAL AND PLUMBING EQUIPMENT ELECTRICAL POWER PLANS.
4	ALL ADHESIVES, COVERINGS, INSULATION, JACKETS, MASTICS, PIPING, SEALERS, AND WIRING SHALL BE PLENUM RATED, HAVING A FLAME-SPREAD INDEX OF 25 OR LESS, AND SMOKE-DEVELOPED INDEX OF 50 OR LESS, AS REQUIRED BY CODE

KEYED NOTES BY SYMBOL "⬡"

1	CEILING MOUNTED JUNCTION BOX FOR DUPLEX RECEPTACLE. PROVIDE (1) NEMA 5-20R 20A LOCKING TYPE RECEPTACLE FOR POWER REEL. COORDINATE EXACT LOCATION WITH ARCHITECT PRIOR TO ROUGH-IN.
2	JUNCTION BOX FOR ROLLUP DOOR POWER.
3	DISCONNECT SWITCH FOR ROLLUP DOOR. COORDINATE EXACT MOUNTING HEIGHT AND LOCATION WITH ARCHITECT PRIOR TO ROUGH-IN.
4	GENERAL RECEPTACLE. REFER TO DETAILS 01/E5.1 AND 05/E5.1.
5	GROUND BAR. REFER TO 05/E5.1 FOR TYPICAL ISOLATED GROUND BUS DETAILS.
6	REFER TO 06/E5.1 FOR TYPICAL DEVICE MOUNTING HEIGHTS.

Texas Department of Transportation

COPYRIGHT © 2021

DFW Consulting Group, Inc.
1616 Corporate Court, Suite 100
Irving, Tx 75038
(972) 929-1199
www.dfwcgi.com
Project No. :2004
Firm Registration No. :720

STATE OF TEXAS
JOHN HALEY
112905
LICENSED
PROFESSIONAL ENGINEER
04/21/2021

DALLAS DISTRICT (18)
COLLIN COUNTY

McKinney Area Engineering and Maintenance Facility

2205 TX-5, McKinney, TX 75069

PROJECT NO. 18-470420012

ISSUED: 2021.04.21
DRAWN BY: DFWCGI
REVISIONS:

ELECTRICAL POWER PLAN AREA B

E2.3

THIS DRAWING CREATED FOR PRODUCTION ON 22"x34" SHEET SIZE. DO NOT SCALE PRINTS.

GENERAL NOTES - MEP POWER

1	ALL ADHESIVES, COVERINGS, INSULATION, JACKETS, MASTICS, PIPING, SEALERS, AND WIRING SHALL BE PLENUM RATED, HAVING A FLAME-SPREAD INDEX OF 25 OR LESS, AND SMOKE-DEVELOPED INDEX OF 50 OR LESS, AS REQUIRED BY CODE.

KEYPLAN

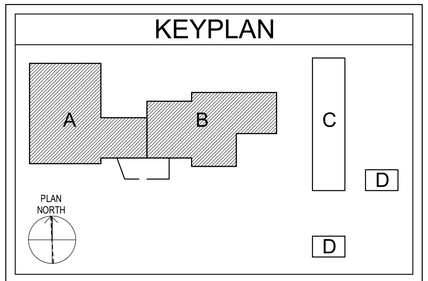

SCALES

3/32" = 1'-0"

16' 8' 0' 8' 16' 24'

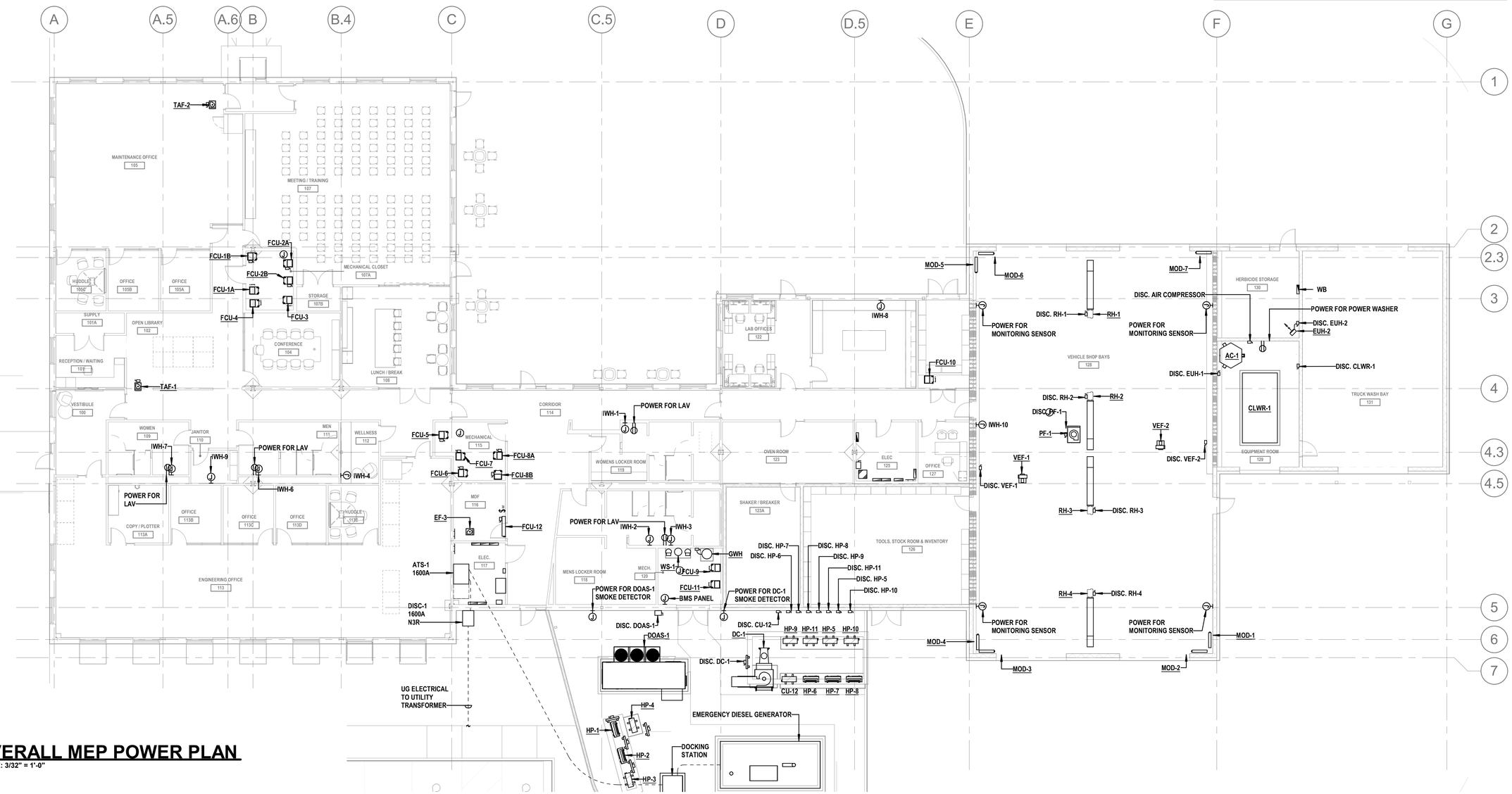

01 OVERALL MEP POWER PLAN

SCALE: 3/32" = 1'-0"

Texas Department of Transportation

COPYRIGHT © 2021

DFW Consulting Group, Inc.
1616 Corporate Court, Suite 100
Irving, Tx 75038
(972) 929-1199
www.dfwcgi.com
Project No. :2004
Firm Registration No. :720

STATE OF TEXAS
JOHN HALEY
112905
LICENSED
PROFESSIONAL ENGINEER
04/21/2021

DALLAS DISTRICT (18)
COLLIN COUNTY
McKinney Area Engineering and Maintenance Facility
2205 TX-5, McKinney, TX 75069
PROJECT NO. 18-470420012

ISSUED: 2021.04.21
DRAWN BY: DFWCGI
REVISIONS:

OVERALL MEP POWER PLAN

E2.4

THIS DRAWING CREATED FOR PRODUCTION ON 22"x34" SHEET SIZE DO NOT SCALE PRINTS.

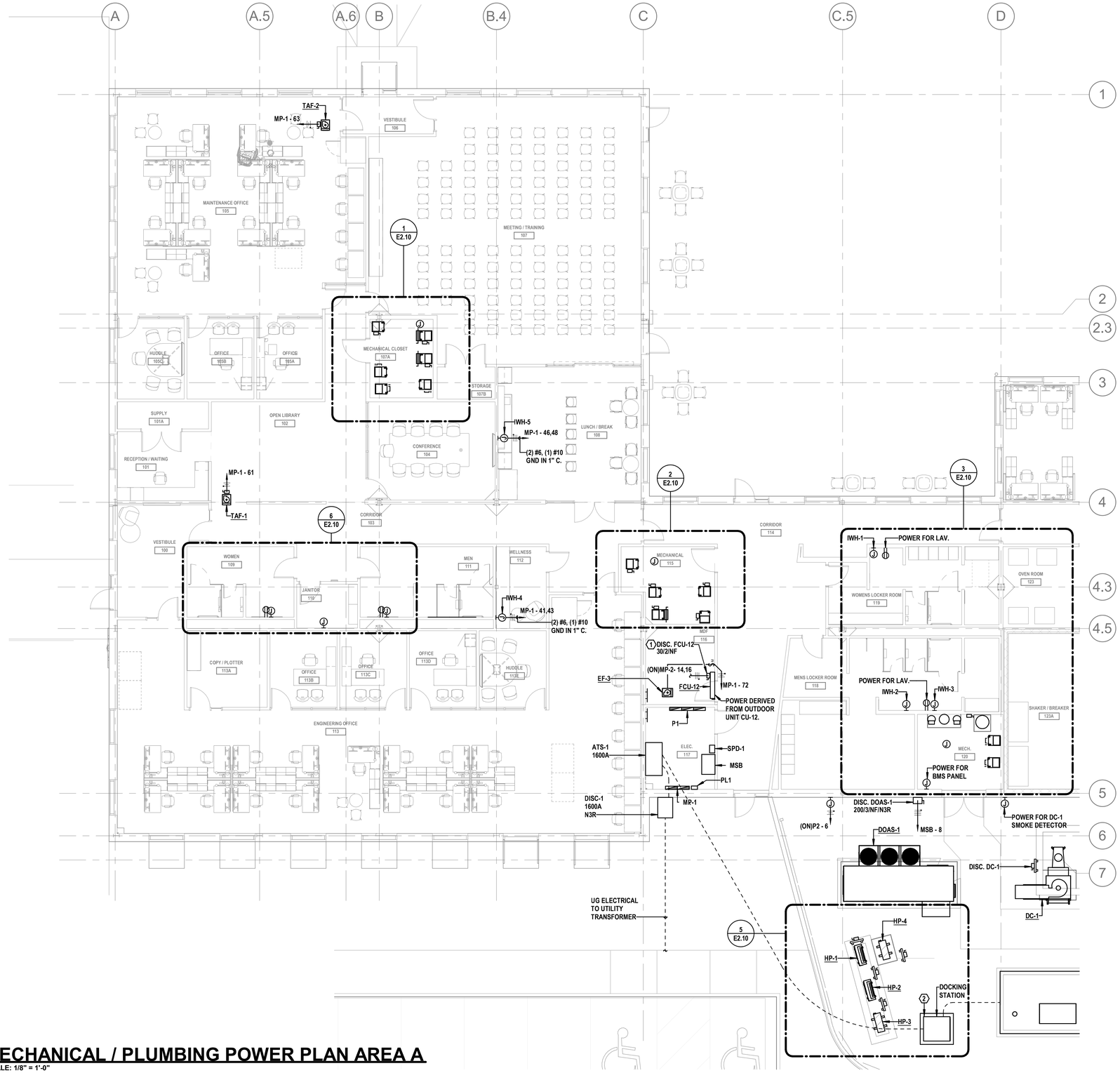

01 MECHANICAL / PLUMBING POWER PLAN AREA A

SCALE: 1/8" = 1'-0"

KEYPLAN

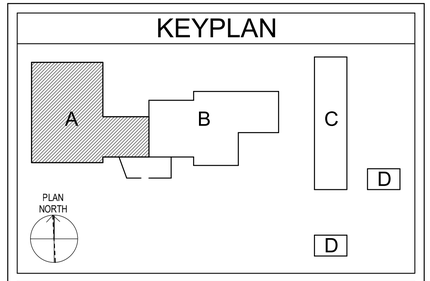

SCALES

1/8" = 1'-0"

8' 6' 4' 2' 0' 4' 8' 16'

GENERAL NOTES - MEP POWER

1	ALL ADHESIVES, COVERINGS, INSULATION, JACKETS, MASTICS, PIPING, SEALERS, AND WIRING SHALL BE PLENUM RATED, HAVING A FLAME-SPREAD INDEX OF 25 OR LESS, AND SMOKE-DEVELOPED INDEX OF 50 OR LESS, AS REQUIRED BY CODE.

KEYED NOTES BY SYMBOL "⬡"

1	PROVIDE NEW DISCONNECT. FIELD COORDINATE EXACT LOCATION. DISCONNECT SHALL NOT BE MOUNTED TO FAN COIL UNIT.
2	PROVIDE DUAL PURPOSE DOCKING/LOAD-BANK STATION. REFER TO 01/E3.1 FOR ADDITIONAL DETAILS.

Texas Department of Transportation

COPYRIGHT © 2021

DFW Consulting Group, Inc.
1616 Corporate Court, Suite 100
Irving, Tx 75038
(972) 929-1199
www.dfwcgi.com
Project No. :2004
Firm Registration No. :720

STATE OF TEXAS
JOHN HALEY
112905
LICENSED
PROFESSIONAL ENGINEER
04/21/2021

DALLAS DISTRICT (18)
COLLIN COUNTY

McKinney Area Engineering and Maintenance Facility

2205 TX-5, McKinney, TX 75069

PROJECT NO. 18-470420012

ISSUED: 2021.04.21

DRAWN BY: DFWCGI

REVISIONS:

MECHANICAL / PLUMBING POWER PLAN AREA A

E2.5

THIS DRAWING CREATED FOR PRODUCTION ON 22"x34" SHEET SIZE. DO NOT SCALE PRINTS.

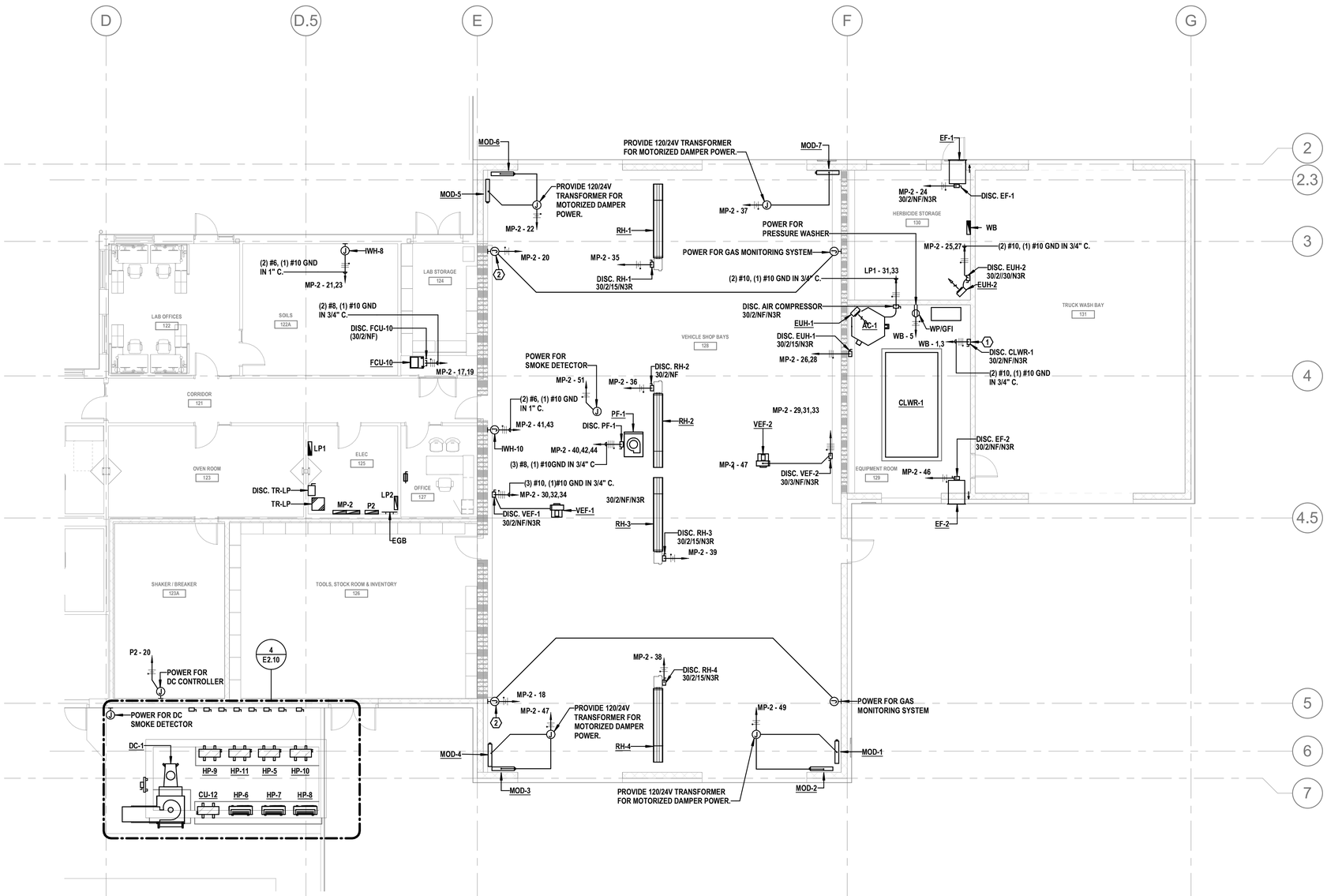

01 MECHANICAL / PLUMBING POWER PLAN AREA B

SCALE: 1/8" = 1'-0"

KEYPLAN

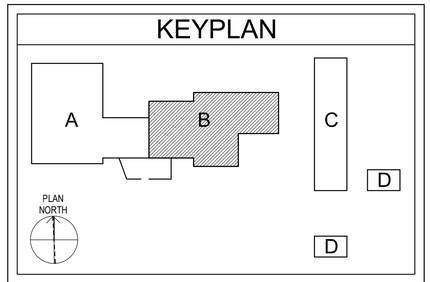

SCALES

1/8" = 1'-0"

8' 6' 4' 2' 0' 4' 8' 16'

GENERAL NOTES - MEP POWER

1. ALL ADHESIVES, COVERINGS, INSULATION, JACKETS, MASTICS, PIPING, SEALERS, AND WIRING SHALL BE PLENUM RATED, HAVING A FLAME-SPREAD INDEX OF 25 OR LESS, AND SMOKE-DEVELOPED INDEX OF 50 OR LESS, AS REQUIRED BY CODE.

KEYED NOTES BY SYMBOL "⬡"

1. DISCONNECT SWITCH FOR RECYCLE SYSTEM. MOUNT AT 66" A.F.F. COORDINATE EXACT MOUNTING LOCATION WITH ARCHITECT PRIOR TO ROUGH-IN.
2. POWER FOR TOXIC & COMBUSTIBLE GAS MONITORING SENSORS. PROVIDE 120/24V TRANSFORMER FOR POWER. COORDINATE EXACT MOUNTING LOCATION WITH ARCHITECT PRIOR TO ROUGH-IN. REFER TO 01/M2.3 FOR ADDITIONAL DETAILS.

Texas Department of Transportation
COPYRIGHT © 2021

DFW Consulting Group, Inc.
1616 Corporate Court, Suite 100
Irving, Tx 75038
(972) 929-1199
www.dfwcgi.com
Project No. .2004
Firm Registration No. :720

STATE OF TEXAS
JOHN HALEY
112905
LICENSED
PROFESSIONAL ENGINEER
04/21/2021

DALLAS DISTRICT (18)
COLLIN COUNTY
McKinney Area Engineering and Maintenance Facility
2205 TX-5, McKinney, TX 75069
PROJECT NO. 18-470420012

ISSUED: 2021.04.21
DRAWN BY: DFWCGI
REVISIONS:

MECHANICAL / PLUMBING POWER PLAN AREA B

E2.6

THIS DRAWING CREATED FOR PRODUCTION ON 22"x34" SHEET SIZE DO NOT SCALE PRINTS.

GENERAL NOTES - LIGHTING

1	REFERENCE ARCHITECTURAL DRAWINGS FOR EXACT LOCATIONS & MOUNTING HEIGHTS OF ALL ELECTRICAL DEVICES.
2	REFER TO LIGHTING CONTROL DRAWINGS ON SHEETS E5.2 THRU E5.4 FOR ADDITIONAL INFORMATION.
3	ALL ADHESIVES, COVERINGS, INSULATION, JACKETS, MASTICS, PIPING, SEALERS, AND WIRING SHALL BE PLENUM RATED, HAVING A FLAME-SPREAD INDEX OF 25 OR LESS, AND SMOKE-DEVELOPED INDEX OF 50 OR LESS, AS REQUIRED BY CODE.

KEYPLAN

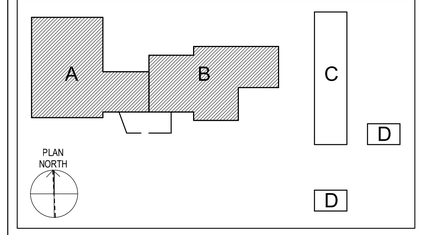

SCALES

3/32" = 1'-0"

16' 8' 0' 8' 16' 24'

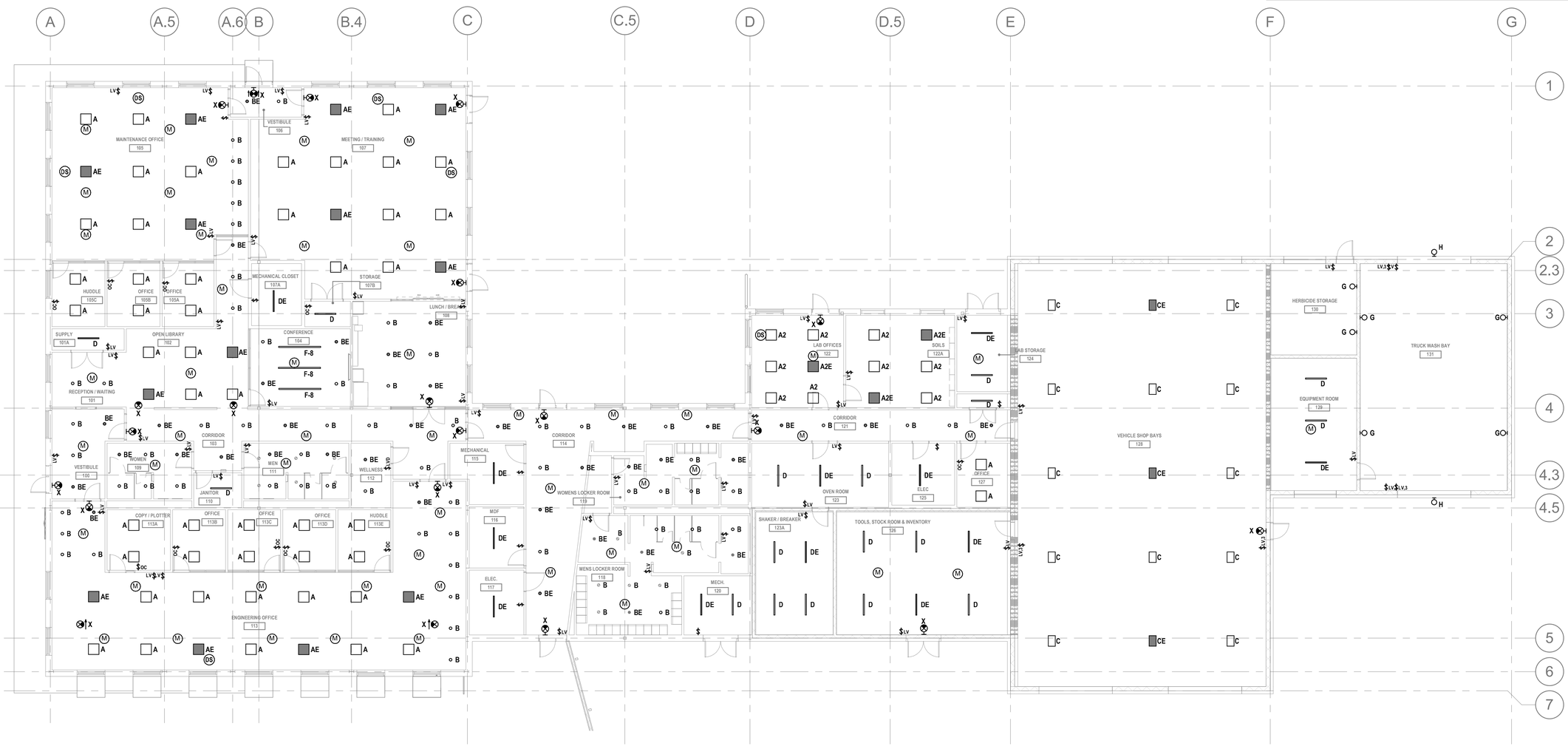

01 LIGHTING PLAN OVERALL

SCALE: 3/32" = 1'-0"

Texas Department of Transportation

COPYRIGHT © 2021

DFW Consulting Group, Inc.
1616 Corporate Court, Suite 100
Irving, Tx 75038
(972) 929-1199
www.dfwcgi.com
Project No. :2004
Firm Registration No. :720

STATE OF TEXAS
JOHN HALEY
112905
LICENSED
PROFESSIONAL ENGINEER
04/21/2021

DALLAS DISTRICT (18)
COLLIN COUNTY
McKinney Area Engineering and Maintenance Facility
2205 TX-5, McKinney, TX 75069
PROJECT NO. 18-470420012

ISSUED: 2021.04.21
DRAWN BY: DFWCGI
REVISIONS:

LIGHTING PLAN OVERALL

E2.7

THIS DRAWING CREATED FOR PRODUCTION ON 22"x34" SHEET SIZE. DO NOT SCALE PRINTS.

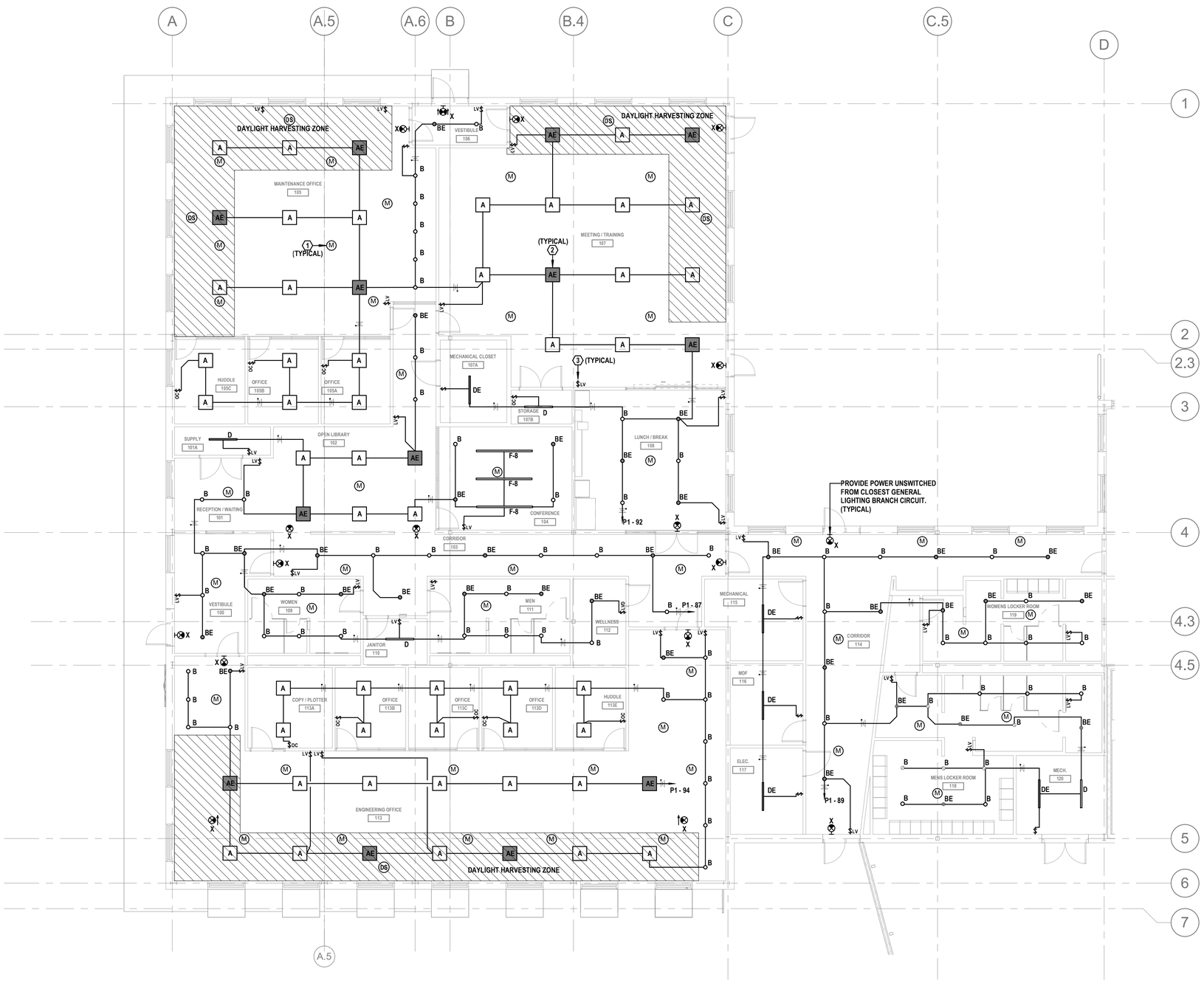

01 LIGHTING PLAN AREA A

SCALE: 1/8" = 1'-0"

KEYPLAN

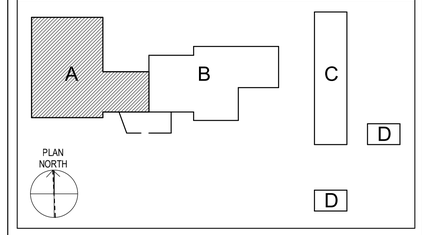

SCALES

1/8" = 1'-0"

8' 6' 4' 2' 0' 4' 8' 16'

GENERAL NOTES - LIGHTING

1	REFERENCE ARCHITECTURAL DRAWINGS FOR EXACT LOCATIONS & MOUNTING HEIGHTS OF ALL ELECTRICAL DEVICES.
2	REFER TO LIGHTING CONTROL DRAWINGS ON SHEETS E5.2 THRU E5.4 FOR ADDITIONAL INFORMATION.
3	ALL ADHESIVES, COVERINGS, INSULATION, JACKETS, MASTICS, PIPING, SEALERS, AND WIRING SHALL BE PLENUM RATED, HAVING A FLAME-SPREAD INDEX OF 25 OR LESS, AND SMOKE-DEVELOPED INDEX OF 50 OR LESS, AS REQUIRED BY CODE.

KEYED NOTES BY SYMBOL "⬡"

1	REFER TO 01/E5.2 FOR THE INTERIOR LIGHTING CONTROLS WIRING. REFER TO 01/E5.4 FOR THE LIGHTING CONTROLS RISER DIAGRAM.
2	SWITCHED EMERGENCY FIXTURE. REFER TO 02/E5.1 FOR SWITCHED EMERGENCY DRIVER DETAILS.
3	REFER TO 06/E5.1 FOR TYPICAL DEVICE MOUNTING HEIGHTS.

Texas Department of Transportation

COPYRIGHT © 2021

DFW Consulting Group, Inc.
1616 Corporate Court, Suite 100
Irving, Tx 75038
(972) 929-1199
www.dfwcgi.com
Project No. :2004
Firm Registration No. :720

STATE OF TEXAS
JOHN HALEY
112905
LICENSED
PROFESSIONAL ENGINEER
04/21/2021

DALLAS DISTRICT (18)
COLLIN COUNTY
McKinney Area Engineering and Maintenance Facility
2205 TX-5, McKinney, TX 75069
PROJECT NO. 18-470420012

ISSUED: 2021.04.21
DRAWN BY: DFWCGI
REVISIONS:

LIGHTING PLAN AREA A

E2.8

THIS DRAWING CREATED FOR PRODUCTION ON 22"x34" SHEET SIZE. DO NOT SCALE PRINTS.

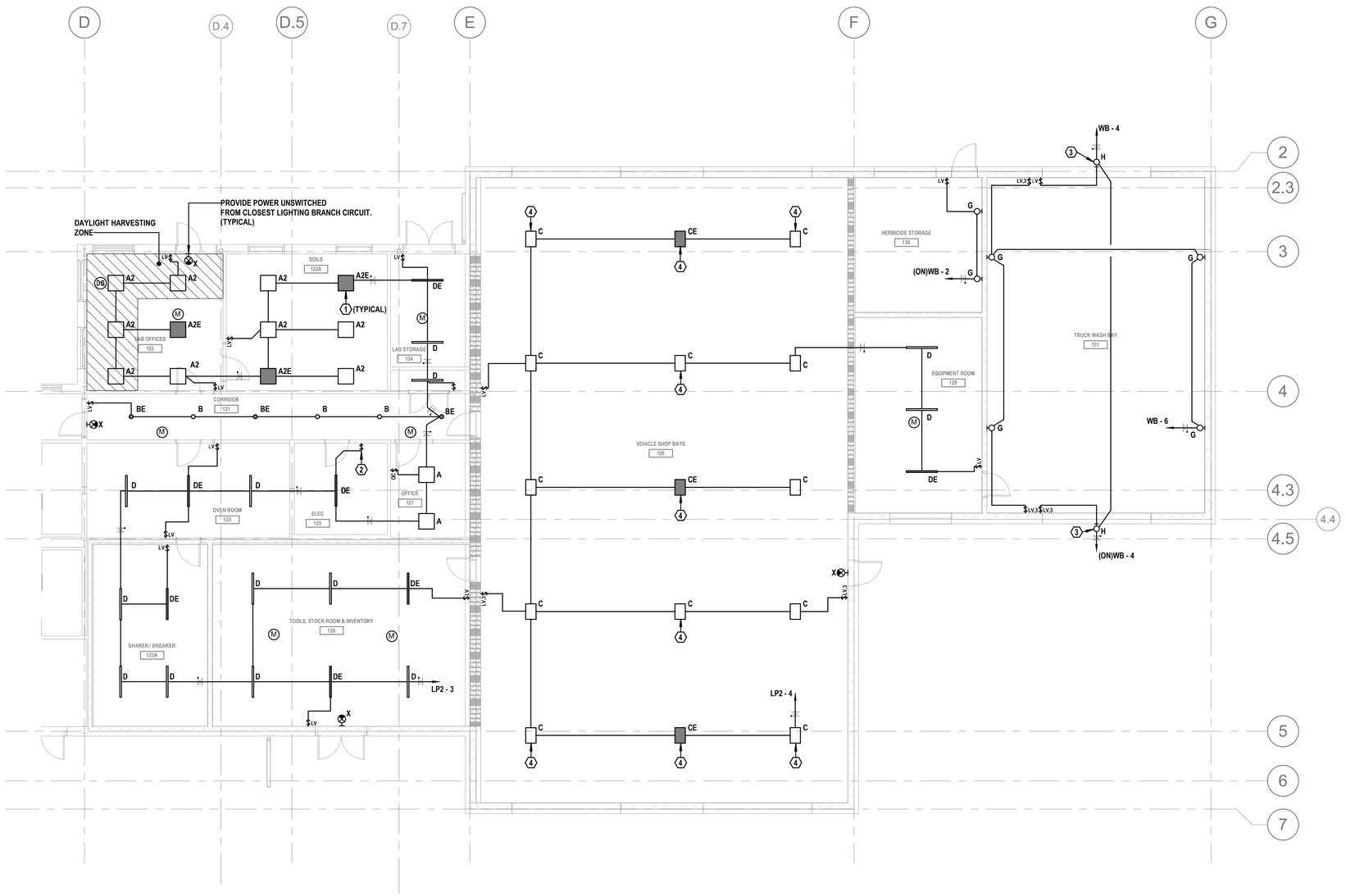

01 LIGHTING PLAN AREA B

SCALE: 1/8" = 1'-0"

KEYPLAN

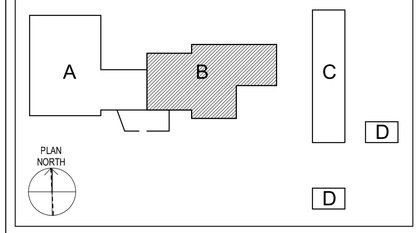

SCALES

1/8" = 1'-0"

8' 6' 4' 2' 0' 4' 8' 16'

GENERAL NOTES - LIGHTING

1	REFERENCE ARCHITECTURAL DRAWINGS FOR EXACT LOCATIONS & MOUNTING HEIGHTS OF ALL ELECTRICAL DEVICES.
2	REFER TO LIGHTING CONTROL DRAWINGS ON SHEETS E5.2 THRU E5.4 FOR ADDITIONAL INFORMATION.
3	ALL ADHESIVES, COVERINGS, INSULATION, JACKETS, MASTICS, PIPING, SEALERS, AND WIRING SHALL BE PLENUM RATED, HAVING A FLAME-SPREAD INDEX OF 25 OR LESS, AND SMOKE-DEVELOPED INDEX OF 50 OR LESS, AS REQUIRED BY CODE.

KEYED NOTES BY SYMBOL "⬡"

1	SWITCHED EMERGENCY FIXTURE. REFER TO 02/E5.1 FOR SWITCHED EMERGENCY DRIVER DETAILS.
2	REFER TO 06/E5.1 FOR TYPICAL DEVICE MOUNTING HEIGHTS.
3	ROUTE CONDUIT ON THE INTERIOR OF THE BUILDING TO PANEL.
4	COORDINATE EXACT MOUNTING LOCATIONS IN FIELD WITH ARCHITECT, MECHANICAL, AND PLUMBING PRIOR TO ROUGH-IN.

Texas Department of Transportation

COPYRIGHT © 2021

DFW Consulting Group, Inc.
1616 Corporate Court, Suite 100
Irving, Tx 75038
(972) 929-1199
www.dfwcgi.com
Project No. .2004
Firm Registration No. :720

STATE OF TEXAS
JOHN HALEY
112905
LICENSED
PROFESSIONAL ENGINEER
04/21/2021

DALLAS DISTRICT (18)
COLLIN COUNTY

McKinney Area Engineering and Maintenance Facility

2205 TX-5, McKinney, TX 75069

PROJECT NO. 18-470420012

ISSUED: 2021.04.21
DRAWN BY: DFWCGI
REVISIONS:

LIGHTING PLAN AREA B

E2.9

THIS DRAWING CREATED FOR PRODUCTION ON 22"x34" SHEET SIZE. DO NOT SCALE PRINTS.

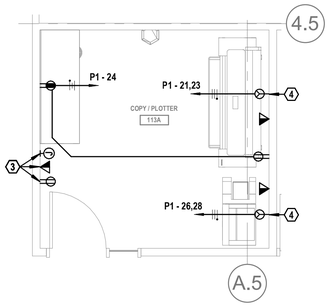

07 POWER PLAN AREA A - RM. 113A
SCALE: 1/4" = 1'-0"

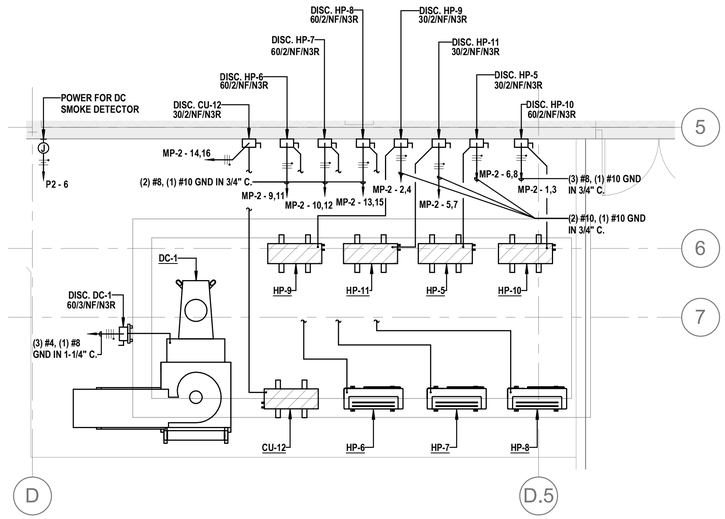

04 MECHANICAL POWER PLAN AREA B
SCALE: 1/4" = 1'-0"

GENERAL NOTES - MEP POWER

1	ALL ADHESIVES, COVERINGS, INSULATION, JACKETS, MASTICS, PIPING, SEALERS, AND WIRING SHALL BE PLENUM RATED, HAVING A FLAME-SPREAD INDEX OF 25 OR LESS, AND SMOKE-DEVELOPED INDEX OF 50 OR LESS, AS REQUIRED BY CODE.

KEYED NOTES BY SYMBOL "⬡"

1	PROVIDE NEW DISCONNECT. FIELD COORDINATE EXACT LOCATION. DISCONNECT SHALL NOT BE MOUNTED TO FAN COIL UNIT.
2	COORDINATE JBOX MOUNTING HEIGHT WITH LAVATORY APRON.
3	JUNCTION BOX, RECEPTACLE, AND DATA RECEPTACLE FOR POWER AND COMMUNICATIONS TO TANK MANAGEMENT CONSOLE. REFER TO 01/FS1.1 FOR ADDITIONAL DETAILS.
4	CONFIRM EXACT NEMA CONFIGURATION WITH EQUIPMENT MANUFACTURER PRIOR TO ROUGH-IN.

KEYPLAN

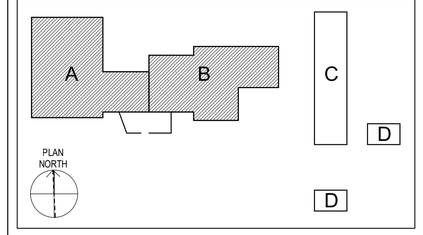

SCALES

1/4" = 1'-0"

4' 3' 2' 1' 0" 2' 4' 8'

Texas Department of Transportation
COPYRIGHT © 2021

DFW Consulting Group, Inc.
1616 Corporate Court, Suite 100
Irving, Tx 75038
(972) 929-1199
www.dfwcgi.com
Project No. .2004
Firm Registration No. .720

STATE OF TEXAS
JOHN HALEY
112905
LICENSED
PROFESSIONAL ENGINEER
04/21/2021

DALLAS DISTRICT (18)
COLLIN COUNTY
McKinney Area Engineering and Maintenance Facility
2205 TX-5, McKinney, TX 75069
PROJECT NO. 18-470420012

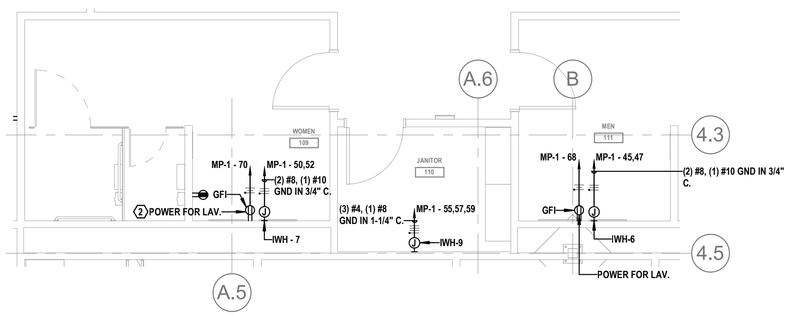

06 MECHANICAL / PLUMBING POWER PLAN RM. 109, 110 & 111
SCALE: 1/4" = 1'-0"

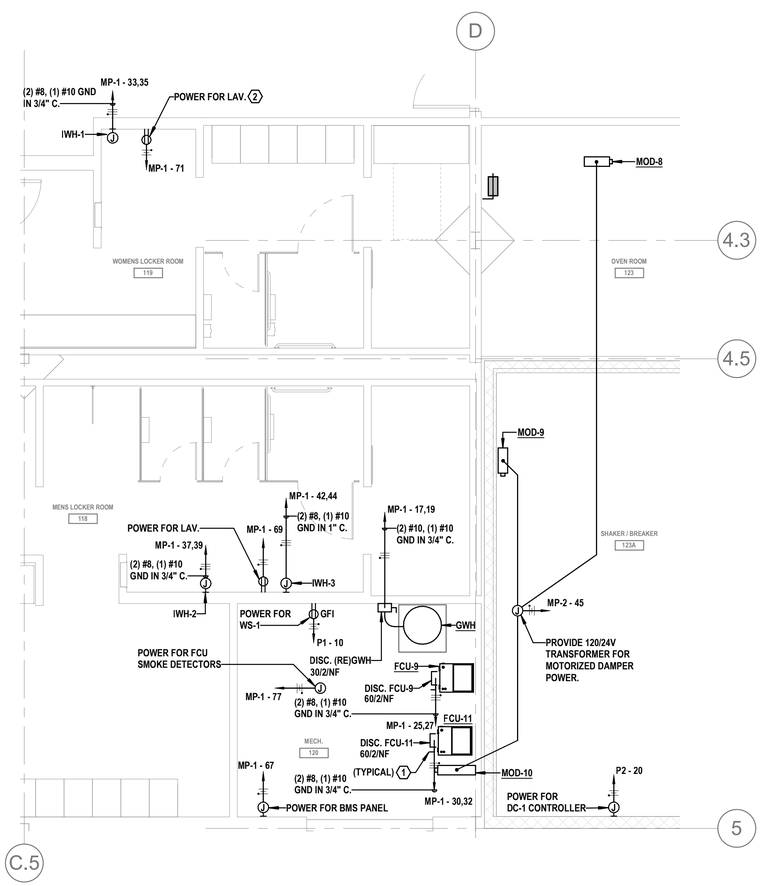

03 MECHANICAL / PLUMBING POWER PLAN RM. 118, 119 & 120
SCALE: 1/4" = 1'-0"

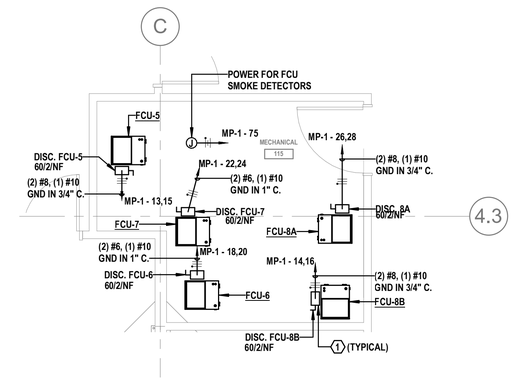

02 MECHANICAL POWER PLAN RM. 115
SCALE: 1/4" = 1'-0"

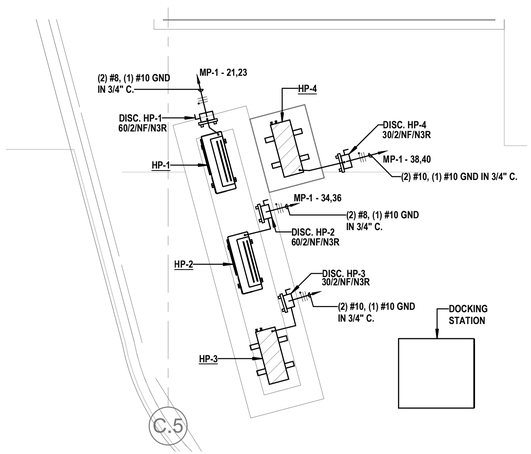

05 MECHANICAL POWER PLAN AREA A
SCALE: 1/4" = 1'-0"

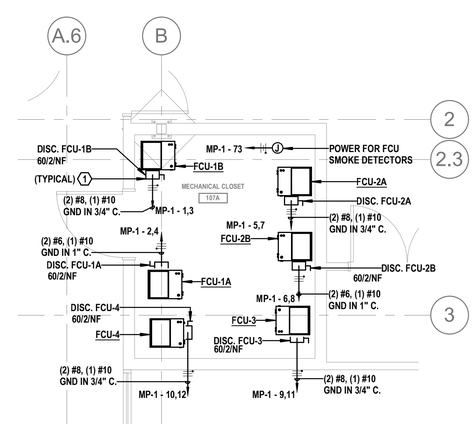

01 MECHANICAL POWER PLAN RM. 107A
SCALE: 1/4" = 1'-0"

ISSUED: 2021.04.21
DRAWN BY: DFWCGI
REVISIONS:

ENLARGED
ELECTRICAL
PLANS

E2.10

THIS DRAWING CREATED
FOR PRODUCTION ON
22"x34" SHEET SIZE.
DO NOT SCALE PRINTS.

COPPER FEEDER SCHEDULE

3 CONDUCTORS PLUS GROUND			COPPER CONDUCTORS WITH GROUND WIRE		4 CONDUCTORS PLUS GROUND		
CODE	WIRES	CONDUIT	AMP	DEG.	CONDUIT	WIRES	CODE
20	3 #12, 1 #12	3/4"	20	60	3/4"	4 #12, 1 #12	20N
30	3 #10, 1 #10	3/4"	30	60	3/4"	4 #10, 1 #10	30N
40	3 #8, 1 #10	3/4"	40	60	1"	4 #8, 1 #10	40N
50	3 #6, 1 #10	1"	55	60	1"	4 #6, 1 #10	50N
70	3 #4, 1 #8	1-1/4"	70	60	1-1/4"	4 #4, 1 #8	70N
80	3 #3, 1 #8	1-1/4"	85	60	1-1/4"	4 #3, 1 #8	80N
90	3 #2, 1 #8	1-1/4"	95	60	1-1/2"	4 #2, 1 #8	90N
100	3 #1, 1 #6	1-1/2"	110	60	2"	4 #1, 1 #6	100N
110	3 #2, 1 #6	1-1/4"	115	75	1-1/4"	4 #2, 1 #6	110N
125	3 #1, 1 #6	1-1/2"	130	75	2"	4 #1, 1 #6	125N
150	3 #1/0, 1 #6	1-1/2"	150	75	2"	4 #1/0, 1 #6	150N
175	3 #2/0, 1 #6	2"	175	75	2"	4 #2/0, 1 #6	175N
200	3 #3/0, 1 #6	2"	200	75	2-1/2"	4 #3/0, 1 #6	200N
225	3 #4/0, 1 #4	2"	230	75	2-1/2"	4 #4/0, 1 #4	225N
250	3 #250MCM, 1 #4	2-1/2"	255	75	3"	4 #250MCM, 1 #4	250N
300	3 #350MCM, 1 #3	3"	310	75	3"	4 #350MCM, 1 #3	300N
350	3 #500MCM, 1 #3	3"	380	75	4"	4 #500MCM, 1 #3	350N
400	(2)SETS #3/0, 1 #3	2"	400	75	2-1/2"	(2) SETS 4 #3/0, 1 #3	400N
600	(2)SETS 3 #350MCM, 1 #1	3"	620	75	3"	(2)SETS 4 #350MCM, 1 #1	600N
800	(2)SETS 3 #600MCM, 1 #1/0	4"	840	75	4"	(2)SETS 4 #600MCM, 1 #1/0	800N
1000	(3)SETS 3 #500MCM, 1 #2/0	4"	1140	75	4"	(3)SETS 4 #500MCM, 1 #2/0	1000N
1200	(3)SETS 3 #600MCM, 1 #3/0	4"	1260	75	4"	(3)SETS 4 #600MCM, 1 #3/0	1200N
1600	(4)SETS 3 #600MCM, 1 #4/0	4"	1680	75	4"	(4)SETS 4 #600MCM, 1 #4/0	1600N
2000	(5)SETS 3 #600MCM, 1 #250MCM	4"	2100	75	4"	(5)SETS 4 #600MCM, 1 #250MCM	2000N
2500	(6)SETS 3 #600MCM, 1 #350MCM	4"	2520	75	4"	(6)SETS 4 #600MCM, 1 #350MCM	2500N
3000	(8)SETS 3 #600MCM, 1 #400MCM	4"	3360	75	4"	(8)SETS 4 #600MCM, 1 #400MCM	3000N
4000	(10)SETS 3 #600MCM, 1 #500MCM	4"	4200	75	4"	(10)SETS 4 #600MCM, 1 #500MCM	4000N

ABOVE 100 AMPS, PROVIDE COMPRESSION LUGS

ABOVE 100 AMPS, PROVIDE COMPRESSION LUGS

NOTES:
1. FOR PARALLEL FEEDERS NOT LISTED REFER TO NEC TABLE 250.122 FOR GROUND WIRE SIZING.
2. RESIZE MOTOR CIRCUIT GROUND WIRES PER OVERCURRENT DEVICE AS SCHEDULED IN NEC TABLE 250.122.
3. ALL INTERIOR CONDUIT 2" OR SMALLER SHALL BE RUN IN STEEL (EMT) WITH COMPRESSION FITTINGS.
4. ALL CONDUIT LARGER THAN 2" SHALL BE RIGID, HOT-DIPPED, RIGID GALVANIZED STEEL (RGS) WITH THREADED CONNECTORS AND FITTINGS.
5. ALL CONDUIT ON BUILDING EXTERIOR SHALL BE RGS WITH THREADED CONNECTORS AND FITTINGS.

FAULT CURRENT CALCULATION

UTILITY TRANSFORMER = 750 KVA Z = 5.75

$$Isca = \frac{KVA \times 1000}{V \times \sqrt{3} \times Z}$$

$$Isca = \frac{750 \times 1000}{208 \times \sqrt{3} \times 0.0575} = 36{,}205\ A$$

AVAILABLE 3Ø FAULT = 36.2 KAIC @ DISC-1

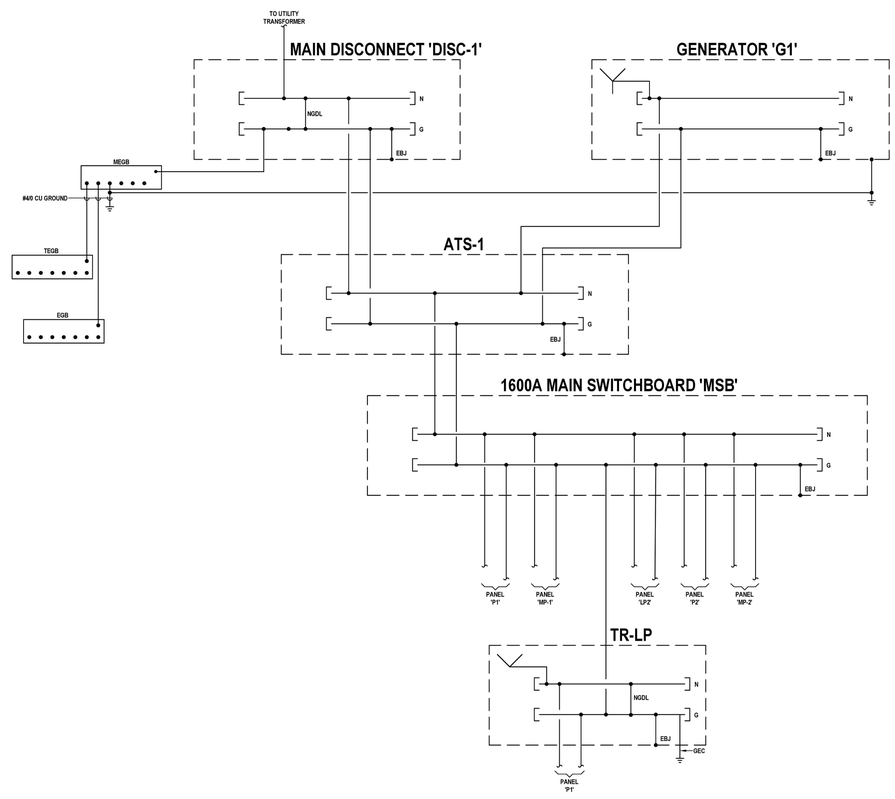

02 ELECTRICAL GROUNDING DIAGRAM
SCALE: NONE

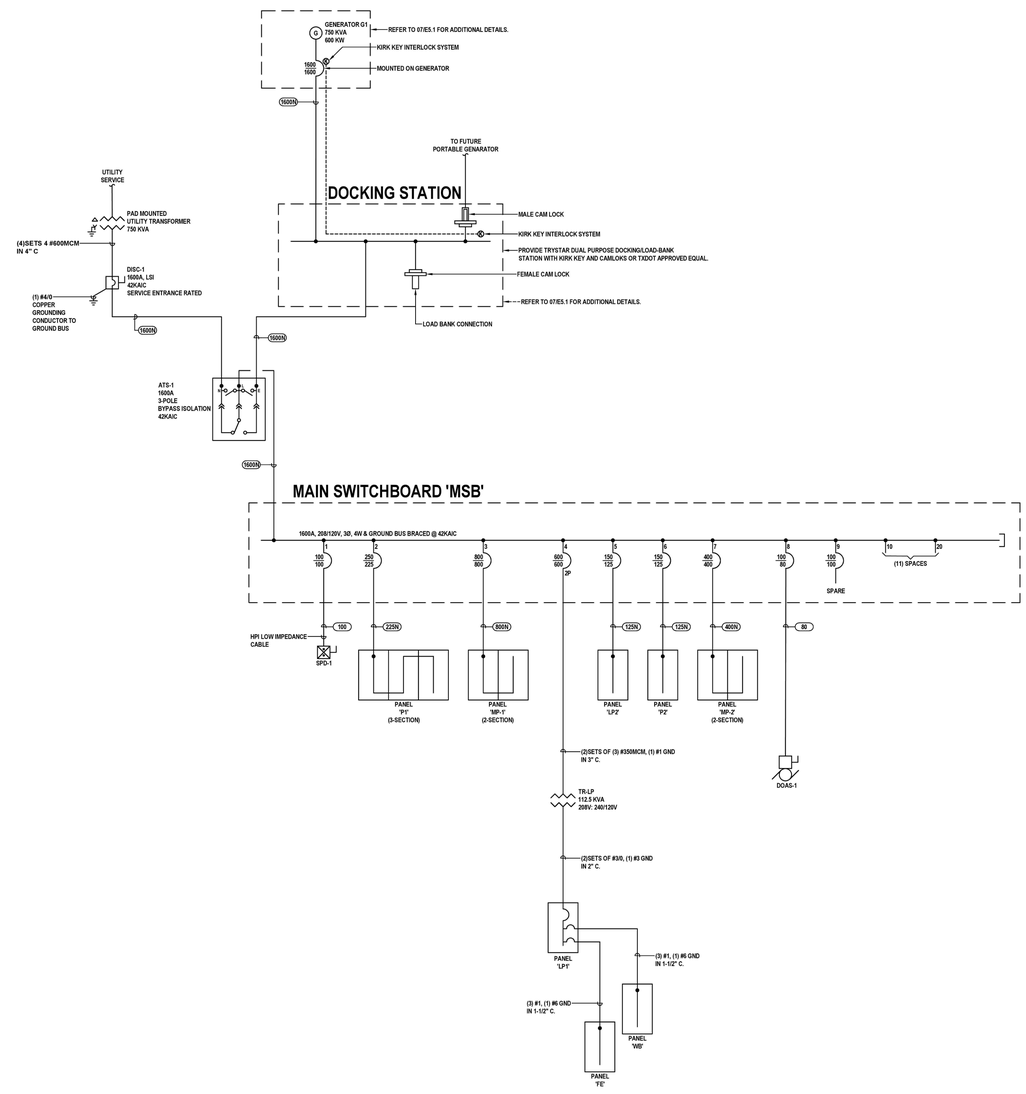

01 ELECTRICAL SINGLE LINE DIAGRAM
SCALE: NONE

Texas Department of Transportation

COPYRIGHT © 2021

DFW Consulting Group, Inc.
1616 Corporate Court, Suite 100
Irving, Tx 75038
(972) 929-1199
www.dfwcgi.com
Project No. .2004
Firm Registration No. .720

STATE OF TEXAS
JOHN HALEY
112905
LICENSED
PROFESSIONAL ENGINEER
04/21/2021

DALLAS DISTRICT (18)
COLLIN COUNTY
McKinney Area Engineering and Maintenance Facility
2205 TX-5, McKinney, TX 75069
PROJECT NO. 18-470420012

ISSUED: 2021.04.21
DRAWN BY: DFWCGI
REVISIONS:

ELECTRICAL SINGLE LINE DIAGRAM

E3.1

THIS DRAWING CREATED FOR PRODUCTION ON 22"x34" SHEET SIZE. DO NOT SCALE PRINTS.

Panel: LP1

CKT	Circuit Description	Trip	Poles	Load Classification	A		B		Load Classification	Poles	Trip	Circuit Description	CKT
1	PANEL 'WB'	100 A	2	Lighting; Motor;...	5010 VA	598 VA			Heating	2	20 A	OVEN A	2
3	--	--	--	--			3950 VA	598 VA	--	--	--	--	4
5	OVEN #5	20 A	2	Heating	1380 VA	1104 VA			Heating	2	20 A	OVEN B	6
7	--	--	--	--			1380 VA	1104 VA	--	--	--	--	8
9	PULVERIZER	20 A	2	Motor	920 VA	598 VA			Heating	2	20 A	OVEN C	10
11	--	--	--	--			920 VA	598 VA	--	--	--	--	12
13	RECEPTS RM. 123	20 A	1	Receptacles	360 VA	1380 VA			Heating	2	20 A	OVEN D	14
15	RECEPTS RM. 123A	20 A	1	Receptacles			720 VA	1380 VA	--	--	--	--	16
17	CYLINDER BREAKER	20 A	1	Motor	1800 VA	1560 VA			Heating	2	20 A	OVEN #6	18
19	CHIPMUNK CRUSHER	20 A	2	Motor			2016 VA	1560 VA	--	--	--	--	20
21	--	--	--	--	2016 VA	180 VA			Motor	1	20 A	SAMPLE SPLITTER	22
23	SOIL SAMPLE TROUGH	20 A	1	Receptacles			180 VA	528 VA	Motor	1	20 A	SAND EQUIVALENT SHAKER	24
25	GYRATORY COMPACTOR	20 A	1	Motor	1380 VA	1000 VA			Motor	1	20 A	SILENT SIFTER	26
27	PANEL 'FE'	100 A	2	Power			5200 VA	1000 VA	Motor	1	20 A	GRADATION SHAKER	28
29	--	--	--	--	5340 VA	500 VA			Receptacles	2	20 A	EXT. WP/GFI RECEPT	30
31	AIR COMPRESSOR	20 A	2	Motor			2064 VA	500 VA	--	--	--	--	32
33	--	--	--	--	2064 VA	750 VA			--	2	20 A	SPARE	34
35	SPARE	20 A	2	--			750 VA	750 VA	--	--	--	--	36
37	--	--	--	--	750 VA	750 VA			--	2	20 A	SPARE	38
39	SPARE	20 A	1	--			750 VA	750 VA	--	--	--	--	40
41	SPARE	20 A	1	--	750 VA	750 VA			--	1	20 A	SPARE	42
				Total Load:	30940 VA		26698 VA						
				Total Amps:	258 A		222 A						

Load Classification	Connected Load	Connected Current	Design Factor	Design Load	Design Current
Lighting	1400 VA	6 A	125.00%	1750 VA	7 A
Receptacles	2620 VA	11 A	100.00%	2620 VA	11 A
Data	0 VA	0 A	0.00%	0 VA	0 A
Motor	23088 VA	96 A	107.80%	24888 VA	104 A
Cooling	0 VA	0 A	0.00%	0 VA	0 A
Heating	13240 VA	55 A	80.00%	10592 VA	44 A
Kitchen	0 VA	0 A	0.00%	0 VA	0 A
Other	0 VA	0 A	0.00%	0 VA	0 A
Spare	9610 VA	40 A	50.00%	4805 VA	20 A
Totals:	57638 VA	240 A		50799 VA	212 A

Notes:
1. Contractor shall provide full size neutral and ground bus.
2. Contractor shall balance phases to within +/-10%.

Location:	ELEC 125
Supply From:	TR-LP
Mounting:	Surface
Enclosure:	Type 1

Summary	
Voltage:	120/240 Single
Phases	1
Wires:	3
Neutral:	100.00%
Ground Bus:	Yes
A.I.C. Rating:	42k
Mains Type:	MCB
Bus Rating:	400 A
Total Amps:	212 A

Additional Notes:
PROVIDE WITH FEED THRU LUGS.

Panel: LP2

CKT	Circuit Description	Trip	Poles	Load Classification	A		B		C		Load Classification	Poles	Trip	Circuit Description	CKT
1	RECEPTS EXT. WP/GFI	20 A	1	Receptacles	540 VA	720 VA					Receptacles	1	20 A	RECEPTS EXT. WP/GFI	2
3	LIGHTING	20 A	1	Lighting			1587 VA	1562 VA			Lighting	1	20 A	LIGHTING RM 128	4
5	RECEPTS RM. 123A & 126	20 A	1	Receptacles					720 VA	180 VA	Receptacles	1	20 A	RECEPTS RM. 123	6
7	SOILS MACHINE 1	20 A	1	Heating	3120 VA	3120 VA					Heating	1	20 A	SOILS MACHINE 2	8
9	RECEPTS CNTR RM 122A	20 A	1	Receptacles			720 VA	720 VA			Receptacles	1	20 A	RECEPTS CNTR RM 122A	10
11	RECEPTS CNTR RM 122A	20 A	1	Receptacles					540 VA	540 VA	Receptacles	1	20 A	RECEPTS CNTR RM 122A	12
13	SPARE	20 A	1	--	500 VA	500 VA					--	1	20 A	SPARE	14
15	SPARE	20 A	1	--			500 VA	500 VA			--	1	20 A	SPARE	16
17	SPARE	20 A	1	--					500 VA	500 VA	--	1	20 A	SPARE	18
19	SPARE	20 A	1	--	500 VA	500 VA					--	1	20 A	SPARE	20
21	SPARE	20 A	1	--			500 VA	500 VA			--	1	20 A	SPARE	22
23	SPARE	20 A	1	--					500 VA	500 VA	--	1	20 A	SPARE	24
25	SPARE	20 A	1	--	500 VA	500 VA					--	1	20 A	SPARE	26
27	SPARE	20 A	1	--			500 VA	500 VA			--	1	20 A	SPARE	28
29	SPARE	20 A	1	--					500 VA	500 VA	--	1	20 A	SPARE	30
31	SPARE	20 A	1	--	500 VA	500 VA					--	1	20 A	SPARE	32
33	SPACE ONLY	--	--	--			0 VA	0 VA			--	--	--	SPACE ONLY	34
35	SPACE ONLY	--	--	--					0 VA	0 VA	--	--	--	SPACE ONLY	36
37	SPACE ONLY	--	--	--	0 VA	0 VA					--	--	--	SPACE ONLY	38
39	SPACE ONLY	--	--	--			0 VA	0 VA			--	--	--	SPACE ONLY	40
41	SPACE ONLY	--	--	--					0 VA	0 VA	--	--	--	SPACE ONLY	42
				Total Load:	11500 VA		7589 VA		4980 VA						
				Total Amps:	99 A		67 A		42 A						

Load Classification	Connected Load	Connected Current	Design Factor	Design Load	Design Current
Lighting	3149 VA	9 A	125.00%	3937 VA	11 A
Receptacles	4680 VA	13 A	100.00%	4680 VA	13 A
Data	0 VA	0 A	0.00%	0 VA	0 A
Motor	0 VA	0 A	0.00%	0 VA	0 A
Cooling	0 VA	0 A	0.00%	0 VA	0 A
Heating	6240 VA	17 A	80.00%	4992 VA	14 A
Kitchen	0 VA	0 A	0.00%	0 VA	0 A
Other	0 VA	0 A	0.00%	0 VA	0 A
Spare	10000 VA	28 A	50.00%	5000 VA	14 A
Totals:	24069 VA	67 A		18609 VA	52 A

Notes:
1. Contractor shall provide full size neutral and ground bus.
2. Contractor shall balance phases to within +/-10%.

Location:	ELEC 125
Supply From:	MSB
Mounting:	Surface
Enclosure:	Type 1

Summary	
Voltage:	120/208 Wye
Phases	3
Wires:	4
Neutral:	100.00%
Ground Bus:	Yes
A.I.C. Rating:	42k
Mains Type:	MLO
Bus Rating:	125 A
Total Amps:	52 A

Additional Notes:
PROVIDE WITH FEED THRU LUGS AND INTERNAL SURGE PROTECTION DEVICE.

Distribution Panel: MSB

CKT	Circuit Description	Load Classification	Load
1	SPD	Other	36026 VA
2	P1	Lighting; Other; Kitchen; Receptacles; Data; Receptacle	72253 VA
3	MP-1	Other; Motor; Heating; Receptacles	202087 VA
4	TR-LP	Lighting; Motor; Heating; Receptacles; Power	57638 VA
5	LP2	Lighting; Heating; Receptacles	24069 VA
6	P2	Other; Motor; Receptacles	25240 VA
7	MP-2	Other; Motor; Heating	110881 VA
8	DOAS-1	Motor	25939 VA
9	SPARE	--	28821 VA
10	SPACE	--	0 VA
11	SPACE	--	0 VA
12	SPACE	--	0 VA
13	SPACE	--	0 VA
14	SPACE	--	0 VA
15	SPACE	--	0 VA
16	SPACE	--	0 VA
17	SPACE	--	0 VA
18	SPACE	--	0 VA
19	SPACE	--	0 VA
20	SPACE	--	0 VA

Load Classification	Connected Load (VA)	Connected Current	Design Factor	Design Load (VA)	Design Current
Lighting	15513 VA	43 A	125.00%	19391 VA	54 A
Receptacles	45300 VA	126 A	61.04%	27650 VA	77 A
Data	2000 VA	6 A	100.00%	2000 VA	6 A
Motor	81009 VA	225 A	108.01%	87494 VA	243 A
Cooling	0 VA	0 A	0.00%	0 VA	0 A
Heating	266686 VA	740 A	80.00%	213348 VA	592 A
Kitchen	14440 VA	40 A	80.00%	11552 VA	32 A
Other	54716 VA	152 A	100.00%	54716 VA	152 A
Spare	95431 VA	265 A	50.00%	47716 VA	132 A
Totals:	582955 VA	1618 A		470191 VA	1305 A

Notes:
1. Contractor shall provide full size neutral and ground bus.
2. Contractor shall balance phases to within +/-10%.

Location:	
Supply From:	UTILITY...
Mounting:	
Enclosure:	

Summary	
Voltage:	120/208 Wye
Phases:	3
Wires:	4
Neutral:	100.00%
Ground Bus:	Yes
A.I.C. Rating:	42k
Mains Type:	MCB
Bus Rating:	1600 A
Total Amps:	1305 A

Additional Notes:

Panel: FE

CKT	Circuit Description	Trip	Poles	Load Classification	A		B		Load Classification	Poles	Trip	Circuit Description	CKT
1	FUEL DISPENSERS	20 A	2	Power	1920 VA	1920 VA			Power	2	20 A	PROPANE STATION	2
3	--	--	--	--			1920 VA	1920 VA	--	--	--	--	4
5	ASSET WORKS (FMS)	20 A	1	--	500 VA	0 VA			--	--	--	SHUNT TRIP	6
7	DIESEL TANK SENSOR	20 A	3	--			500 VA	500 VA	--	1	20 A	ALARM	8
9	--	--	--	--	500 VA	0 VA			--	--	--	SPACE ONLY	10
11	--	--	--	--			500 VA	0 VA	--	--	--	SPACE ONLY	12
13	SPARE	20 A	2	--	0 VA	0 VA			--	2	20 A	SPD	14
15	--	--	--	--			0 VA	0 VA	--	--	--	--	16
17	SHUNT TRIP	--	--	--	0 VA	240 VA			--	1	20 A	EPO/SHUNT TRIP CONTROL	18
19	SPARE	20 A	1	--			0 VA	500 VA	--	1	20 A	DISPENSER PUMP	20
21	SPACE ONLY	--	--	--	0 VA	0 VA			--	1	20 A	SPARE	22
23	SPACE ONLY	--	--	--			0 VA	0 VA	--	1	20 A	SPARE	24
25	TS-1001	20 A	1	--	120 VA	0 VA			--	1	20 A	SPARE	26
27	SPARE	20 A	1	--			0 VA	0 VA	--	--	--	SWITCHED NEUTRAL	28
29	SHUNT TRIP	20 A	1	--	0 VA	0 VA			--	1	20 A	SHUNT TRIP	30
31	SPACE ONLY	--	--	--			0 VA	0 VA	--	1	20 A	SPARE	32
33	SPACE ONLY	--	--	--	0 VA	0 VA			--	--	--	SPACE ONLY	34
35	SPACE ONLY	--	--	--			0 VA	0 VA	--	--	--	SPACE ONLY	36
37	SPACE ONLY	--	--	--	0 VA	0 VA			--	--	--	SPACE ONLY	38
39	SPACE ONLY	--	--	--			0 VA	0 VA	--	--	--	SPACE ONLY	40
41	SPACE ONLY	--	--	--	0 VA	0 VA			--	--	--	SPACE ONLY	42
				Total Load:	5200 VA		5340 VA						
				Total Amps:	43 A		45 A						

Load Classification	Connected Load	Connected Current	Design Factor	Design Load	Design Current
Lighting	0 VA	0 A	0.00%	0 VA	0 A
Receptacles	0 VA	0 A	0.00%	0 VA	0 A
Data	0 VA	0 A	0.00%	0 VA	0 A
Motor	0 VA	0 A	0.00%	0 VA	0 A
Cooling	0 VA	0 A	0.00%	0 VA	0 A
Heating	0 VA	0 A	0.00%	0 VA	0 A
Kitchen	0 VA	0 A	0.00%	0 VA	0 A
Other	0 VA	0 A	0.00%	0 VA	0 A
Spare	2860 VA	12 A	50.00%	1430 VA	6 A
Totals:	10540 VA	44 A		7574 VA	32 A

Notes:
1. Contractor shall provide full size neutral and ground bus.
2. Contractor shall balance phases to within +/-10%.

Location:	
Supply From:	LP1
Mounting:	Surface
Enclosure:	Type 1

Summary	
Voltage:	120/240 Single
Phases	1
Wires:	3
Neutral:	100.00%
Ground Bus:	Yes
A.I.C. Rating:	42k
Mains Type:	MLO
Bus Rating:	100 A
Total Amps:	32 A

Additional Notes:
PROVIDE WITH FEED THRU LUGS.

Texas Department of Transportation

COPYRIGHT © 2021

DFW Consulting Group, Inc.
1616 Corporate Court, Suite 100
Irving, Tx 75038
(972) 929-1199
www.dfwcgi.com
Project No. .2004
Firm Registration No. .720

STATE OF TEXAS
JOHN HALEY
112905
LICENSED
PROFESSIONAL ENGINEER
04/21/2021

DALLAS DISTRICT (18)
COLLIN COUNTY
McKinney Area Engineering and Maintenance Facility
2205 TX-5, McKinney, TX 75069
PROJECT NO. 18-470420012

ISSUED: 2021.04.21
DRAWN BY: DFWCGI
REVISIONS:

ELECTRICAL SCHEDULES

E4.1

THIS DRAWING CREATED FOR PRODUCTION ON 22"x34" SHEET SIZE. DO NOT SCALE PRINTS.

Panel: MP-2

CKT	Circuit Description	Trip	Poles	Load Classification	A		B		C		Load Classification	Poles	Trip	Circuit Description	CKT
1	HP-10	30 A	2	Heating	3349 VA	2080 VA					Heating	2	30 A	HP-9	2
3	--	--	--	--			3349 VA	2080 VA			--	--	--	--	4
5	HP-11	30 A	2	Heating					2080 VA	2080 VA	Heating	2	30 A	HP-5	6
7	--	--	--	--	2080 VA	2080 VA					--	--	--	--	8
9	HP-6	40 A	2	Heating			3328 VA	3328 VA			Heating	2	40 A	HP-7	10
11	--	--	--	--					3328 VA	3328 VA	--	--	--	--	12
13	HP-8	40 A	2	Heating	2839 VA	1040 VA					Heating	2	15 A	CU-12	14
15	--	--	--	--			2839 VA	1040 VA			--	--	--	--	16
17	FCU-10	35 A	2	Heating					2610 VA	500 VA	Heating	1	20 A	VEH. BAY MONITOR SYS...	18
19	--	--	--	--	2610 VA	0 VA					Heating	1	20 A	VEH. BAY MONITOR SYS...	20
21	IWH-8	50 A	2	Heating			4160 VA	500 VA			Other	1	20 A	MOD-5 & MOD-6	22
23	--	--	--	--					4160 VA	1920 VA	Heating	1	30 A	MP-2	24
25	EUH-2	30 A	2	Heating	2496 VA	1498 VA					Heating	2	20 A	EUH-1	26
27	--	--	--	--			2496 VA	1498 VA			--	--	--	--	28
29	VEF-2	20 A	3	Motor					763 VA	1321 VA	Motor	3	20 A	VEF-1	30
31	--	--	--	--	763 VA	1321 VA					--	--	--	--	32
33	--	--	--	--			763 VA	1321 VA			--	--	--	--	34
35	RH-1	20 A	1	Heating					120 VA	120 VA	Heating	1	20 A	RH-2	36
37	MOD-7	20 A	1	Other	500 VA	120 VA					Heating	1	20 A	RH-4	38
39	RH-3	20 A	1	Heating			120 VA	555 VA			Motor	3	35 A	PF-1	40
41	IWH-10	50 A	2	Heating					4160 VA	555 VA	--	--	--	--	42
43	--	--	--	--	4160 VA	555 VA					--	--	--	--	44
45	MOD-9, MOD-10, MOD-11	20 A	1	Other			750 VA	720 VA			Heating	1	15 A	EF-2	46
47	MOD-3 & MOD-4	20 A	1	Other					500 VA	3000 VA	--	2	50 A	SPARE	48
49	MOD-1 & MOD-2	20 A	1	Other	500 VA	3000 VA					--	--	--	--	50
51	PF-1 SMOKE DETECTOR	20 A	1	Other			1000 VA	1000 VA			--	2	40 A	SPARE	52
53	SPARE	20 A	1	--					500 VA	1000 VA	--	--	--	--	54
55	SPARE	40 A	2	--	1000 VA	1000 VA					--	2	40 A	SPARE	56
57	--	--	--	--			1000 VA	1000 VA			--	--	--	--	58
59	SPARE	30 A	2	--					1000 VA	1000 VA	--	2	30 A	SPARE	60
61	--	--	--	--	1000 VA	1000 VA					--	--	--	--	62
63	SPARE	30 A	2	--			1000 VA	1000 VA			--	2	30 A	SPARE	64
65	--	--	--	--					1000 VA	1000 VA	--	--	--	--	66
67	SPARE	20 A	2	--	500 VA	500 VA					--	2	20 A	SPARE	68
69	--	--	--	--			500 VA	500 VA			--	--	--	--	70
71	SPARE	20 A	1	--					500 VA	500 VA	--	1	20 A	SPARE	72
73	SPARE	20 A	1	--	500 VA	500 VA					--	1	20 A	SPARE	74
75	SPARE	20 A	1	--			500 VA	500 VA			--	1	20 A	SPARE	76
77	SPACE ONLY	--	--	--					0 VA	0 VA	--	--	--	SPACE ONLY	78
79	SPACE ONLY	--	--	--	0 VA	0 VA					--	--	--	SPACE ONLY	80
81	SPACE ONLY	--	--	--			0 VA	0 VA			--	--	--	SPACE ONLY	82
83	SPACE ONLY	--	--	--					0 VA	0 VA	--	--	--	SPACE ONLY	84
				Total Load:	36990 VA		36846 VA		37045 VA						
				Total Amps:	308 A		307 A		309 A						

Load Classification	Connected Load	Connected Current	Design Factor	Design Load	Design Current
Lighting	0 VA	0 A	0.00%	0 VA	0 A
Receptacles	0 VA	0 A	0.00%	0 VA	0 A
Data	0 VA	0 A	0.00%	0 VA	0 A
Motor	7915 VA	22 A	112.52%	8906 VA	25 A
Cooling	0 VA	0 A	0.00%	0 VA	0 A
Heating	73716 VA	205 A	80.00%	58973 VA	164 A
Kitchen	0 VA	0 A	0.00%	0 VA	0 A
Other	3750 VA	10 A	100.00%	3750 VA	10 A
Spare	25500 VA	71 A	50.00%	12750 VA	35 A
Totals:	110881 VA	308 A		84378 VA	234 A

Notes:
1. Contractor shall provide full size neutral and ground bus.
2. Contractor shall balance phases to within +/-10%.

Location:	ELEC 125
Supply From:	MSB
Mounting:	Surface
Enclosure:	Type 1

Summary	
Voltage:	120/208 Wye
Phases	3
Wires:	4
Neutral:	100.00%
Ground Bus:	Yes
A.I.C. Rating:	42k
Mains Type:	MLO
Bus Rating:	300 A
Total Amps:	234 A

Additional Notes:
PROVIDE LOCKABLE CIRCUIT BREAKER FOR INSTANTANEOUS WATER HEATERS IWH-8 ON CIRCUIT # 21/23 AND IWH-10 ON CIRCUIT # 41/43.

Panel: MP-1

CKT	Circuit Description	Trip	Poles	Load Classification	A		B		C		Load Classification	Poles	Trip	Circuit Description	CKT
1	FCU-1B	35 A	2	Heating	2610 VA	4118 VA					Heating	2	55 A	FCU-1A	2
3	--	--	--	--			2610 VA	4118 VA			--	--	--	--	4
5	FCU-2A	35 A	2	Heating					2610 VA	4118 VA	Heating	2	55 A	FCU-2B	6
7	--	--	--	--	2610 VA	4118 VA					--	--	--	--	8
9	FCU-3	35 A	2	Heating			2610 VA	2610 VA			Heating	2	35 A	FCU-4	10
11	--	--	--	--					2610 VA	2610 VA	--	--	--	--	12
13	FCU-5	35 A	2	Heating	2610 VA	2610 VA					Heating	2	35 A	FCU-8B	14
15	--	--	--	--			2610 VA	2610 VA			--	--	--	--	16
17	(RE)GWH	25 A	2	Motor					1768 VA	4118 VA	Heating	2	55 A	FCU-6	18
19	--	--	--	--	1768 VA	4118 VA					--	--	--	--	20
21	HP-1	45 A	2	Heating			3349 VA	4118 VA			Heating	2	55 A	FCU-7	22
23	--	--	--	--					3349 VA	4118 VA	--	--	--	--	24
25	FCU-9	35 A	2	Heating	2610 VA	2610 VA					Heating	2	35 A	FCU-8A	26
27	--	--	--	--			2610 VA	2610 VA			--	--	--	--	28
29	HP-3	30 A	2	Heating					2080 VA	2610 VA	Heating	2	35 A	FCU-11	30
31	--	--	--	--	2080 VA	2610 VA					--	--	--	--	32
33	IWH-1	40 A	2	Heating			3120 VA	3349 VA			Heating	2	45 A	HP-2	34
35	--	--	--	--					3120 VA	3349 VA	--	--	--	--	36
37	IWH-2	40 A	2	Heating	3120 VA	2080 VA					Heating	2	30 A	HP-4	38
39	--	--	--	--			3120 VA	2080 VA			--	--	--	--	40
41	IWH-4	50 A	2	Heating					4160 VA	3120 VA	Heating	2	40 A	IWH-3	42
43	--	--	--	--	4160 VA	3120 VA					--	--	--	--	44
45	IWH-6	40 A	2	Heating			3120 VA	4160 VA			Heating	2	50 A	IWH-5	46
47	--	--	--	--					3120 VA	4160 VA	--	--	--	--	48
49	DC-1	60 A	3	Motor	1692 VA	3120 VA					Heating	2	40 A	IWH-7	50
51	--	--	--	--			1692 VA	3120 VA			--	--	--	--	52
53	--	--	--	--					1692 VA	750 VA	Motor	2	20 A	CISTERN PUMP	54
55	IWH-9	90 A	3	Heating	8000 VA	750 VA					--	--	--	--	56
57	--	--	--	--			8000 VA	500 VA			Other	2	20 A	GEN. WATER JACKET HTR	58
59	--	--	--	--					8000 VA	500 VA	--	--	--	--	60
61	TAF-1	20 A	1	Motor	528 VA	500 VA					Other	1	20 A	GEN. LIGHTS/RECEPTS	62
63	TAF-2	20 A	1	Motor			528 VA	750 VA			Other	1	20 A	GEN. BATTERY CHARGER	64
65	EXT. WP/GFI RECEPTS	20 A	1	Receptacles					360 VA	1600 VA	Motor	1	20 A	IRRIGATION PUMP	66
67	BMS PANEL	20 A	1	Other	500 VA	180 VA					Receptacles	1	20 A	LAV. RM. 111	68
69	LAV. RM. 118	20 A	1	Receptacles			180 VA	180 VA			Receptacles	1	20 A	LAV. RM. 109	70
71	LAV. RM. 119	20 A	1	Receptacles					180 VA	500 VA	Motor	1	15 A	EF-3	72
73	FCU SD RM. 107A	20 A	1	Other	1000 VA	1000 VA					--	2	50 A	SPARE	74
75	FCU SD RM. 115	20 A	1	Other			1000 VA	1000 VA			--	--	--	--	76
77	FCU SD RM. 120	20 A	1	Other					1000 VA	1000 VA	--	2	40 A	SPARE	78
79	SPARE	40 A	2	--	1000 VA	1000 VA					--	--	--	--	80
81	--	--	--	--			1000 VA	1000 VA			--	2	30 A	SPARE	82
83	SPARE	20 A	1	--					500 VA	1000 VA	--	--	--	--	84
				Total Load:	66226 VA		67757 VA		68104 VA						
				Total Amps:	552 A		567 A		569 A						

Load Classification	Connected Load	Connected Current	Design Factor	Design Load	Design Current
Lighting	0 VA	0 A	0.00%	0 VA	0 A
Receptacles	1080 VA	3 A	100.00%	1080 VA	3 A
Data	0 VA	0 A	0.00%	0 VA	0 A
Motor	13267 VA	37 A	109.56%	14536 VA	40 A
Cooling	0 VA	0 A	0.00%	0 VA	0 A
Heating	173490 VA	482 A	80.00%	138792 VA	385 A
Kitchen	0 VA	0 A	0.00%	0 VA	0 A
Other	5750 VA	16 A	100.00%	5750 VA	16 A
Spare	8500 VA	24 A	50.00%	4250 VA	12 A
Totals:	202087 VA	561 A		164408 VA	456 A

Notes:
1. Contractor shall provide full size neutral and ground bus.
2. Contractor shall balance phases to within +/-10%.

Location:	ELEC. 117
Supply From:	MSB
Mounting:	Surface
Enclosure:	Type 1

Summary	
Voltage:	120/208 Wye
Phases	3
Wires:	4
Neutral:	100.00%
Ground Bus:	Yes
A.I.C. Rating:	42k
Mains Type:	MLO
Bus Rating:	800 A
Total Amps:	456 A

Additional Notes:
PROVIDE LOCKABLE CIRCUIT BREAKER FOR INSTANTANEOUS WATER HEATERS IWH-1 ON CIRCUIT # 33/35, IWH-2 ON CIRCUIT # 37/39, IWH-3 ON CIRCUIT # 42/44, IWH-4 ON CIRCUIT # 41/43, IWH-5 ON CIRCUIT # 46/48, IWH-6 ON CIRCUIT # 45/47, IWH-7 ON CIRCUIT # 50/52, AND IWH-9 ON CIRCUIT # 55/57/59.

Texas Department of Transportation
COPYRIGHT © 2021

DFW Consulting Group, Inc.
1616 Corporate Court, Suite 100
Irving, Tx 75038
(972) 929-1199
www.dfwcgi.com
Project No. .2004
Firm Registration No. .720

STATE OF TEXAS
JOHN HALEY
112905
LICENSED
PROFESSIONAL ENGINEER
04/21/2021

DALLAS DISTRICT (18)
COLLIN COUNTY
McKinney Area Engineering and Maintenance Facility
2205 TX-5, McKinney, TX 75069
PROJECT NO. 18-470420012

ISSUED: 2021.04.21
DRAWN BY: DFWCGI
REVISIONS:

ELECTRICAL SCHEDULES

E4.2

THIS DRAWING CREATED FOR PRODUCTION ON 22"x34" SHEET SIZE. DO NOT SCALE PRINTS.

Panel: P2

CKT	Circuit Description	Trip	Poles	Load Classification	A		B		C		Load Classification	Poles	Trip	Circuit Description	CKT
1	RECEPTS RM. 127	20 A	1	Receptacles	720 VA	720 VA					Receptacles	1	20 A	RECEPTS CORRIDOR	2
3	RECEPTS VEH. SHOP BAY	20 A	1	Receptacles			900 VA	900 VA			Receptacles	1	20 A	RECEPTS VEH. SHOP BAY	4
5	RECEPTS RM. 129 & 130	20 A	1	Receptacles					360 VA	500 VA	Other	1	20 A	DOAS/DC-1 SMOKE...	6
7	RECEPTACLES	20 A	1	Receptacles	720 VA	360 VA					Receptacles	1	20 A	RECEPTACLES	8
9	VEH. SHOP BAY DOORS...	20 A	3	Motor			1800 VA	1800 VA			Motor	3	20 A	VEH. SHOP BAY DOORS...	10
11	--	--	--	--					1800 VA	1800 VA	--	--	--	--	12
13	--	--	--	--	1800 VA	1800 VA					--	--	--	--	14
15	RECEPTACLES	20 A	1	Receptacles			720 VA	750 VA			Other	2	20 A	GPS ANTENNA	16
17	RADIO ANTENNA	20 A	2	Other					750 VA	750 VA	--	--	--	--	18
19	--	--	--	--	750 VA	500 VA					Other	1	15 A	DC-1 CONTROLLER	20
21	RECEPTS EXT. WP/GFI	20 A	1	Receptacles			540 VA	500 VA			--	1	20 A	SPARE	22
23	SPARE	20 A	1	--					500 VA	500 VA	--	1	20 A	SPARE	24
25	SPARE	20 A	1	--	500 VA	500 VA					--	1	20 A	SPARE	26
27	SPARE	20 A	1	--			500 VA	500 VA			--	1	20 A	SPARE	28
29	SPARE	20 A	1	--					500 VA	500 VA	--	1	20 A	SPARE	30
31	SPACE ONLY	--	--	--	0 VA	0 VA					--	--	--	SPACE ONLY	32
33	SPACE ONLY	--	--	--			0 VA	0 VA			--	--	--	SPACE ONLY	34
35	SPACE ONLY	--	--	--					0 VA	0 VA	--	--	--	SPACE ONLY	36
37	SPACE ONLY	--	--	--	0 VA	0 VA					--	--	--	SPACE ONLY	38
39	SPACE ONLY	--	--	--			0 VA	0 VA			--	--	--	SPACE ONLY	40
41	SPACE ONLY	--	--	--					0 VA	0 VA	--	--	--	SPACE ONLY	42
	SPACE ONLY			Total Load:	8370 VA		8910 VA		7960 VA						
				Total Amps:	70 A		75 A		66 A						

Load Classification	Connected Load	Connected Current	Design Factor	Design Load	Design Current
Lighting	0 VA	0 A	0.00%	0 VA	0 A
Receptacles	5940 VA	16 A	100.00%	5940 VA	16 A
Data	0 VA	0 A	0.00%	0 VA	0 A
Motor	10800 VA	30 A	106.25%	11475 VA	32 A
Cooling	0 VA	0 A	0.00%	0 VA	0 A
Heating	0 VA	0 A	0.00%	0 VA	0 A
Kitchen	0 VA	0 A	0.00%	0 VA	0 A
Other	4000 VA	11 A	100.00%	4000 VA	11 A
Spare	4500 VA	12 A	50.00%	2250 VA	6 A
Totals:	25240 VA	70 A		23665 VA	66 A

Notes:
1. Contractor shall provide full size neutral and ground bus.
2. Contractor shall balance phases to within +/-10%.

Location:	ELEC 125
Supply From:	MSB
Mounting:	Surface
Enclosure:	Type 1

Summary	
Voltage:	120/208 Wye
Phases	3
Wires:	4
Neutral:	100.00%
Ground Bus:	Yes
A.I.C. Rating:	42k
Mains Type:	MLO
Bus Rating:	125 A
Total Amps:	66 A

Additional Notes:
PROVIDE WITH FEED THRU LUGS.

Panel: WB

CKT	Circuit Description	Trip	Poles	Load Classification	A		B		Load Classification	Poles	Trip	Circuit Description	CKT
1	CLWR-1	30 A	2	Motor	3600 VA	180 VA			Receptacles	1	20 A	GFI RECEPT @ PANEL	2
3	--	--	--	--			3600 VA	350 VA	Lighting	1	20 A	WASHBAY EXT. LIGHTING	4
5	POWER WASHER	20 A	1	Receptacles	180 VA	1050 VA			Lighting	1	20 A	WASHBAY INT. LIGHTING	6
7	SPACE ONLY	--	--	--			0 VA	0 VA	--	--	--	SPACE ONLY	8
9	SPACE ONLY	--	--	--	0 VA	0 VA			--	--	--	SPACE ONLY	10
11	SPACE ONLY	--	--	--			0 VA	0 VA	--	--	--	SPACE ONLY	12
13	SPACE ONLY	--	--	--	0 VA	0 VA			--	--	--	SPACE ONLY	14
15	SPACE ONLY	--	--	--			0 VA	0 VA	--	--	--	SPACE ONLY	16
17	SPACE ONLY	--	--	--	0 VA	0 VA			--	--	--	SPACE ONLY	18
19	SPACE ONLY	--	--	--			0 VA	0 VA	--	--	--	SPACE ONLY	20
21	SPACE ONLY	--	--	--	0 VA	0 VA			--	--	--	SPACE ONLY	22
23	SPACE ONLY	--	--	--			0 VA	0 VA	--	--	--	SPACE ONLY	24
				Total Load:	5010 VA		3950 VA						
				Total Amps:	42 A		33 A						

Load Classification	Connected Load	Connected Current	Design Factor	Design Load	Design Current
Lighting	1400 VA	6 A	125.00%	1750 VA	7 A
Receptacles	360 VA	2 A	100.00%	360 VA	2 A
Data	0 VA	0 A	0.00%	0 VA	0 A
Motor	7200 VA	30 A	125.00%	9000 VA	38 A
Cooling	0 VA	0 A	0.00%	0 VA	0 A
Heating	0 VA	0 A	0.00%	0 VA	0 A
Kitchen	0 VA	0 A	0.00%	0 VA	0 A
Other	0 VA	0 A	0.00%	0 VA	0 A
Spare	0 VA	0 A	0.00%	0 VA	0 A
Totals:	8960 VA	37 A		11110 VA	46 A

Notes:
1. Contractor shall provide full size neutral and ground bus.
2. Contractor shall balance phases to within +/-10%.

Location:	HERBICIDE...
Supply From:	LP1
Mounting:	Surface
Enclosure:	Type 1

Summary	
Voltage:	120/240 Single
Phases	1
Wires:	3
Neutral:	100.00%
Ground Bus:	Yes
A.I.C. Rating:	42k
Mains Type:	MLO
Bus Rating:	100 A
Total Amps:	46 A

Additional Notes:
PROVIDE WITH FEED THRU LUGS.

LIGHT FIXTURE SCHEDULE

TYPE	DESCRIPTION	MANUFACTURER	MODEL NO.	LAMPS	VOLTAGE	WATTAGE
A	2X2 VOLUMETRIC LED TROFFER	LITHONIA LIGHTING	2FSL2-48L-MVOLT-EZ1-LP840	4000K INTEGRAL LED	120 V	41 W
A2	2X2 VOLUMETRIC LED TROFFER	LITHONIA LIGHTING	2FSL2-60L-MVOLT-EZ1-LP840	4000K INTEGRAL LED	120 V	54 W
A2E	2X2 VOLUMETRIC LED TROFFER WITH EMERGENCY BATTERY PACK	LITHONIA LIGHTING	2FSL2-60L-MVOLT-EZ1-LP840-EL7L	4000K INTEGRAL LED	120 V	54 W
AE	2X2 VOLUMETRIC LED TROFFER WITH EMERGENCY BATTERY PACK	LITHONIA LIGHTING	2FSL2-48L-MVOLT-EZ1-LP840-EL7L	4000K INTEGRAL LED	120 V	41 W
B	4" ROUND DOWNLIGHT	LITHONIA LIGHTING	LDN4-40/20-LO4AR-LD-MVOLT-EZ1	4000K INTEGRAL LED	120 V	22 W
BE	4" ROUND DOWNLIGHT	LITHONIA LIGHTING	LDN4-40/20-LO4AR-LD-MVOLT-EZ1-EL	4000K INTEGRAL LED	120 V	22 W
C	HIGHBAY HIGH-PRESSURE LED	LITHONIA LIGHTING	FHE-L24-1800LM-ACL-MD-MVOLT-GZ10-40K-80CRI	4000K INTEGRAL LED	120 V	113 W
CE	HIGHBAY HIGH-PRESSURE LED WITH EMERGENCY BATTERY PACK	LITHONIA LIGHTING	FHE-L24-1800LM-ACL-MD-MVOLT-GZ10-40K-80CRI-E10WLCP	4000K INTEGRAL LED	120 V	113 W
D	48" LED STRIPLIGHT	LITHONIA LIGHTING	ZL1D-L48-5000LM-FST-MVOLT-40K-80CRI	4000K INTEGRAL LED	120 V	41 W
DE	48" LED STRIPLIGHT	LITHONIA LIGHTING	ZL1D-L48-5000LM-FST-MVOLT-40K-80CRI-E10WLCP	4000K INTEGRAL LED	120 V	41 W
F-8	SLOT LED RECESSED LINEAR	MARK LIGHTING	SL1L-8FT-90CRI-40K-600LMF-MVOLT	4000K INTEGRAL LED	120 V	41 W
G	WALLPAK WASHBAY	LITHONIA LIGHTING	TWH-175M-120DNA	4000K INTEGRAL LED	120 V	175 W
H	WALLPAK WASHBAY	LITHONIA LIGHTING	TWH-175M-120-PE-DNA	4000K INTEGRAL LED	120 V	175 W
S1	20' POLE LIGHT - SINGLE	LITHONIA LIGHTING	DSX0-LED-P4-40K-T4M-MVOLT	4000K INTEGRAL LED	208 V	92 W
S2	20' POLE LIGHT - DOUBLE	LITHONIA LIGHTING	DSX0-LED-P3-40K-T5M-MVOLT	4000K INTEGRAL LED	208 V	184 W
S3	20' POLE LIGHT - TRIPPLE	LITHONIA LIGHTING	DSX0-LED-P3-40K-T5M-MVOLT	4000K INTEGRAL LED	208 V	276 W
SB	36" LED BOLLARD LIGHTS	LITHONIA LIGHTING	RADB-P4-40K-ASY-208-BTS-DBLXD	4000K INTEGRAL LED	208 V	19 W
W	WALL PACK WITH EMERGENCY BATTERY BACKUP	LITHONIA LIGHTING	DSXW1-LED-10C-1000-40K-T4M-MVOLT-ELCW	4000K INTEGRAL LED	208 V	39 W
WE	WALL PACK WITH EMERGENCY BATTERY BACKUP	LITHONIA LIGHTING	DSXW1-LED-10C-1000-40K-T4M-MVOLT-ELCW	4000K INTEGRAL LED	208 V	39 W
X	EDGE-LIT EXIT SIGN	LITHONIA LIGHTING	EDG-1/2-R-EL	N/A	120 V	3 W

Panel: P1

CKT	Circuit Description	Trip	Poles	Load Classification	A		B		C		Load Classification	Poles	Trip	Circuit Description	CKT
1	FURNITURE RM. 105	20 A	1	Receptacles	720 VA	720 VA					Receptacles	1	20 A	FURNITURE RM. 105	2
3	FURNITURE RM. 105	20 A	1	Receptacles			180 VA	720 VA			Receptacles	1	20 A	FURNITURE RM. 105	4
5	FURNITURE RM. 105	20 A	1	Receptacles					720 VA	180 VA	Receptacles	1	20 A	FURNITURE RM. 105	6
7	FURNITURE RM. 105	20 A	1	Receptacles	180 VA	180 VA					Receptacles	1	20 A	FURNITURE RM. 105	8
9	RECEPTS. RM 119	20 A	1	Receptacles			540 VA	540 VA			Receptacles	1	20 A	WS-1	10
11	ICE-MAKER	20 A	1	Other					180 VA	540 VA	Receptacles	1	20 A	RECEPTS RM. 119	12
13	RECEPTS CORRIDOR RM...	20 A	1	Receptacles	720 VA	1200 VA					Other	1	20 A	DW FOUNTAIN	14
15	RECEPTS. RM 117, RM. 116	20 A	1	Receptacles			720 VA	360 VA			Receptacles	1	20 A	RECEPTS. MECH RM. 115	16
17	RECEPTS & TV RM 113E	20 A	1	Receptacles					900 VA	900 VA	Receptacles	1	20 A	RECEPTS RM 102, 103	18
19	RECEPT RM. 107	20 A	1	Receptacles	180 VA	540 VA					Receptacles	1	20 A	RECEPTS RM 113B-D	20
21	COPIER/PLOTTER RM....	20 A	2	Receptacles			500 VA	1080 VA			Receptacles	1	20 A	RECEPTS RM. 113B	22
23	--	--	--	--					500 VA	360 VA	Receptacles	1	20 A	RECEPTS RM 113A	24
25	RECEPTS. RM. 113	20 A	1	Receptacles	900 VA	500 VA					Receptacles	2	20 A	PRINTER RM. 113A	26
27	RECEPTS RM. 113	20 A	1	Other			720 VA	500 VA			--	--	--	--	28
29	RECEPTS RM. 113	20 A	1	Receptacles					900 VA	720 VA	Other	1	20 A	RECEPTS RM. 113	30
31	RECEPTS RM. 109,110, 111	20 A	1	Receptacles	900 VA	360 VA					Receptacles	1	20 A	TV'S RM. 113	32
33	RECEPTS RM. 101	20 A	1	Receptacles			540 VA	1740 VA			Kitchen;...	1	20 A	RECEPTS RM. 112	34
35	RECEPTS & TV'S RM. 104	20 A	1	Receptacles;...					900 VA	720 VA	Receptacles	1	20 A	RECEPTS RM. 104	36
37	RECEPTS RM. 105A, 105B...	20 A	1	Receptacles	900 VA	1080 VA					Receptacles	1	20 A	RECEPTS RM. 105A, 105B...	38
39	RECEPTS RM. 105D	20 A	1	Other			720 VA	720 VA			Receptacles	1	20 A	RECEPTS RM. 105	40
41	RECEPTS RM. 107A	20 A	1	Receptacles					540 VA	720 VA	Receptacles	1	20 A	RECEPTS RM. 106 & 107	42
43	RECEPTS RM. 107	20 A	1	Receptacles	540 VA	540 VA					Receptacles	1	20 A	RECEPTS FLOOR RM. 107	44
45	RECEPTS FLOOR RM. 107	20 A	1	Receptacles			540 VA	1200 VA			Kitchen	1	20 A	REFRIGERATOR RM. 108	46
47	MICROWAVE RM. 108	20 A	1	Kitchen					1500 VA	1500 VA	Kitchen	1	20 A	MICROWAVE RM. 108	48
49	COFFEE MAKER RM. 108	20 A	1	Kitchen	1200 VA	1500 VA					Kitchen	1	20 A	MICROWAVE RM. 108	50
51	MICROWAVE RM. 108	20 A	1	Kitchen			1500 VA	1200 VA			Kitchen	1	20 A	REFRIGERATOR RM. 108	52
53	RECEPT RM. 107	20 A	1	Receptacles					180 VA	1200 VA	Kitchen	1	20 A	RECEPT COUNTER RM. 108	54
55	IRRIGATION CONTROLLER	20 A	1	Other	500 VA	540 VA					Receptacles	1	20 A	RECEPTS RM. 108	56
57	LIGHTING - SITE NE/E	20 A	2	Lighting			1212 VA	639 VA			Lighting	2	20 A	LIGHTING - SITE NW	58
59	--	--	--	--					1212 VA	639 VA	--	--	--	--	60
61	LIGHTING -...	20 A	2	Lighting	1228 VA	500 VA					Data	2	30 A	IT SERVER RACK	62
63	--	--	--	--			184 VA	500 VA			--	--	--	--	64
65	RECEPTS COUNTER RM....	20 A	1	Receptacles					180 VA	500 VA	Data	2	30 A	IT SERVER RACK	66
67	TV'S RM. 107	20 A	1	Receptacles	360 VA	500 VA					--	--	--	--	68
69	LIGHTING - EXT....	20 A	2	Lighting			349 VA	500 VA			Other	1	20 A	FACP FIRE ALARM CIRCUIT	70
71	--	--	--	--					0 VA	650 VA	Other	1	20 A	FLAG POLE, SINAGE,...	72
73	FURNITURE RM. 113	20 A	1	Receptacles	360 VA	540 VA					Receptacles	1	20 A	RECEPTS EXT. WP/GFI	74
75	FURNITURE RM. 113	20 A	1	Receptacles			360 VA	360 VA			Receptacles	1	20 A	FURNITURE RM. 113	76
77	FURNITURE RM. 113	20 A	1	Receptacles					360 VA	360 VA	Receptacles	1	20 A	FURNITURE RM. 113	78
79	FURNITURE RM. 113	20 A	1	Receptacles	360 VA	360 VA					Receptacles	1	20 A	FURNITURE RM. 113	80
81	DISHWASHER RM. 108	20 A	1	Kitchen			1440 VA	360 VA			Receptacles	1	20 A	FURNITURE RM. 113	82
83	ICE-MAKER RM. 108	20 A	1	Kitchen					500 VA	180 VA	Receptacles	1	20 A	FURNITURE RM. 113	84
85	ICE-MAKER RM. 108	20 A	1	Kitchen	500 VA	180 VA					Receptacles	1	20 A	FURNITURE RM. 113	86
87	LIGHTING 101A, 101, 104	20 A	1	Lighting			1265 VA	180 VA			Receptacles	1	20 A	FURNITURE RM. 113	88
89	LIGHTING...	20 A	1	Lighting					933 VA	180 VA	Receptacles	1	20 A	FURNITURE RM. 113	90
91	PL1	20 A	1	Lighting	500 VA	1543 VA					Lighting	1	20 A	LIGHTING 105,106,107,108	92
93	EXT. WP/GFI RECEPTS	20 A	1	Receptacles			720 VA	1260 VA			Lighting	1	20 A	LIGHTING RM...	94
95	EXT. WP/GFI RECEPTS	20 A	1	Receptacles					720 VA	500 VA	--	1	20 A	SPARE	96
97	SPARE	20 A	1	--	500 VA	500 VA					--	1	20 A	SPARE	98
99	SPARE	20 A	1	--			500 VA	500 VA			--	1	20 A	SPARE	100
101	SPARE	20 A	1	--					500 VA	500 VA	--	1	20 A	SPARE	102
103	SPARE	20 A	1	--	500 VA	500 VA					--	1	20 A	SPARE	104
105	SPARE	20 A	1	--			500 VA	500 VA			--	1	20 A	SPARE	106
107	SPARE	20 A	1	--					500 VA	500 VA	--	1	20 A	SPARE	108
109	SPARE	20 A	1	--	500 VA	500 VA					--	1	20 A	SPARE	110
111	SPARE	20 A	1	--			500 VA	500 VA			--	1	20 A	SPARE	112
113	SPACE ONLY	--	--	--					0 VA	0 VA	--	--	--	SPACE ONLY	114
115	SPACE ONLY	--	--	--	0 VA	0 VA					--	--	--	SPACE ONLY	116
117	SPACE ONLY	--	--	--			0 VA	0 VA			--	--	--	SPACE ONLY	118
119	SPACE ONLY	--	--	--					0 VA	0 VA	--	--	--	SPACE ONLY	120
121	SPACE ONLY	--	--	--	0 VA	0 VA					--	--	--	SPACE ONLY	122
123	SPACE ONLY	--	--	--			0 VA	0 VA			--	--	--	SPACE ONLY	124
125	SPACE ONLY	--	--	--					0 VA	0 VA	--	--	--	SPACE ONLY	126
				Total Load:	23831 VA		26349 VA		22074 VA						
				Total Amps:	201 A		222 A		184 A						

Load Classification	Connected Load	Connected Current	Design Factor	Design Load	Design Current
Lighting	10963 VA	30 A	125.00%	13704 VA	38 A
Receptacles	30980 VA	86 A	66.14%	20490 VA	57 A
Data	2000 VA	6 A	100.00%	2000 VA	6 A
Motor	0 VA	0 A	0.00%	0 VA	0 A
Cooling	0 VA	0 A	0.00%	0 VA	0 A
Heating	0 VA	0 A	0.00%	0 VA	0 A
Kitchen	14440 VA	40 A	80.00%	11552 VA	32 A
Other	5190 VA	14 A	100.00%	5190 VA	14 A
Spare	8500 VA	24 A	50.00%	4250 VA	12 A
Totals:	72253 VA	201 A		57366 VA	159 A

Notes:
1. Contractor shall provide full size neutral and ground bus.
2. Contractor shall balance phases to within +/-10%.

Location:	ELEC. 117
Supply From:	MSB
Mounting:	Surface
Enclosure:	Type 1

Summary	
Voltage:	120/208 Wye
Phases	3
Wires:	4
Neutral:	100.00%
Ground Bus:	Yes
A.I.C. Rating:	42k
Mains Type:	MLO
Bus Rating:	225 A
Total Amps:	159 A

Additional Notes:
PROVIDE WITH FEED THRU LUGS AND INTERNAL SURGE PROTECTION DEVICE.
PROVIDE UL LISTED CIRCUIT BREAKER HANDLE-TIE FOR FURNITURE FEED SYSTEMS.

Texas Department of Transportation
COPYRIGHT © 2021

DFW Consulting Group, Inc.
1616 Corporate Court, Suite 100
Irving, Tx 75038
(972) 929-1199
www.dfwcgi.com
Project No. .2004
Firm Registration No. :720

STATE OF TEXAS
JOHN HALEY
112905
LICENSED
PROFESSIONAL ENGINEER
04/21/2021

DALLAS DISTRICT (18)
COLLIN COUNTY
McKinney Area Engineering and Maintenance Facility
2205 TX-5, McKinney, TX 75069
PROJECT NO. 18-470420012

ISSUED: 2021.04.21
DRAWN BY: DFWCGI
REVISIONS:

ELECTRICAL SCHEDULES

E4.3

THIS DRAWING CREATED FOR PRODUCTION ON 22"x34" SHEET SIZE. DO NOT SCALE PRINTS.

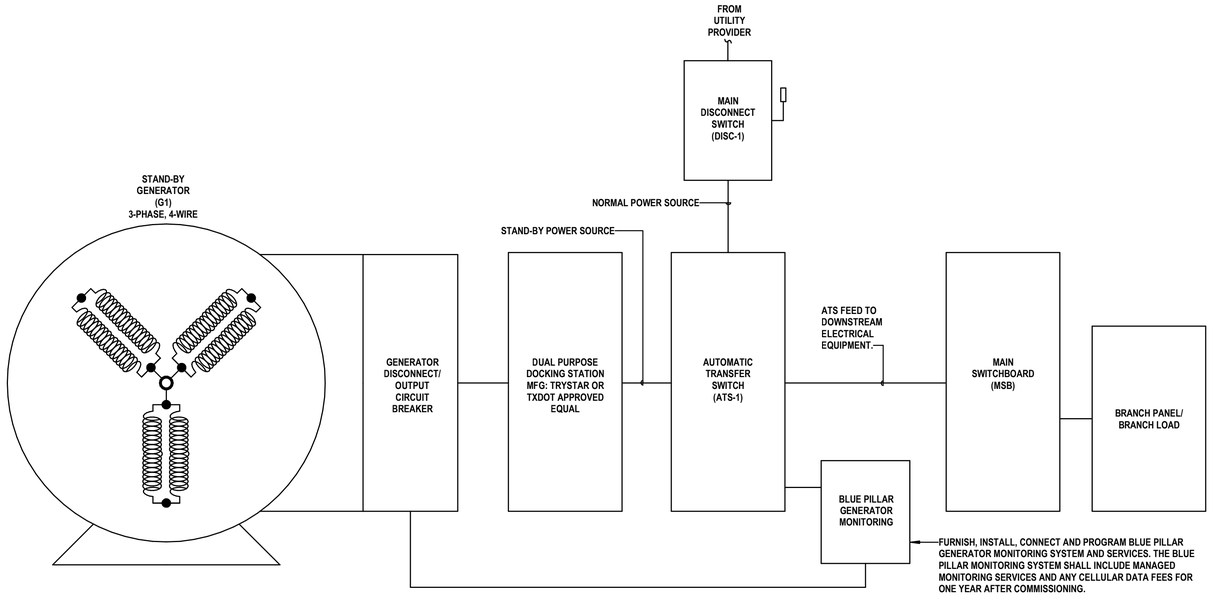

07 STANDY GENERATOR STANDARD INSTALLATION DETAIL
SCALE: NONE

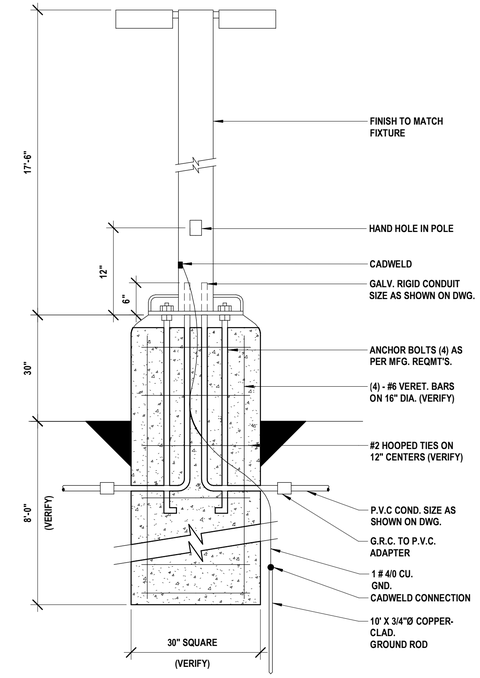

NOTE:
CONTRACTOR SHALL VERIFY CONCRETE DEPTH AND STEEL REQUIREMENTS WITH STRUCTURAL ENGINEER.

03 SITE LIGHTING POLE BASE
SCALE: NONE

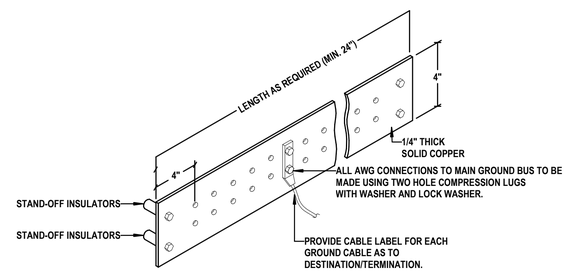

05 TYPICAL ISOLATED GROUND BUS DETAIL
SCALE: NONE

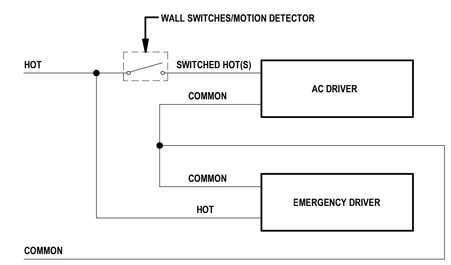

02 SWITCHED EMERGENCY DRIVER
SCALE: NONE

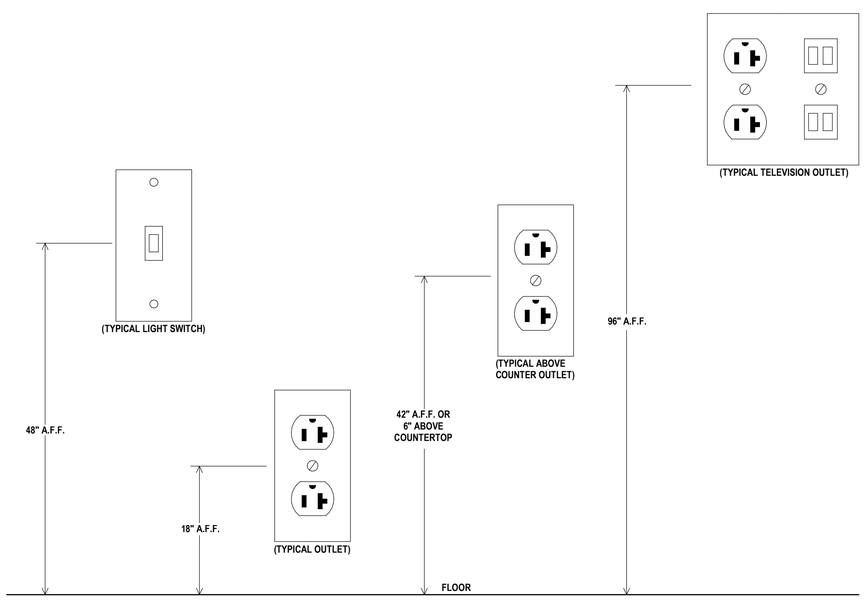

06 TYPICAL DEVICE MOUNTING HEIGHTS
SCALE: NONE

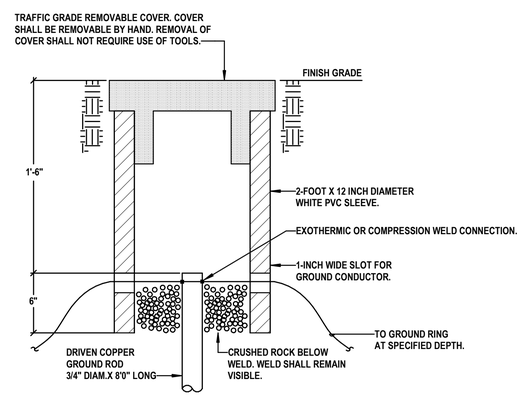

04 GROUND ROD TEST WELL
SCALE: NONE

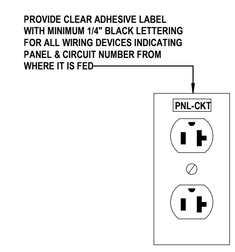

01 RECEPTACLE LABEL
SCALE: NONE

Texas Department of Transportation
COPYRIGHT © 2021

DFW Consulting Group, Inc.
1616 Corporate Court, Suite 100
Irving, Tx 75038
(972) 929-1199
www.dfwcgi.com
Project No. :2004
Firm Registration No. :720

STATE OF TEXAS
JOHN HALEY
112905
LICENSED
PROFESSIONAL ENGINEER
04/21/2021

DALLAS DISTRICT (18)
COLLIN COUNTY
McKinney Area Engineering and Maintenance Facility
2205 TX-5, McKinney, TX 75069
PROJECT NO. 18-470420012

ISSUED: 2021.04.21
DRAWN BY: DFWCGI
REVISIONS:

ELECTRICAL DETAILS

E5.1

THIS DRAWING CREATED FOR PRODUCTION ON 22"x34" SHEET SIZE. DO NOT SCALE PRINTS.

GENERAL NOTES

1	FOR REFERENCE ONLY. LIGHTING CONTROLS PROVIDED BY HORTON CONTROLS GROUP. CONTACT JAMES ADAMS, JADAMS@HORTONCONTROLSGROUP.COM FOR ADDITIONAL INFORMATION.
2	DESIGN BASED AROUND NLIGHT LIGHTING CONTROLS. EQUIVALENT MANUFACTURERS ARE ACCEPTABLE, BUT SHALL BE REVIEWED AND APPROVED BY EOR.

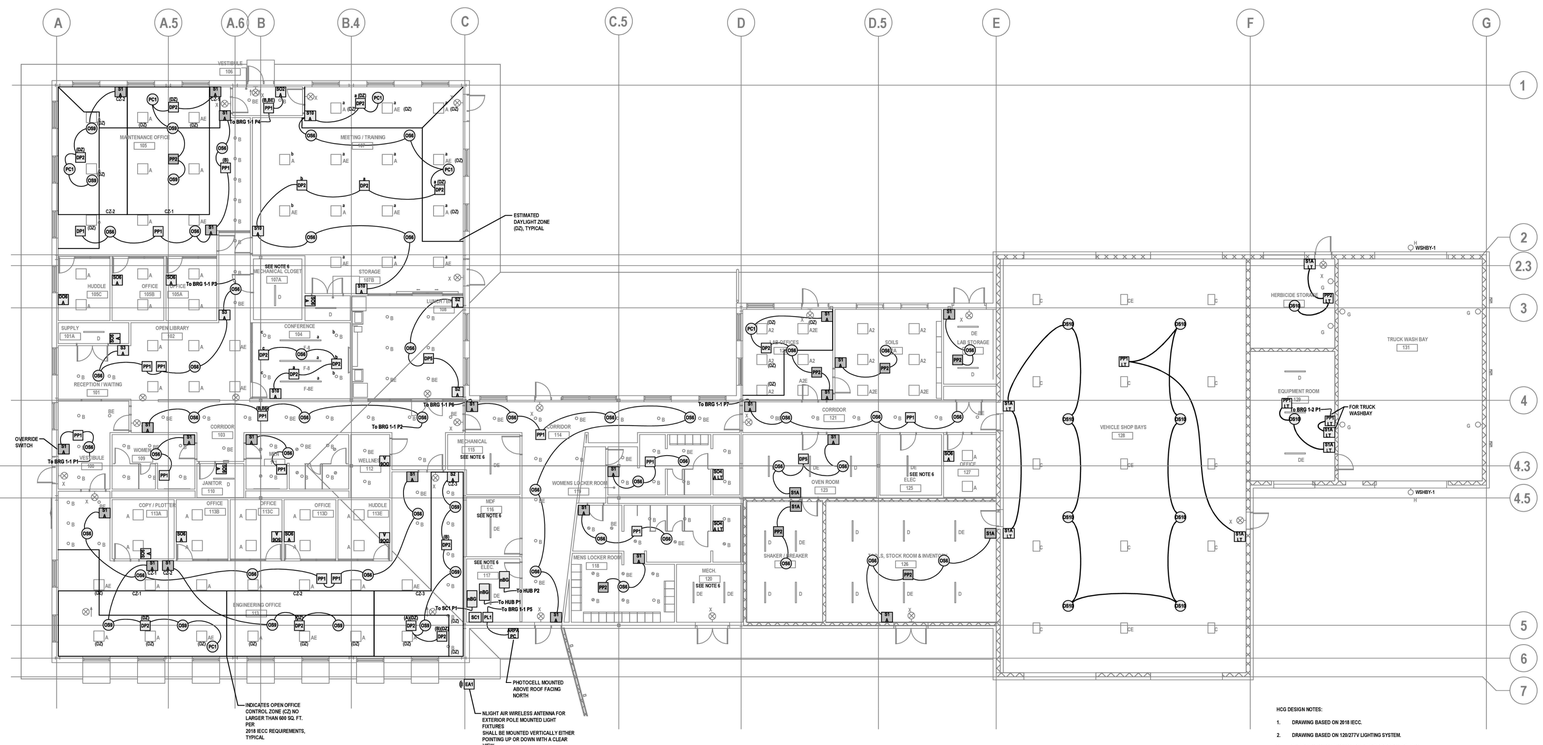

HCG DESIGN NOTES:

1. DRAWING BASED ON 2018 IECC.

2. DRAWING BASED ON 120/277V LIGHTING SYSTEM.

3. EMERGENCY LIGHTING IS ASSUMED TO BE PROVIDED BY EITHER
WALL PACK WITH EMERGENCY BATTERY (BUG-EYES) AND
OR
EXIT
FIXTURES WITH INTEGRAL EMERGENCY BATTERY PACKS. IF NEITHER
OF THESE APPLY, THEN ADDITIONAL EMERGENCY LIGHTING
CONTROL DEVICES WILL BE REQUIRED.

4. VERIFY LIGHT FIXTURES DIMMING PROTOCOL BEFORE PURCHASING LIGHTING CONTROL DEVICES.

5. CONTROLS NOT PROVIDED FOR THIS SPACE FOR OCCUPANT SAFETY OR NOT REQUIRED BY CODE; LIGHTS SHALL BE TURNED ON/OFF VIA TOGGLE SWITCH BY OTHERS.

6. FOR OPEN OFFICE AREAS CONTROLS SHALL BE SET FOR 'AUTO
OFF' AFTER 20 MIN. IN EACH INDIVIDUAL ZONE ONCE VACANCY IS DETECTED TO MEET 2018 IECC REQUIREMENTS.

7. LIGHTING CONTROL DEVICES SHALL BE SET FOR PARTIAL 'ON' TO
50% AND TO 100% WHEN MANUAL SWITCH IS PRESSED.

HORTON CONTROLS GROUP

Created by JDA
FLOOR PLAN
Project: TxDOT Area Engineer and Maintenance Facility

1	ARPA/PC	ARPA PC ARPA PC Photocell intended to be connected directly to ARP.
3	DO6A	DO6 A WSXA PDT D-SA XX Dimming Wall Switch, Passive Dual Technology, Occupancy Controlled Dimming, Vacancy (default) or Auto-On
1	DP1	DP1 NPP16 D EFP Power/Relay Pack, Occupancy Controlled Dimming, External Fault Protection
15	DP2	DP2 NPP16 D EFP SA Power/Relay Pack, Occupancy Controlled Dimming, External Fault Protection, Vacancy (default) or Auto-On
2	DP5	DP5 NPP16 D EFP PA Power/Relay Pack, Occupancy Controlled Dimming, External Fault Protection, Partial on
1	EA1	EA1 NEC7D IN,TAIR G2 nLight Eclypse, nLight AIR adapter for nECY, Generation Two
3	nBG	nBG NBRG 8 KIT Bridge, Kit
10	OS10	OS10 NCM 10 LT Low Voltage Ceiling Mount Sensor, Large Motion / Extended Range 360+ Lens, Low Temperature / High Humidity
44	OS8	OS8 NCM PDT 10 Low Voltage Ceiling Mount Sensor, Passive Dual Technology, Large Motion / Extended Range 360+ Lens
11	OS9	OS9 NCM PDT 9 Low Voltage Ceiling Mount Sensor, Passive Dual Technology, Small Motion / Standard Range 360+ Lens
6	PC1	PC1 NCM ADCX Low Voltage Ceiling Mount Sensor, Photosensitivi ve Auto Dimming, No Wires
1	PL1	PL1 ARP INTENC16 NLT NFC8 MVOLT SC SM Acuity Relay Panel, Include INT and ENC, 16-Size, nLight, 16-field configurable relays, 120-277 VAC, Screw Cover, Surface Mount
15	PP1	PP1 NPP16 EFP Power/Relay Pack, External Fault Protection
3	PP1LT	PP1 LT NPP16 EFP LT Power/Relay Pack, External Fault Protection
7	PP2	PP2 NPP16 EFP SA Power/Relay Pack, External Fault Protection, Vacancy (default) or Auto-On
1	PP2LT	PP2 LT NPP16 EFP SA LT Power/Relay Pack, External Fault Protection, Vacancy (default) or Auto-On, Low Temperature / High Humidity
27	S1A	S1 A NPODMA XX nLight Wired Aesthetic Wallpod
6	S1A LT	S1 A LT NPODMA XX LT nLight Wired Aesthetic Wallpod, Low Temperature / High Humidity
4	S10A	S10 A NPODMA 4S DX XX nLight Wired Aesthetic Wallpod, 4 scene control, Raise/Lower Dimming Without Wires
3	S2A	S2 A NPODMA DX XX nLight Wired Aesthetic Wallpod, Raise/Lower Dimming Without Wires
2	S3A	S3 A NPODMA 3P XX nLight Wired Aesthetic Wallpod, 3-Pole
1	SC1	SC1 NEC7 MVOLT BAC ENC GFXX nLight Eclypse, 120-277 VAC, BACnet, 14 1/4"h x 14 1/4"h x 4"D metal enclosure for ECLYPSE EnergySyte or nLight ECLYPSE, 50/60YZ GFX and PS 150 power supply with CAT5 cable
1	SO2A	SO2 A NWSXA PDT LV XX Aesthetic Wall Switch Occupancy Sensor, Passive Dual Technology, Low Voltage
2	SO4ALT	SO4 A LT WSXA PDT XX LT Wall Switch Sensor, Passive Dual Technology
10	SO6A	SO6 A WSXA PDT SA XX Dimming Wall Switch, Passive Dual Technology, Vacancy (default) or Auto-On

WIRE LEGEND - SITE PLAN	
	CAT5e Pre-terminated CAT5e cable

01 LIGHTING CONTROLS - INTERIOR
SCALE: NONE

Texas Department of Transportation

COPYRIGHT © 2021

DFW Consulting Group, Inc.
1616 Corporate Court, Suite 100
Irving, Tx 75038
(972) 929-1199
www.dfwcgi.com
Project No. .2004
Firm Registration No. .720

STATE OF TEXAS
JOHN HALEY
112905
LICENSED
PROFESSIONAL ENGINEER
04/21/2021

DALLAS DISTRICT (18)
COLLIN COUNTY
McKinney Area Engineering and Maintenance Facility
2205 TX-5, McKinney, TX 75069
PROJECT NO. 18-470420012

ISSUED: 2021.04.21
DRAWN BY: DFWCGI
REVISIONS:

LIGHTING CONTROLS - INTERIOR

E5.2

THIS DRAWING CREATED FOR PRODUCTION ON 22"x34" SHEET SIZE. DO NOT SCALE PRINTS.

GENERAL NOTES

1	FOR REFERENCE ONLY. LIGHTING CONTROLS PROVIDED BY HORTON CONTROLS GROUP. CONTACT JAMES ADAMS, JADAMS@HORTONCONTROLSGROUP.COM FOR ADDITIONAL INFORMATION.
2	DESIGN BASED AROUND NLIGHT LIGHTING CONTROLS. EQUIVALENT MANUFACTURERS ARE ACCEPTABLE, BUT SHALL BE REVIEWED AND APPROVED BY EOR.

SITE PLAN
Project: TxDOT Area Engineer and Maintenance Facility

1	PS1	PS1 NPS 80 Power Supply, 80 mA
2	S1A	S1A NPODMA XX nLight Wired Aesthetic Wallpod

WIRE LEGEND - FLOOR PLAN	
	CAT5e Pre-terminated CAT5e cable
	Low Voltage Low voltage wire

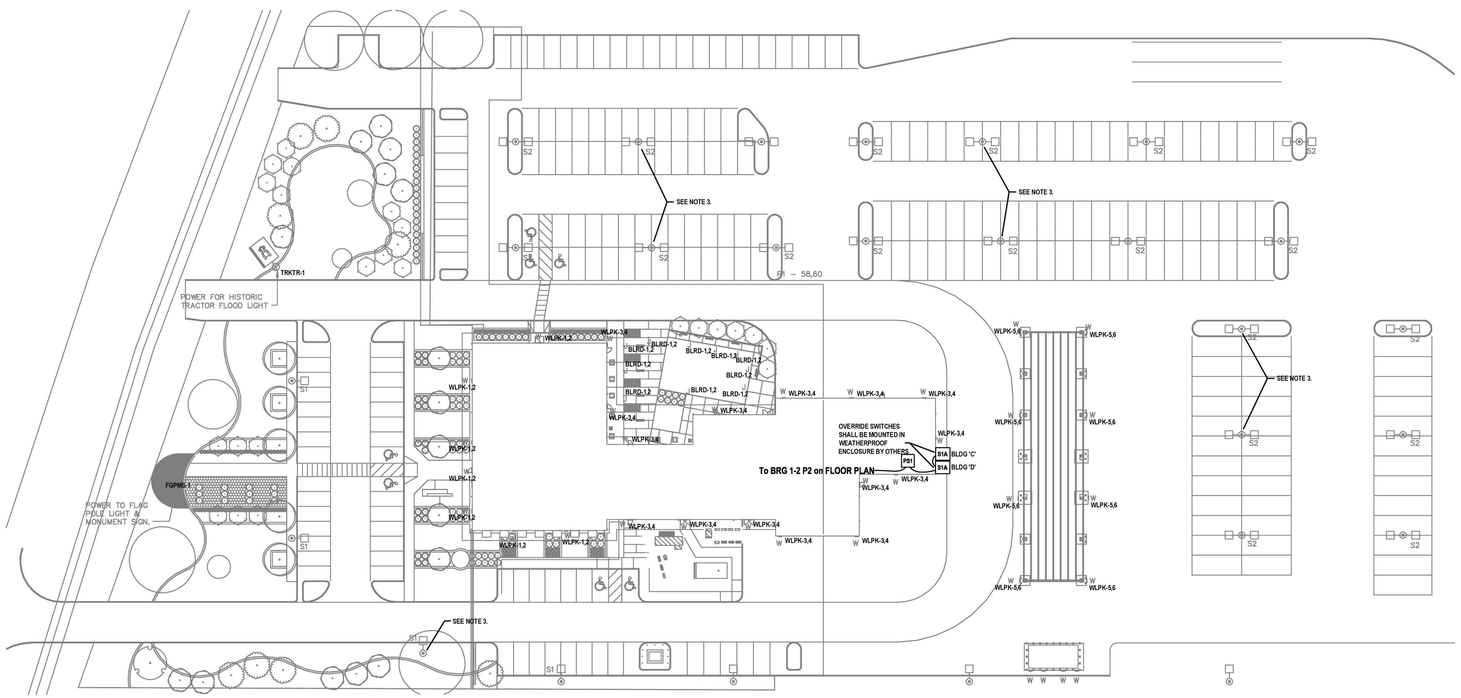

HCG DESIGN NOTES:

1. DRAWING BASED ON 2018 IECC.

2. DRAWING BASED ON 120/277V LIGHTING SYSTEM.

3. POLE LIGHT FIXTURES TYPES 'S1 'S2',AND 'S3' SHALL HAVE EMBEDDED nLIGHT AIR OPTION 'NLTAIR2' AND OPTION 'PIRHN' FOR INTEGRAL OCCUPANCY AND DAYLIGHT SENSORS WITH WIRELESS COMMUNICATION TO ALLOW GROUP CONTROL. LIGHTS TO BE CONFIGURED VIA AN APP AND SHALL DIM BY AT LEAST 30% WHEN NO ACTIVITY HAS BEEN DETECTED FOR NO MORE THAN 15 MINUTES. VERIFY EXACT LOCATIONS AND QUANTITY OF FIXTURES WITH ELECTRICAL SITE PLAN.

01 LIGHTING CONTROLS - SITE LIGHTING
SCALE: NONE

Texas Department of Transportation

COPYRIGHT © 2021

DFW Consulting Group, Inc.
1616 Corporate Court, Suite 100
Irving, Tx 75038
(972) 929-1199
www.dfwcgi.com
Project No. .2004
Firm Registration No. :720

STATE OF TEXAS
JOHN HALEY
112905
LICENSED
PROFESSIONAL ENGINEER
04/21/2021

DALLAS DISTRICT (18)
COLLIN COUNTY
McKinney Area Engineering and Maintenance Facility
2205 TX-5, McKinney, TX 75069
PROJECT NO. 18-470420012

ISSUED: 2021.04.21
DRAWN BY: DFWCGI
REVISIONS:

LIGHTING CONTROLS - EXTERIOR

E5.3

THIS DRAWING CREATED FOR PRODUCTION ON 22"x34" SHEET SIZE. DO NOT SCALE PRINTS.

GENERAL NOTES

1	FOR REFERENCE ONLY. LIGHTING CONTROLS PROVIDED BY HORTON CONTROLS GROUP. CONTACT JAMES ADAMS, JADAMS@HORTONCONTROLSGROUP.COM FOR ADDITIONAL INFORMATION.
2	DESIGN BASED AROUND NLIGHT LIGHTING CONTROLS. EQUIVALENT MANUFACTURERS ARE ACCEPTABLE, BUT SHALL BE REVIEWED AND APPROVED BY EOR.

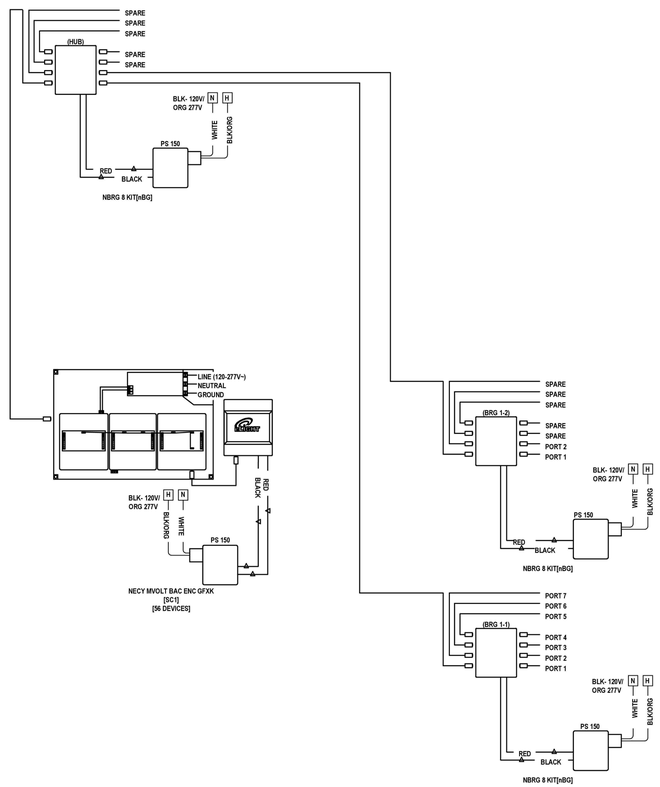

Panel Schedule

Location:	ELEC. 117		Supply Circuit:	T.B.D.	
Catalog:	ARP INTENC16 NLT 16FCR MVOLT SC SM		Voltage:	120/277V NORMAL	
Name:	PL1		Enclosure Dims:	22.45"H x 14.45"W x 4.06"D	
			Mounting:	SURFACE	

Row	Line	Feed	Pole	Part	Volt	EM	Load	Zone
1	P1	61	2		208	No	EXTERIOR LED WALL PACKS	WLPK-1,2
2	P1	63						
3	P1	61	2		208	No	EXTERIOR LED WALL PACKS	WLPK-3,4
4	P1	63						
5	P1	69	2		208	No	EXTERIOR LED WALL PACKS	WLPK-5,6
6	P1	71						
7	P1	69	2		208	No	SPARE	
8	P1	71						
9	P1	61	2		208	No	36" LED BOLLARD LIGHTS	BLRD-1,2
10	P1	63						
11	P1	72	1		120	No	EXISTING LOAD (FLOOD LIGHT)	TRKTR-1
12	P1	72	1		120	No	FLAG POLE / SIGNAGE	FGPMS-1
13	T.B.D.	T.B.D.	1		120	No	EXTERIOR WALL PACKS (WASHBAY DOORS)	WSHBY-1
14			1	SPARE		No	SPARE	
15			1	SPARE		No	SPARE	
16			1	SPARE		No	SPARE	

Relay Summary

Active:	8
Spare:	3
Spaces:	0

	OCCUPANCY SENSOR				TIME CLOCK			WALL SWITCH					DAYLIGHT SENSOR			OTHER			
SOO	VACANCY MODE (MANUAL ON)	OCCUPANCY MODE (AUTO ON)	SENSOR TIME OUT PERIOD (MINS)	DUAL TECHNOLOGY	SCHEDULE ON TIME	SCHEDULE OFF TIME	SCHEDULE OVERRIDE SWITCH	MANUAL (ON/OFF)	MANUAL DIMMING	KEY SWITCH	SCENE CONTROL	GRAPHIC TOUCHSCREEN	SWITCHING (ON/OFF)	DIMMING	TARGET LIGHTING LEVELS (FC)	EXTERIOR LOCATION	PLUG LOAD CONTROL	NETWORKED	NOTES
CONFERENCE	X		10	X							X								
CORRIDOR		X	10	X				X										X	1
ENGINEERING & MAINTENANCE OFFICE	X		10	X				X						X	50				
EXTERIOR LIGHTING (BUILDING & FACADE)																		X	2
EXTERIOR PARKING LOT LIGHTING																		X	3
HERBACIDE STORAGE	X		10					X											
HUDDLE / WELLNESS	X		10	X					X										
LAB OFFICE	X		10					X						X	50				
LAB STORAGE / TOOLS, STOCK ROOM & INVENTORY	X		10					X											
LUNCH / BREAK		X	10	X															4
MEETING / TRAINING	X		10	X							X			X	50				
MEN'S LOCKER ROOM	X		10	X				X											
OVEN ROOM		X	10					X											4
PRIV.OFFICE / COPY & PLOT / STORAGE / JAN.	X		10	X				X											
SOILS / SHAKER BREAKER	X		10	X				X											
VEHICLE SHOP		X	10					X											
VESTIBULE		X	10	X				X										X	1
WOMEN & MEN (RESTROOMS)		X	10	X				X											

NOTES:

1. LIGHTING SHALL BE CONTROLLED WITH TIME-CLOCK DURING NORMAL OFFICE HOURS AND OCCUPANCY SENSOR FOR AFTER HOURS. COORDINATE TIME-CLOCK SCHEDULING WITH OWNER DURING START-UP.
2. LIGHTS SHALL TURN 'ON' AT DUSK VIA PHOTOCELL AND TURN 'OFF' 1 HOUR AFTER BUSINESS CLOSING TO NOT EARLIER THAN 1 HOUR BEFORE BUSINESS OPENING.
3. LIGHTS SHALL BE CONTROLLED WITH TIME-CLOCK AND INTERNAL AMBIENT AND OCCUPANCY SENSORS IN THE FIXTURE. FIXTURES SHALL DIM BY 30% WHEN NO OCCUPANCY IS DETECTED AFTER 15 MINUTES.
4. PARTIAL 'ON' TO 50%, MANUAL 'ON' TO 100%.

01 LIGHTING CONTROLS - NECY (SC1) RISER DIAGRAM

SCALE: NONE

Texas Department of Transportation

COPYRIGHT © 2021

DFW Consulting Group, Inc.
1616 Corporate Court, Suite 100
Irving, Tx 75038
(972) 929-1199
www.dfwcgi.com
Project No. .2004
Firm Registration No. :720

STATE OF TEXAS
JOHN HALEY
112905
LICENSED
PROFESSIONAL ENGINEER
04/21/2021

DALLAS DISTRICT (18)
COLLIN COUNTY
McKinney Area Engineering and Maintenance Facility
2205 TX-5, McKinney, TX 75069
PROJECT NO. 18-470420012

ISSUED: 2021.04.21
DRAWN BY: DFWCGI
REVISIONS:

LIGHTING CONTROLS - RISER DIAGRAM

E5.4

THIS DRAWING CREATED FOR PRODUCTION ON 22"x34" SHEET SIZE. DO NOT SCALE PRINTS.

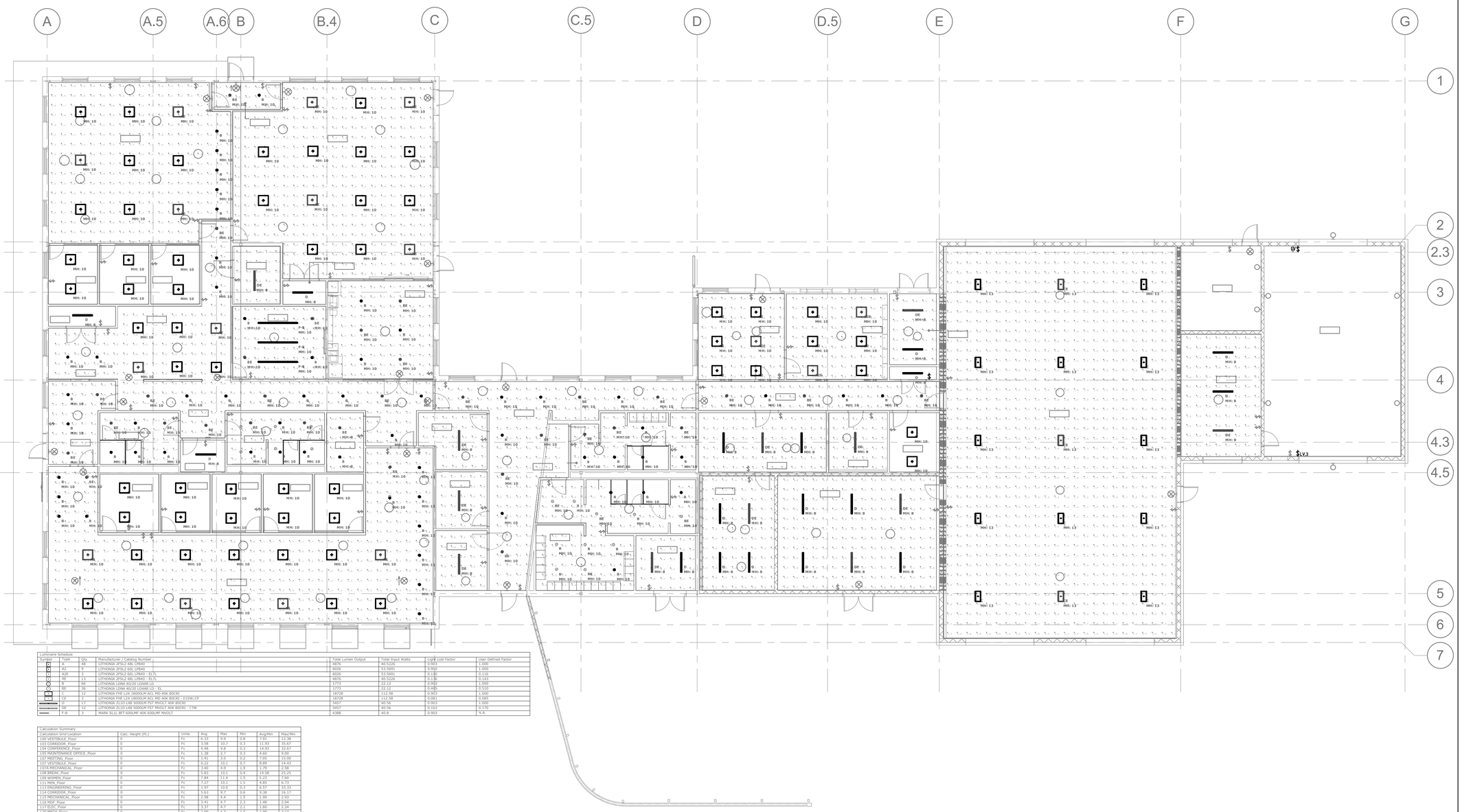

Luminaire Schedule							
Symbol	Type	Qty	Manufacturer / Catalog Number	Total Lumen Output	Total Input Watts	Light Loss Factor	User Defined Factor
	A	48	LITHONIA 2FSL2 48L LP840	4876	40.5226	0.903	1.000
	A2	9	LITHONIA 2FSL2 60L LP840	6026	53.5691	0.903	1.000
	A2E	3	LITHONIA 2FSL2 60L LP840 - EL7L	6026	53.5691	0.180	0.116
	AE	13	LITHONIA 2FSL2 48L LP840 - EL7L	4876	40.5226	0.180	0.143
	B	66	LITHONIA LDN4 40/20 L04AR LD	1773	22.12	0.903	1.000
	BE	36	LITHONIA LDN4 40/20 L04AR LD - EL	1773	22.12	0.480	0.510
	C	12	LITHONIA FHI 12A 18000LM ACL MD 40K 80CRI	18728	112.58	0.903	1.000
	CE	3	LITHONIA FHI 12A 18000LM ACL MD 40K 80CRI - E10W,CP	18728	112.58	0.081	0.085
	D	17	LITHONIA 2LLD L48 5000LM FST MVOLT 40K 80CRI	5457	40.56	0.903	1.000
	DE	12	LITHONIA 2LLD L48 5000LM FST MVOLT 40K 80CRI - 17W	5457	40.56	0.162	0.170
	F-8	3	MARK SLIL 8FT 600LMF 40K 60SLMF MVOLT	4388	40.8	0.903	N.A.

Calculation Summary								
Calculation Grid Location	Calc. Height (Ft.)	Units	Avg	Max	Min	Avg/Min	Max/Min
100 VESTIBULE_Floor	0	Fc	6.33	9.9	0.8	7.91	12.38
103 CORRIDOR_Floor	0	Fc	3.58	10.7	0.3	11.93	35.67
104 CONFERENCE_Floor	0	Fc	4.48	9.8	0.3	14.93	32.67
105 MAINTENANCE OFFICE_Floor	0	Fc	1.38	2.7	0.3	4.60	9.00
107 MEETING_Floor	0	Fc	1.41	3.0	0.2	7.05	15.00
107 VESTIBULE_Floor	0	Fc	6.22	10.1	0.7	8.89	14.43
107A MECHANICAL_Floor	0	Fc	3.40	4.9	1.9	1.79	2.58
108 BREAK_Floor	0	Fc	5.83	10.1	0.4	14.58	25.25
109 WOMEN_Floor	0	Fc	7.84	11.4	1.5	5.23	7.60
111 MEN_Floor	0	Fc	7.27	10.1	1.5	4.85	6.73
113 ENGINEERING_Floor	0	Fc	1.97	10.0	0.3	6.57	33.33
114 CORRIDOR_Floor	0	Fc	5.63	9.7	0.6	9.38	16.17
115 MECHANICAL_Floor	0	Fc	2.98	4.4	1.5	1.99	2.93
116 MOF_Floor	0	Fc	3.41	4.7	2.3	1.48	2.04
117 ELEC_Floor	0	Fc	3.37	4.7	2.1	1.60	2.24
120 MECH_Floor	0	Fc	2.99	4.7	1.5	1.99	3.13
121 CORRIDOR_Floor	0	Fc	1.78	10.0	0.4	14.45	25.00
122 LAB_Floor	0	Fc	1.37	2.6	0.4	3.43	6.50
122A SUILS_Floor	0	Fc	2.16	3.2	0.8	2.70	4.00
123 OVEN_Floor	0	Fc	1.85	4.1	0.7	2.64	5.86
123A SHAKER_Floor	0	Fc	1.58	4.1	0.3	5.27	13.67
124 STORAGE_Floor	0	Fc	2.88	4.9	1.1	2.62	4.45
125 ELEC_Floor	0	Fc	3.12	4.5	1.9	1.64	2.37
126 TOOLS_Floor	0	Fc	1.80	4.2	0.3	6.00	14.00
127 WELLNESS_Floor	0	Fc	7.04	14.2	0.5	14.08	28.40
128 VERICAL SHOP_Floor	0	Fc	1.11	3.2	0.3	3.70	10.67
129 EQUIPMENT_Floor	0	Fc	1.46	4.1	0.2	7.30	20.50
134 MEN'S LOCKER_Floor	0	Fc	5.36	11.1	0.3	17.87	37.00
135 WOMEN'S LOCKER_Floor	0	Fc	6.52	10.4	0.3	21.73	34.67

02 LIGHTING EMERGENCY EGRESS PHOTOMETRICS

SCALE: 3/32" = 1'-0"

Texas Department of Transportation

COPYRIGHT © 2021

DFW Consulting Group, Inc.
1616 Corporate Court, Suite 100
Irving, Tx 75038
(972) 929-1199
www.dfwcgi.com
Project No. .2004
Firm Registration No. .720

STATE OF TEXAS
JOHN HALEY
112905
LICENSED
PROFESSIONAL ENGINEER
04/21/2021

DALLAS DISTRICT (18)
COLLIN COUNTY

McKinney Area Engineering and Maintenance Facility

2205 TX-5, McKinney, TX 75069

PROJECT NO. 18-470420012

ISSUED: 2021.04.21

DRAWN BY: DFWCGI

REVISIONS:

LIGHTING - EMERGENCY EGRESS PHOTOMETRICS

E5.5

THIS DRAWING CREATED FOR PRODUCTION ON 22"x34" SHEET SIZE. DO NOT SCALE PRINTS.

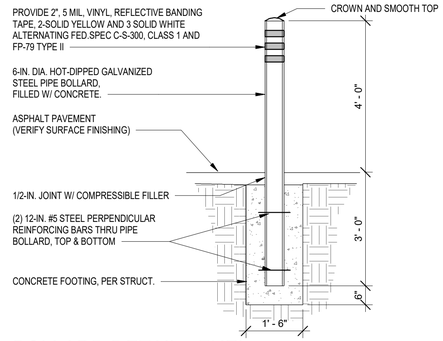

3 BOLLARD DETAIL - FUEL
1/2" = 1'-0"

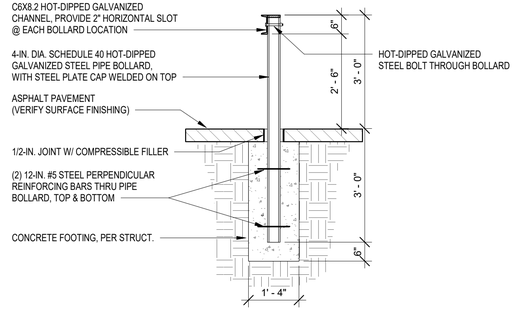

2 BOLLARD DETAIL - PROPANE
1/2" = 1'-0"

Texas Administrative Code

TITLE 16 PART 1 CHAPTER 9
SUBCHAPTER B RULE §9.140
ECONOMIC REGULATION RAILROAD COMMISSION OF TEXAS LP-GAS SAFETY RULES
LP-GAS INSTALLATIONS, CONTAINERS, APPURTENANCES, AND EQUIPMENT REQUIREMENTS
System Protection Requirements

1. Vertical supports for vehicular barrier protection shall be at least three-inch schedule 40 steel pipe or other material with equal or greater strength. The vertical supports shall be capped on the top or otherwise protected to prevent the entrance of water or debris; anchored in concrete at least 18 inches below the ground; and rise at least 30 inches above the ground. Supports shall be spaced four feet apart or less.
2. The horizontal guardrailing for vehicular barrier protection shall be secured to the top of the vertical supports at least 30 inches above the ground. The railing shall be at least three-inch schedule 40 steel pipe or other material with equal or greater strength. The railing shall be capped on the ends or otherwise protected to prevent the entrance of water or debris; and welded or bolted to the vertical supports with bolts of sufficient size and strength to prevent damage to the protected equipment under normal conditions, including the nature of the traffic to which the protected equipment is subjected.
3. Openings in horizontal guardrailing, except the opening that is permitted directly in front of a bulkhead, shall not exceed three feet. Only one opening is allowed on each side of the guardrailing. A means of temporarily removing the horizontal guardrailing and vertical supports to facilitate the handling of heavy equipment may be incorporated into the horizontal guardrailing and vertical supports. In no case shall the protection provided by the horizontal guardrailing and vertical supports be decreased. Transfer hoses from the bulkhead shall be routed only through the 45-degree opening in front of the bulkhead or over the horizontal guardrailing.
4. Clearance of at least three feet shall be maintained between the vehicular barrier protection and any part of an LP-gas transfer system or container or clearance of two feet for retail service station installations. The two vertical supports at the ends of any vehicular barrier protection which protects a bulkhead shall be located a minimum of 24 and a maximum of 36 inches at 45-degree angles to the nearest corner of the bulkhead.
5. Vehicular barrier protection shall extend at least three feet beyond any part of the LP-gas transfer system or container which is exposed to collision damage or vehicular traffic.
6. Installations which have highway barriers located between vehicular traffic and the container and material handling equipment shall not be required to have vehicular barrier protection installed.

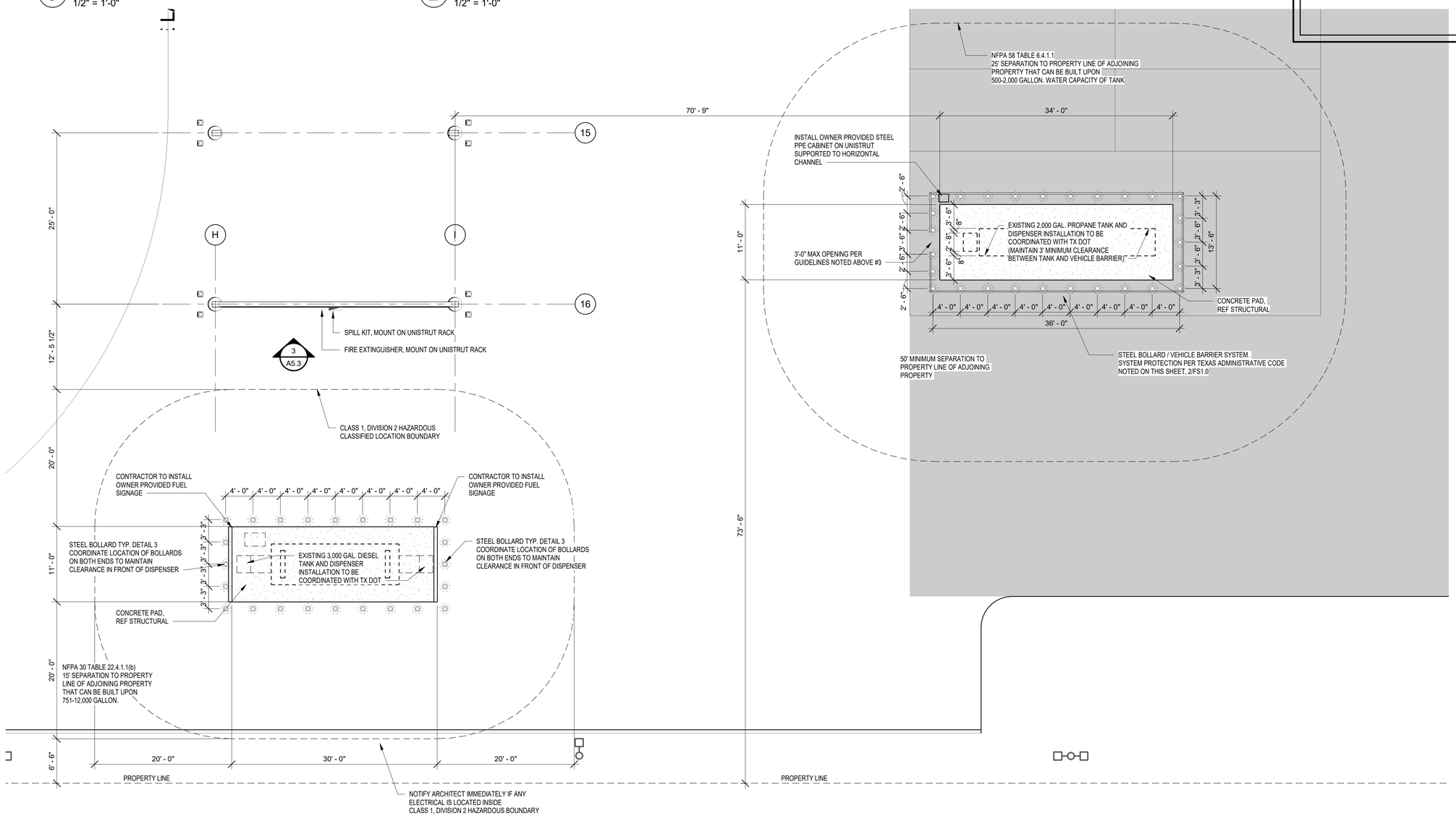

1 FS1.0 ARCHITECTURAL FLOOR PLAN - AREA D
1/8" = 1'-0"

KEYPLAN

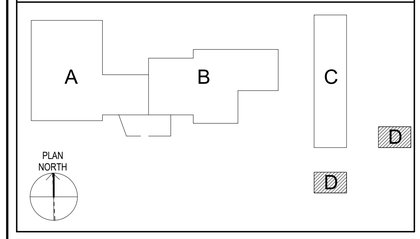

SCALES

Texas Department of Transportation

COPYRIGHT © 2021

Jacobs
1999 Bryan Street, Suite 1200
Dallas, Tx 75201
JACOBS ENGINEERING GROUP, INC
TEXAS REGISTRATION #2966

REGISTERED ARCHITECT JOHN THOMAS MAIN STATE OF TEXAS
04/21/2021

DALLAS DISTRICT (18)
COLLIN COUNTY
McKinney Area Engineering and Maintenance Facility
2205 TX-5, McKinney, TX 75069
PROJECT NO. 18-470420012

ISSUED: 2021.04.21
DRAWN BY: Author
REVISIONS:

FLOOR PLAN
AREA D

FS1.0

THIS DRAWING CREATED FOR PRODUCTION ON 22"x34" SHEET SIZE. DO NOT SCALE PRINTS.

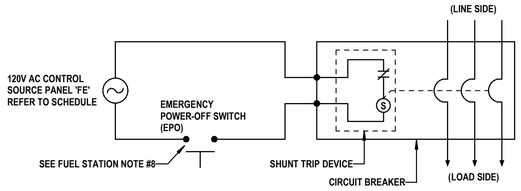

05 SHUNT TRIP WIRING DIAGRAM
SCALE: NONE

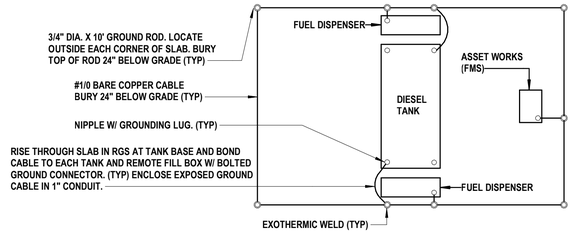

NOTE: PROVIDE A STATIC DISCHARGE CABLE REEL SPRING DRIVEN CABLE REEL WITH HIGH IMPACT HANDLE WITH STAINLESS STEEL CABLE IN ORANGE VINYL CABLE COVER WITH A 50 AMP GROUNDING CLAMP BOND TO TANK GROUNDING SYSTEM.

03 TANK FUEL DISPENSER/GROUNDING SYSTEM
SCALE: NONE

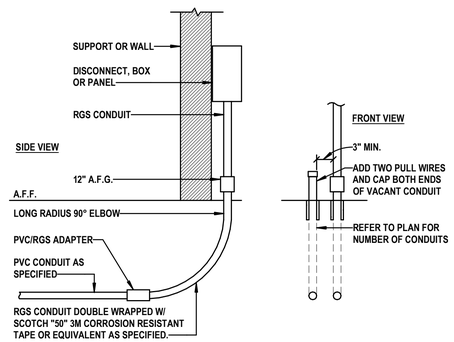

02 STUB UP TO SAFETY SWITCH
SCALE: NONE

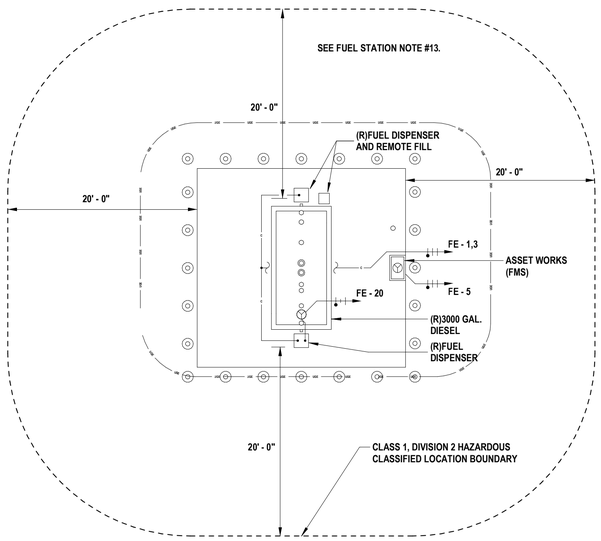

04 FUEL STATION POWER AND SPECIAL SYSTEMS
SCALE: NONE

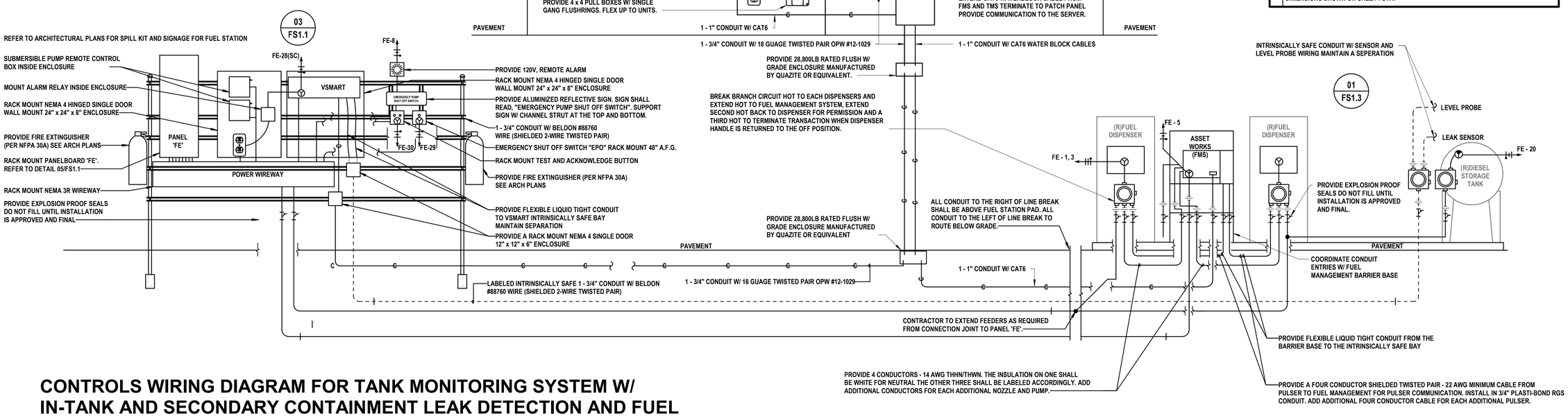

01 CONTROLS WIRING DIAGRAM FOR TANK MONITORING SYSTEM W/ IN-TANK AND SECONDARY CONTAINMENT LEAK DETECTION AND FUEL MANAGEMENT SYSTEM.
SCALE: NONE

GENERAL NOTES

1. CONTRACTOR SHALL BE TCEQ CERTIFIED FOR UNDERGROUND TANK INSTALLATIONS AND REMOVALS, AND CERTIFIED BY THE TANK MANAGEMENT SYSTEM MANUFACTURER. CONTRACTOR SHALL PROVIDE CERTIFICATIONS FOR SUBMITTALS. FUEL SYSTEM PROVIDER SHALL PROVIDE FUEL DISPENSION SYSTEM AS PART OF THE ELECTRICAL CONTRACTORS SCOPE OF WORK. CONTRACTOR SHALL PROVIDE A COMPLETE AND ALL INCLUSIVE SET OF FUEL STATION SHOP DRAWINGS FOR REVIEW PRIOR TO START OF CONSTRUCTION AND INSTALLATION. CONTRACTOR SHALL FOLLOW THE MANUFACTURER'S RECOMMENDATIONS FOR INSTALLATION REQUIREMENTS. IT IS THE CONTRACTORS RESPONSIBILITY TO INSTALL AND PROVIDE A FULLY FUNCTIONAL SYSTEM INCLUDING ALL NECESSARY FITTINGS AND HARDWIRE SENSORS, PROBES, TANK MONITORING AND LEAK SENSING SYSTEM, RISERS, RISER CAPS AND ATTACHMENTS FOR A COMPLETE FUNCTIONING SYSTEM. CONTRACTOR SHALL PROGRAM NEW TANK MANAGEMENT SYSTEM TO COMMUNICATE WITH OWNER PROVIDED FUEL MANAGEMENT SYSTEM TO SPEAK/ COMMUNICATE VEEDER-ROOT. PROVIDE AND SET UP RECONCILIATION WITH THE TMS AND FMS SYSTEM. PROVIDE RACK MOUNT EPO - EMERGENCY POWER OFF SWITCH TO ACTIVATE ALL SHUNT TRIP BREAKERS IN PANEL ON PEDESTAL PER NEC 48" A.F.G. EPO SWITCH SHALL BE LOCATED WITHIN 20 TO 100 FT FROM THE DIESEL DISPENSER. PROVIDE RACK MOUNTED TEST AND ACKNOWLEDGE BUTTON, FIRE EXTINGUISHER, DIESEL PUMP CONTROL BOX, AND ALARM RELAYS. ALL ENCLOSURES ARE TO BE NEMA 4 WITH LIQUID TIGHT CONDUIT.
2. REFER TO ARCHITECTURAL DRAWINGS FOR LOCATION AND ORIENTATION.
3. ALL ADHESIVES, COVERINGS, INSULATION, JACKETS, MASTICS, PIPING, SEALERS, AND WIRING SHALL BE PLENUM RATED, HAVING A FLAME-SPREAD INDEX OF 25 OR LESS, AND SMOKE- DEVELOPED INDEX OF 50 OR LESS, AS REQUIRED BY CODE.

KEYED NOTES BY SYMBOL "⬡"

1. RACK MOUNT EPO - EMERGENCY POWER OFF SWITCH TO ACTIVATE ALL SHUNT TRIP BREAKERS IN PANEL "FE" ON PEDESTAL PER NEC 48" A.F.G. EPO SWITCH SHALL BE LOCATED W/ IN 20 TO 100FT FROM THE DIESEL AND LPG DISPENSORS. COORDINATE LOCATION W/ OTHER DISIPLINES. AND SITE CONDITIONS. REFERENCE ELECTRICAL SITE PLAN FOR ACTUAL LOCATION. REFERENCE DETAIL 03/FS1.1 FOR SHUNT TRIP WIRING DIAGRAM.
2. PROVIDE (1) 3/4" CONDUIT FROM FUEL DISPENSER CONNECTION JOINT TO PANEL 'FE. CONTRACTOR TO FIELD COORDINATE INSTALLATION BASED ON EXISTING INSTALLATION PRIOR TO INSTALLATION OF NEW CONDUITS.
3. ABOVE GROUND 3/4" CONDUITS W/ BELDEN WIRE PER TANK MANAGEMENT SYSTEM MANUFACTURER RECOMMENDATIONS. EXTEND FROM TANK WELLS FOR IN-TANK LEVEL PROBES AND INTERSTITUAL TANK MONITORING SENSERS TO LABELED INTRINSICALLY SAFE EXPLOSION PROOF JUNCTION BOXES. ANCHOR AND SUPPORT CONDUITS AND BOXES W/ CHANNEL STRUT. INTRINSICALLY SAFE CONDUIT SHALL BE LABELED PER NEC 504.80.

GENERAL NOTES - FUEL STATION

1. IT IS THE CONTRACTORS RESPONSIBILITY TO PROVIDE A FULLY FUNCTIONAL SYSTEM, ENSURE A COMPLETE WORKING SYSTEM WHICH SHALL COMPLY W/ MANUFACTURER'S INSTRUCTIONS, NFPA 30, NFPA 30A, NFPA 58, AND NFPA 70, OSHA REQUIREMENTS AND TEXAS COMMISSION ON ENVIRONMENTAL QUALITY, (TCEQ) FOR ABOVE GROUND AND BELOW GROUND STORAGE TANKS.
2. ALL BRANCH CIRCUIT WIRING FROM PANEL 'FE' TO THE FUEL STATION SHALL BE TYPE THHN GASOLINE & OIL RESISTANT SOLID WIRE A MINIMUM OF #12 WIRE IN 3/4"C. ALL ABOVE GROUND CONDUIT SHALL BE RIGID GALVANIZED STEEL (R.G.S.). ALL ABOVE GROUND CONDUIT BODIES AND PULL BOXES SHALL BE EXPLOSION PROOF. ALL BELOW GRADE CONDUIT SHALL BE RIGID NONMETALIC CONDUIT ENCASED IN RED CONCRETE 3" THICK MINIMUM. ALL LONG RADIUS 90° ELBOWS EMERGING FROM THE EARTH OR CONCRETE SHALL BE RIGID GALVANIZED STEEL AND DOUBLE WRAPPED W/ 3M CORROSSION RESISTANT TAPE. CONTRACTOR SHALL INSTALL EXPLOSION-PROOF SEALS IN ALL CONDUITS EMERGING ABOVE GRADE COMMUNICATING W/ THE FUEL ISLAND AT BOTH ENDS UNLESS THE CONDUIT IS EMPTY OR THE CONDUIT IS THE INTRINSICALLY SAFE CONDUIT. THE FIRST FITTING ABOVE GRADE SHALL BE AN N.E.C. APPROVED EXPLOSION-PROOF SEAL.
3. THE ELECTRICAL INSTALLATION FOR THE FUEL ISLAND, INCLUDING POWER AND COMMUNICATIONS, SHALL COMPLY W/ THE NATIONAL ELECTRICAL CODE, ARTICLES 500, 501, 502, 504, 514, AND ALL RELATED ARTICLES THEREOF.
4. PROVIDE AND INSTALL A INTEGRATED TANK MONITORING SYSTEM W/ SMART IN-TANK LEVEL PROBES AND SMART SECONDARY CONTAINMENT LEAK DETECTION PER SCHEDULE W/ AN EXTERNAL ALARM AND TEST / ACKNOWLEDGE BUTTON. IF A DIFFERENT SYSTEM IS PROVIDED, IT SHALL BE THE CONTRACTOR'S RESPONSIBILITY TO PROVIDE THE CORRECT TYPE AND QUANTITY OF COMMUNICATION CABLING AND CONDUITS FOR THAT SYSTEM.
5. CONTRACTOR SHALL FOLLOW THE MANUFACTURER'S RECOMMENDATIONS FOR INSTALLATION REQUIREMENTS. IT IS THE CONTRACTORS RESPONSIBILITY TO INSTALL AND PROVIDE A FULLY FUNCTIONAL SYSTEM INCLUDING ALL THE NECESSARY FITTINGS AND HARDWARE SENSORS, PROBES, RISERS, RISER CAPS AND ATTACHMENTS FOR A COMPLETE FUNCTIONING SYSTEM. ALL CAPS AND RISERS SHALL BE THE QUICK RELEASE TYPE.
6. NO SPLICES SHALL BE MADE IN THE WIRE RUN BETWEEN A SENSOR OR PROBE JUNCTION BOX AND THE VSMART MODULE.
7. ALL ELECTRICAL POWER TO THE FUEL ISLAND W/ IN THE BOUNDS OF THE CLASS 1 DIVISION 1 &2 AREA SHALL BE TIED INTO AN EPO SWITCH. EACH EPO SWITCH SHALL DISCONNECT SIMULTANEOUSLY FROM THE SOURCE OF SUPPLY. ALL CONDUCTORS OF THE CIRCUIT, INCLUDING THE GROUNDED CONDUCTOR PER N.E.C., ARTICLE 514-11(A) "CIRCUIT DISCONNECTS".
8. EACH EMERGENCY POWER-OFF SWITCH (EPO) SHALL BE A MOMENTARY PUSH BUTTON CLEARLY IDENTIFIED AND EASILY ACCESSIBLE AND BE INSTALLED IN A REMOTE LOCATION MORE THAN 20 FEET BUT LESS THAN 100 FEET FROM THE DISPENSER UNITS AND ALSO IN LINE OF SIGHT OF THE DISPENSER UNITS. THE EMERGENCY STOP BUTTON SHALL BE A MANUFACTURED EMERGENCY STOP CONTROL STATION COMPLETE KIT W/ A CLEAR COVER AND EMERGENCY STOP SIGNAGE W/ IN ENCLOSURE BY POWER INTEGRITY #IA-ESOC.
9. PROVIDE TWO HOURS OF TRAINING FOR TXDOT SELECTED PERSONNEL FOR ALL EQUIPMENT.
10. FUEL STATION CONTRACTOR SHALL SUBMIT TO THE OWNER A COPY OF WARRANTY LETTER OR CERTIFICATION LETTER SENT TO THE TANK MONITORING SYSTEM MANUFACTURER STATING THE SYSTEM IS FUNCTIONING AND INSTALLED PROPERLY TO OBTAIN WARRANTY.
11. INTRINSICALLY SAFE INPUT WIRING SHALL BE INSTALLED PER N.E.C. ARTICLE 504. NON-TRINSICALLY SAFE WIRING ON THIS PROJECT SHALL NOT SHARE OTHER WIRES OF ANY TYPE IN RACEWAYS, CONDUIT BODIES, JUNCTION BOXES OR GUTTERS W/ INTRINSICALLY SAFE WIRING. INTRINSICALLY SAFE WIRING SHALL REMAIN SEPARATED IN ALL CASES. INTRINSICALLY SAFE CONDUIT SHALL BE LABELED PER NEC 504.80. CONTRACTOR SHALL WORK W/ EXISTING CONDITIONS.
12. REFER TO STRUCTURAL DRAWINGS FOR FUEL STATION FOUNDATION AND BOLLARD REQUIREMENTS.
13. SIZE OF FUEL TANKS WILL VARY DEPENDING ON TANK PROVIDED. CONTRACTOR SHALL USE DIMENSIONS OF TANK SUPPLIED TO FINALIZE SIZE AND DIMENSIONS OF LAYOUT FUEL STATION BOLLARDS, SLAB TANK, AND EQUIPMENT WITHIN THE RESTRICTIVE DIMENSIONS SHOWN ON SHEET FS1.4.

Texas Department of Transportation

COPYRIGHT © 2021

DFW Consulting Group, Inc.
1616 Corporate Court, Suite 100
Irving, Tx 75038
(972) 929-1199
www.dfwcgi.com
Project No. .20014
Firm Registration No. .720

STATE OF TEXAS
JOHN HALEY
112905
LICENSED
PROFESSIONAL ENGINEER
04/21/2021

DALLAS DISTRICT (18)
COLLIN COUNTY
McKinney Area Engineering and Maintenance Facility
2205 TX-5, McKinney, TX 75069
PROJECT NO. 18-470420012

ISSUED: 2021.04.21
DRAWN BY: DFWCGI
REVISIONS:

FUEL STATION DETAILS

FS1.1

THIS DRAWING CREATED FOR PRODUCTION ON 22"x34" SHEET SIZE. DO NOT SCALE PRINTS.

GENERAL NOTES

1.	NO ELECTRICAL POWER SHALL BE USED FOR CONSTRUCTION OR MAINTENANCE IN HAZARDOUS LOCATIONS AFTER DISPENSERS OR TANK MOUNTED PUMPS BECOME OPERABLE OR DURING ANY TESTING PROCEDURES WHERE AND WHEN FUEL IS PRESENT.
2.	USE ONLY PNEUMATIC POWER TOOLS FOR MAINTENANCE OR DURING CONSTRUCTION AFTER DISPENSOR OR PUMPS BECOME OPERABLE AND FUEL IS PRESENT.
3.	NOT ALL CONDUIT FITTINGS, DEVICES, BOXES, ARE SHOWN ON RISER DRAWINGS. SOME ARE SHOWN ONLY TO ILLUSTRATE METHOD AND INTENT. PROVIDE ALL EXPLOSION PROOF DEVICES WITH ANY REQUIRED SEALING COMPOUNDS IN AREAS NOTED AS HAZARDOUS LOCATIONS.
4.	ALL CONDUITS SHALL HAVE AN EQUIPMENT GROUNDING WIRE BONDED AT BOTH CONDUIT ENDS.
5.	ALL ADHESIVES, COVERINGS, INSULATION, JACKETS, MASTICS, PIPING, SEALERS, AND WIRING SHALL BE PLENUM RATED, HAVING A FLAME-SPREAD INDEX OF 25 OR LESS, AND SMOKE- DEVELOPED INDEX OF 50 OR LESS, AS REQUIRED BY CODE.

KEYED NOTES BY SYMBOL "⬡"

1.	CONTRACTOR SHALL PROVIDE EXPLOSION PROOF FITTINGS RATED FOR CLASS AND DIVISIONS IN THIS AREA. ALSO SEE GENERAL NOTES.

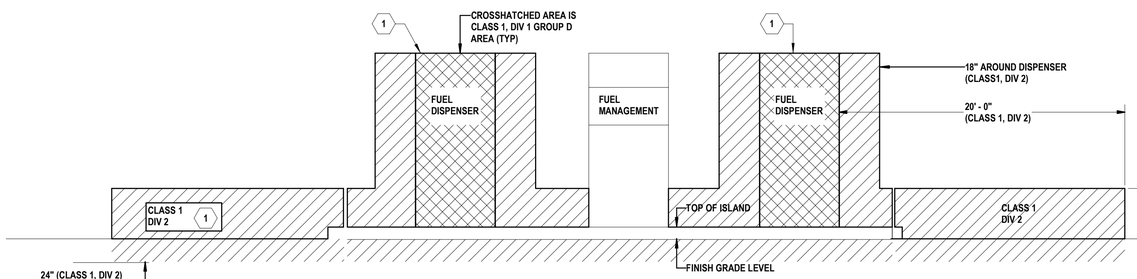

DISPENSER ISLAND ELEVATION

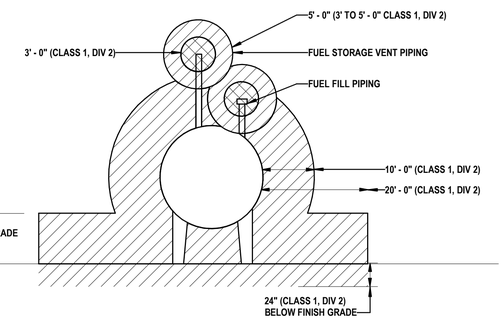

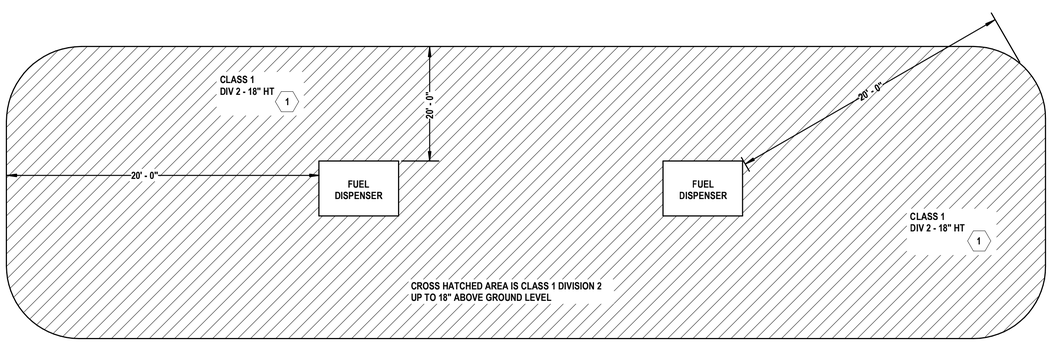

DISPENSER ISLAND PLAN

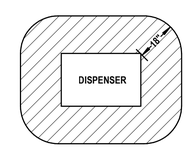

HATCHED AREA IS CLASS 1 DIVISION 2, GROUP D UP TO 4' - 0" OR HIGHEST POINT OF FUEL LINES ABOVE GROUND LEVEL. AREA BELOW GROUND IS CLASS 1 DIVISION 1.

DISPENSER PLAN

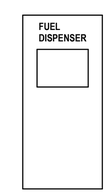

DISPENSER ELEVATION

FS-GASOLINE DISPENSING AND SERVICE AREAS - CLASS 1, DIVISIONS 1 & 2 PLANS AND ELEVATIONS

01 SCALE: NONE

Texas Department of Transportation

COPYRIGHT © 2021

DFW Consulting Group, Inc.
1616 Corporate Court, Suite 100
Irving, Tx 75038
(972) 929-1199
www.dfwcgi.com
Project No. .2004
Firm Registration No. :720

STATE OF TEXAS
JOHN HALEY
112905
LICENSED
PROFESSIONAL ENGINEER
04/21/2021

DALLAS DISTRICT (18)
COLLIN COUNTY
McKinney Area Engineering and Maintenance Facility
2205 TX-5, McKinney, TX 75069
PROJECT NO. 18-470420012

ISSUED: 2021.04.21
DRAWN BY: DFWCGI
REVISIONS:

FUEL STATION DETAILS

FS1.2

THIS DRAWING CREATED FOR PRODUCTION ON 22"x34" SHEET SIZE. DO NOT SCALE PRINTS.

OPW TANK MONITORING SYSTEM SCHEDULE

QTY.	MFG	MODEL	DESCRIPTION
1	SITE SENTINEL	ISITE-INTPRT	ISITE WITH INTERNAL PRINTER.
1	SITE SENTINEL	20-4344	V-SMART 12V DIGITAL IS MODULE (FOR SITESENTINEL MODEL PROBES AND ALL EECO OR PETROVEND SENSORS.
1	SITE SENTINEL	20-8312-ISITE	OUTPUT MODULE - USED WITH SITESENTINEL ISITE TO PROVIDE EXTERNAL CONTROL FUNCTIONS IN RESPONSE TO ALARM CONDITIONS (UP TO 4 MODULES PER CONSULE)
1	SITE SENTINEL	30-2015	EXTERNAL ALARM (LIGHT/BUZZER/SILENCE SWITCH-OUTDOOR RATED) 110V
2	SITE SENTINEL	30-0219	OPW RISER CAP AND COLLAR 100MM (4" NPT THREAD) WITH GROMMET - ALUMINUM WITH SNAP IN LOCKABLE LID.
2	SITE SENTINEL	30-B0XX	MODEL 924 MAGNETOSTRICTIVE PROBE VERIFY DIAMETER/HEIGHT TANK.
2	SITE SENTINEL	30-1514-02	2" STAINLESS STEEL FLOAT KIT (PRODUCT/WATER) SG 0.82 - 0.86
2	SITE SENTINEL	30-0230-S	LIQUID ONLY FLOAT SENSOR FOR CONTAINMENT SUMP/DISPENSER PANS, FOR STEEL TANK INTERSTITAL.

NOTES:

SEE 01/FS1.1 FOR FUEL STATION FOR ADDITIONAL INFORMATION.

GENERAL NOTES

1. CONTRACTOR SHALL BE TCEQ CERTIFIED FOR UNDERGROUND TANK INSTALLATIONS AND REMOVALS, AND CERTIFIED BY THE TANK MANAGEMENT SYSTEM MANUFACTURER. CONTRACTOR SHALL PROVIDE CERTIFICATIONS WITH SUBMITTALS. FUEL SYSTEM PROVIDER SHALL PROVIDE SPECIFICATION SECTION 11140 - FUEL DISPENSING SYSTEM IS PART OF THE ELECTRICAL CONTRACTORS SCOPE OF WORK.
2. NOTE THAT CONSTRUCTION DRAWINGS ARE DIAGRAMMATIC BY THEIR NATURE, AND ARE NOT INTENDED TO SHOW EVERY CONNECTION IN DETAIL OR EVERY VENT PIPE, TANK PENETRATION OR DEVICE IN ITS EXACT LOCATION. FEATURES AND COMPONENTS NOT SHOWN ARE SUBJECT TO THE REQUIREMENTS OF STANDARDS REFERENCED ELSEWHERE IN THE CONSTRUCTION DOCUMENTS. THE CONTRACTOR SHALL COORDINATE THE VARIOUS TRADES IN ORDER TO AVOID INTERFERENCE BETWEEN DEVICES IT IS THE CONTRACTORS RESPONSIBILITY TO ENSURE A COMPLETE WORKING SYSTEM WHICH SHALL COMPLY WITH NFPA 30, NFPA 30A, AND NFPA 70, AND TEXAS COMMISSION ON ENVIRONMENTAL QUALITY, (TCEQ) FOR ABOVEGROUND STORAGE TANKS. IT IS THE CONTRACTORS RESPONSIBILITY TO NOTIFY TCEQ OF INTENT TO CONSTRUCT AND OBTAIN REGISTRATION FROM TCEQ. CONTRACTOR SHALL COMPLY WITH TCEQ, EPA AND NFPA REQUIREMENTS.
3. CONTRACTOR SHALL PROVIDE A COMPLETE AND ALL INCLUSIVE ENGINEERED SEALED SET OF FUEL STATION SHOP DRAWINGS FOR TXDOT REVIEW PRIOR TO START OF CONSTRUCTION AND INSTALLATION.
4. CONTRACTOR SHALL FOLLOW THE MANUFACTURER'S RECOMMENDATIONS FOR INSTALLATION REQUIREMENTS. IT IS THE CONTRACTORS RESPONSIBILITY TO INSTALL AND PROVIDE A FULLY FUNCTIONAL SYSTEM INCLUDING ALL THE NECESSARY FITTINGS AND HARDWARE SENSORS, PROBES, TANK LEVEL MONITORING AND LEAK SENSING SYSTEM, RISERS, RISER CAPS AND ATTACHMENTS FOR A COMPLETE FUNCTIONING SYSTEM.
5. ALL PIPING SHALL BE BLACK PIPE MEETING ASTM A-106 STANDARDS. CONTRACTOR SHALL PAINT ALL PIPING WITH A RUST PROHIBITIVE ENAMEL. THE COLOR SHALL BE FIRE ENGINE RED.
6. CONTRACTOR SHALL REGISTER AND PROVIDE CONSTRUCTION NOTIFICATION TCEQ FOR ABOVEGROUND FUEL STORAGE TANK. PROVIDE A PROOF OF REGISTER AND NOTIFICATION OF CONSTRUCTION TO TXDOT.
7. PROGRAM NEW TANK MANAGEMENT SYSTEM TO COMMUNICATE WITH OWNER PROVIDED FUEL MANAGEMENT SYSTEM TO SPEAK/ COMMUNICATE VEEDER-ROOT PROVIDE AND SET UP RECONCILIATION WITH THE TMS AND FMS SYSTEM.

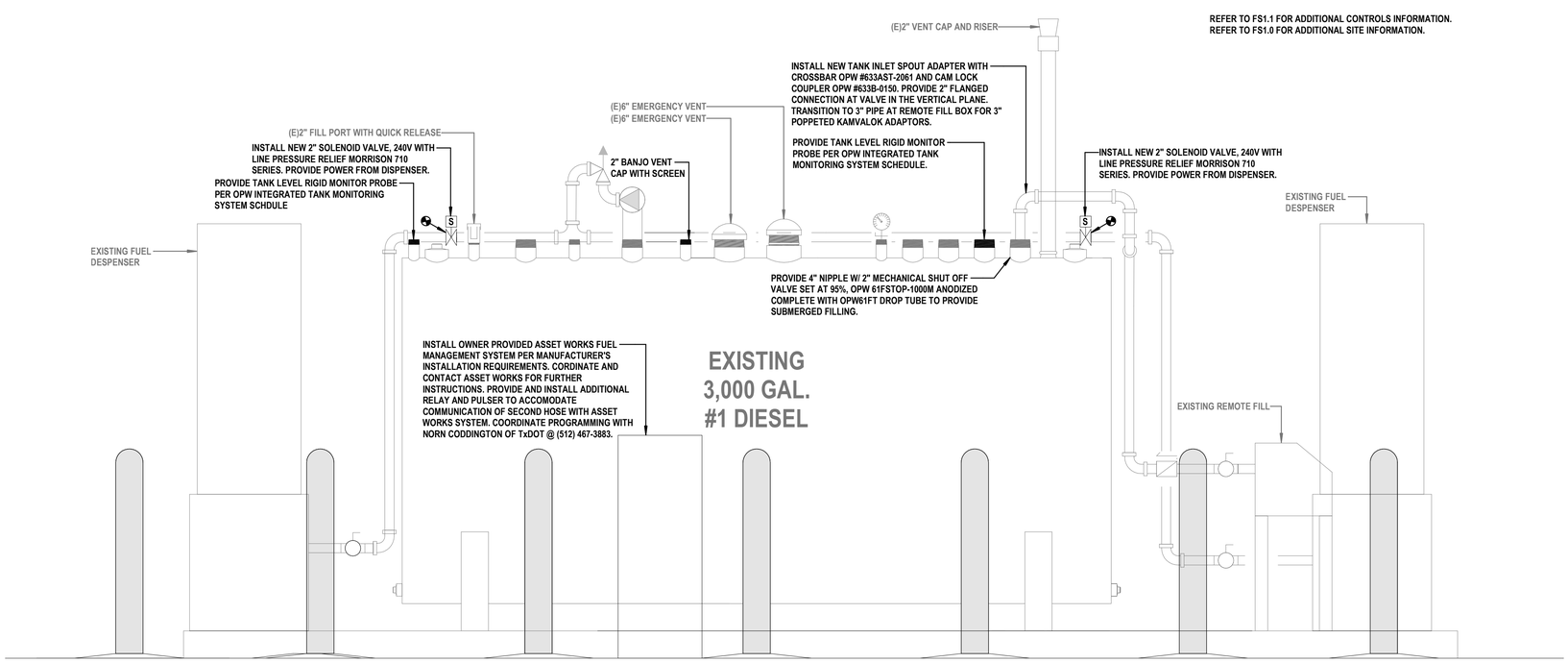

01 FUEL STATION ELEVATION

SCALE: 3/4" = 1'-0"

Texas Department of Transportation

COPYRIGHT © 2021

DFW Consulting Group, Inc.
1616 Corporate Court, Suite 100
Irving, Tx 75038
(972) 929-1199
www.dfwcgi.com
Project No. :2004
Firm Registration No. :720

STATE OF TEXAS
KENNETH DAVID MELINE
61722
REGISTERED
PROFESSIONAL ENGINEER
04/21/2021

DALLAS DISTRICT (18)
COLLIN COUNTY
McKinney Area Engineering and Maintenance Facility
2205 TX-5, McKinney, TX 75069
PROJECT NO. 18-470420012

ISSUED: 2021.04.21
DRAWN BY: DFWCGI
REVISIONS:

FUEL STATION SCHEDULES & ELEVATIONS

FS1.3

THIS DRAWING CREATED FOR PRODUCTION ON 22"x34" SHEET SIZE DO NOT SCALE PRINTS.

ABBREVIATIONS

A.F.F.	ABOVE FINISH FLOOR
AWG	AMERICAN WIRE GAUGE
ARF	ABOVE RAISED FLOOR
CAD	COMPUTER AIDED DESIGN
CAT6	CATEGORY 6
CAT6A	CATEGORY 6A
CB	CABINET
CLK	CAULK
COND.	CONDUIT
CMC	CONSTRUCTION MANAGEMENT COMPANY
CRAC	COMPUTER ROOM AIR CONDITIONER
CSI	CONSTRUCTION SPECIFICATIONS INSTITUTE
CT	COUNT
CTR	CENTER
DET.	DETAIL
DETS.	DETAILS
DIA	DIAGRAM
DIST.	DISTRIBUTION
DN	DOWN
(E)	EXISTING
ELEC	ELECTRICAL
ELEV	ELEVATION
EXT	EXTERNAL
FDP	FIBER DISTRIBUTION PANEL
FGS	FIBER GUIDE SYSTEM
FLUOR	FLUORESCENT
FUT.	FUTURE
FTB	FIBER TERMINATION BLOCK
HDPE	HIGH DENSITY POLYETHYLENE PLASTIC
H.E.	HEAD END
H.R.	HOME RUN
HVAC	HEATING, VENTILATION AND AIR CONDITIONING
IBC	INTERNATIONAL BUILDING CODE
IDF	INTERMEDIATE DISTRIBUTION FRAME
IG	ISOLATED GROUND
ISO.	ISOLATED
ISP	INSIDE PLANT
J.B.	JUNCTION BOX
MAX	MAXIMUM
MB	MACHINE BOLTS
MDF	MAIN DISTRIBUTION FRAME
MGB	MAIN GROUND BAR
MIN	MINIMUM
MMF	MULTIMODE FIBER
MTD	MOUNTED
MUX	MULTIPLEXER
(N)	NEW
NTS	NOT TO SCALE
NEC	NATIONAL ELECTRICAL CODE
NFPA	NATIONAL FIRE PROTECTION AGENCY
O.C.	ON CENTER
OFCI	OWNER FURNISHED, CONTRACTOR INSTALLED
OFOI	OWNER FURNISHED, OWNER INSTALLED
OPS	OPERATIONS
OSP	OUTSIDE PLANT
OTDR	OPTICAL TIME-DOMAIN REFLECTOMETER
OUTL	OUTLET
PB	PULL BOX
PLCS	PLACES
PLYWD.	PLYWOOD
POE	POINT OF ENTRY
POTS	PLAIN OLD TELEPHONE SERVICE
PRI.	PRIMARY
PS	POWER SUPPLY
PVC	POLYVINYL CHLORIDE
QTY.	QUANTITY
RECEPT.	RECEPTACLE (ELECTRICAL)
REQ'D	REQUIRED
RES.	RESOURCE
RF	RACK FRAME
RM	ROOM
RR	RELAY RACK
R.O.	ROUGH OPENING
RU	RACK UNIT
SEC.	SECONDARY
SIM.	SIMILAR
SMF	SINGLE MODE FIBER
STP	SHIELDED TWISTED PAIR
SUSP	SUSPENDED
TBD	TO BE DETERMINED
TELECOM	TELECOMMUNICATIONS
TERM	TERMINATOR
TG	TECHNICAL GROUND
TGB	TELECOMMUNICATIONS GROUND BAR
TMGB	TELECOMMUNICATIONS MAIN GROUND BAR
TIE	TIE CABLE
TMH	TELECOMMUNICATIONS MAN HOLE
TO/FM	TO / FROM
TP	TECHNICAL POWER
TPB	TRANSITION POINT OF ENTRY
TPC	TELECOMMUNICATIONS PULL CAN
TYP.	TYPICAL
U.L.	UNDERWRITERS LABORATORY
U.O.N.	UNLESS OTHERWISE NOTED
UPS	UNINTERRUPTIBLE POWER SYSTEM
UTP	UNSHIELDED TWISTED PAIR CABLE
VAC	VOLTAGE - ALTERNATING CURRENT
VDC	VOLTAGE - DIRECT CURRENT
V.I.F.	VERIFY IN FIELD
W	WATTS
W.J.	WORK START POINT
WKSN	WORKSTATION

ELECTRICAL AND LIGHTING

- REPRESENTS DEMO
- L — LOW VOLTAGE
- CONDUIT
- UNDERGROUND/UNDERFLOOR CONDUIT
- WIRE MOLD
- FLUSH FLOOR COMBINATION DUPLEX/DATA/TELE OUTLET
- FLUSH FLOOR COMBINATION QUAD/DATA/TELE OUTLET
- DATA COMMUNICATIONS OUTLET RUN 3/4" E.C. TO 6" ABV. CLG.
- TELEPHONE OUTLET RUN 3/4" E.C. TO 6"ABV. CLG.
- TELEPHONE / DATA OUTLET RUN 3/4" E.C. TO 6" ABV. CLG.
- F — FIREMAN'S TELEPHONE JACK
- FLUSH FLOOR DATA OUTLET
- FLUSH FLOOR TELEPHONE OUTLET
- FLUSH FLOOR TELE/DATA OUTLET
- CEILING MOUNTED DATA OUTLET
- CEILING MOUNTED TELEPHONE OUTLET
- CEILING MOUNTED TELE/DATA OUTLET
- 2-POST RACK 19" IN + 6" IN VERTICAL CABLE MANAGER ON EACH SIDE. 84 IN (H) x 20.31 IN (W) x 19 IN (D)
- GROUND BAR
- CABLE TRAY- SIZE AND LOCATION AS NOTED ON DRAWINGS
- P — DATA FLOOR BOX / POWER FOR SYSTEMS FURNITURE
- K — SECURITY KEY PAD
- KP — KEY PAD
- CR — CARD READER SECURITY SYSTEM CAM-LOCK DEVICE
- DC — DOOR CONTACT
- ML — MAGNETIC LOCK
- MH — MAGNETIC HOLD-OPEN DEVICE
- J/BOX FOR VOICE/DATA COMMUNICATIONS CABLE FOR MODULAR FURNITURE SYSTEM. RUN 1-1/4" E.C. W/PULL STRING TO 6" ABOVE CEILING
- CCTV CAMERA
- TV — COMBINATION DUPLEX RECEPTACLE/DATA TELEVISION OUTLET MTD 96" A.F.F. WITH 3/4" CONDUIT CONNECTION TO OTHER DEVICES, U.N.O.
- CEILING SPEAKER, NOTE: SUB SCRIPT 'F' DENOTES FIRE ALARM
- WALL HUNG SPEAKER, NOTE: SUB SCRIPT 'F' DENOTES FIRE ALARM
- SMOKE DETECTOR
- POLE LIGHT - REFERENCE LIGHT FIXTURE SCHEDULE. NOTE: REFERENCE PLANS FOR NUMBER OF FIXTURE HEADS
- X-XXX — ELEVATION NO. SHEET NO. ELEVATION MARK
- X-XXX — SECTION NO. SHEET NO. SECTION MARK
- ROOM NAME # — ROOM TAG
- X X-XXX — CALLOUT TAG
- XX — COLUMN / GRID SYMBOL
- X — REVISION SYMBOL
- REVISION CLOUD
- 00 00 00 NOTE — SPEC SECTION & KEYNOTES

TELECOM / SECURITY GENERAL NOTES

CODES:

MECHANICAL:	2018 INTERNATIONAL MECHANICAL CODE, WITH AMENDMENTS
ELECTRICAL:	2017 NATIONAL ELECTRICAL CODE, WITH AMENDMENTS
PLUMBING:	2018 INTERNATIONAL PLUMBING CODE, WITH AMENDMENTS
ENERGY:	2018 INTERNATIONAL ENERGY CODE, WITH AMENDMENTS

THE ENTIRE SCOPE OF THE CONTRACTORS TELECOMMUNICATIONS AND SECURITY SCOPE IS SHOWN THROUGHOUT THE ENTIRE (T-SERIES) DRAWINGS.
IT SHALL BE EACH CONTRACTOR'S RESPONSIBILITY TO THOROUGHLY REVIEW THE ENTIRE SET OF DOCUMENTS INCLUDING, BUT NOT LIMITED TO, THE ENTIRE MECHANICAL, ELECTRICAL, PLUMBING, ARCHITECTURAL, STRUCTURAL, CIVIL, AND DOCUMENTS AND INCLUDE ALL SCOPE IN THE CONTRACTORS RESPONSIBILITY EVEN IF IT IS NOT SHOWN DIRECTLY ON THEIR RESPECTIVE TRADES' DOCUMENTS.

THE CONTRACTOR'S BID PRICE SHALL INCLUDE ALL PARTS AND ITEMS NECESSARY FOR A COMPLETE TELECOMMUNICATIONS WORKING SYSTEM, EVEN IF EVERY PART IS NOT DOCUMENTED IN THE DRAWINGS. REFER TO SPECIFICATION 271343.

THE CONTRACTOR'S BID PRICE SHALL INCLUDE ALL PARTS AND ITEMS NECESSARY FOR A COMPLETE SECURITY WORKING SYSTEM, EVEN IF EVERY PART IS NOT DOCUMENTED IN THE DRAWINGS. REFER TO SPECIFICATION 281300.

IF NOT INDICATED AUDIO/VISUAL WILL BE COMPLETED BY OWNER

Texas Department of Transportation

COPYRIGHT © 2021

Jacobs
1999 Bryan Street, Suite 1200
Dallas, Tx 75201

JACOBS ENGINEERING GROUP, INC
TEXAS REGISTRATION #2966

REGISTERED COMMUNICATIONS DISTRIBUTION DESIGNER
BICSI
Brandon A. Houk
Reg. No. 19[illegible]
Expiration Date
09-21-2021
RCDD

DALLAS DISTRICT (18)
COLLIN COUNTY
McKinney Area Engineering and Maintenance Facility
2205 TX-5, McKinney, TX 75069
PROJECT NO. 18-470420001 2

ISSUED: 2021.04.21
DRAWN BY: JACOBS
REVISIONS:

TELECOM / SECURITY LEGENDS & ABBREVIATION

T0.1

THIS DRAWING CREATED FOR PRODUCTION ON 22"x34" SHEET SIZE. DO NOT SCALE PRINTS.

KEYED NOTES BY SYMBOL...	
1.	JUNCTION BOX FOR SECURITY GATE CONTROLLER. ROUTE 1" CONDUIT WITH PULL STRING UNDERGROUND FROM JUNCTION BOX AND STUB UP IN THE MDF ROOM 116. CABLING WILL EXTEND TO CONTROLLER AT THE RECEPTION AREA 101.
2	JUNCTION BOX FOR DIESEL FUEL STATION COMMUNICATION. ROUTE (1) 2' CONDUIT WITH PULL STRING UNDERGROUND FROM MDF ROOM 116 IN SAME TRENCH WITH ELECTRICAL TO UNISTRUT RACK FOR FUEL STATION PANEL THEN TO JUNCTION BOX AT TANK PAD LOCATION
3	JUNCTION BOX FOR DIESEL FUEL STATION COMMUNICATION. ROUTE (1) 2' CONDUIT WITH PULL STRING UNDERGROUND FROM MDF ROOM 116 IN SAME TRENCH WITH ELECTRICAL TO UNISTRUT RACK FOR FUEL STATION PANEL THEN TO JUNCTION BOX AT TANK PAD LOCATION
4	JUNCTION BOX FOR PROPANE FUEL STATION COMMUNICATIONS. ROUTE (1) 2" CONDUIT WITH PULL STRING UNDERGROUND FROM MDF ROOM 116 IN SAME TRENCH WITH ELECTRICAL TO UNISTRUT RACK FOR FUEL STATION PANEL THEN TO JUNCTION BOX AT TANK PAD LOCATION

KEYPLAN

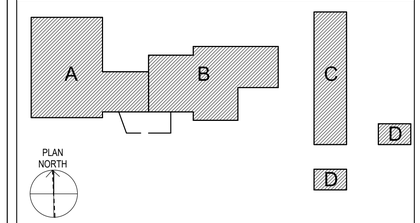

SCALES

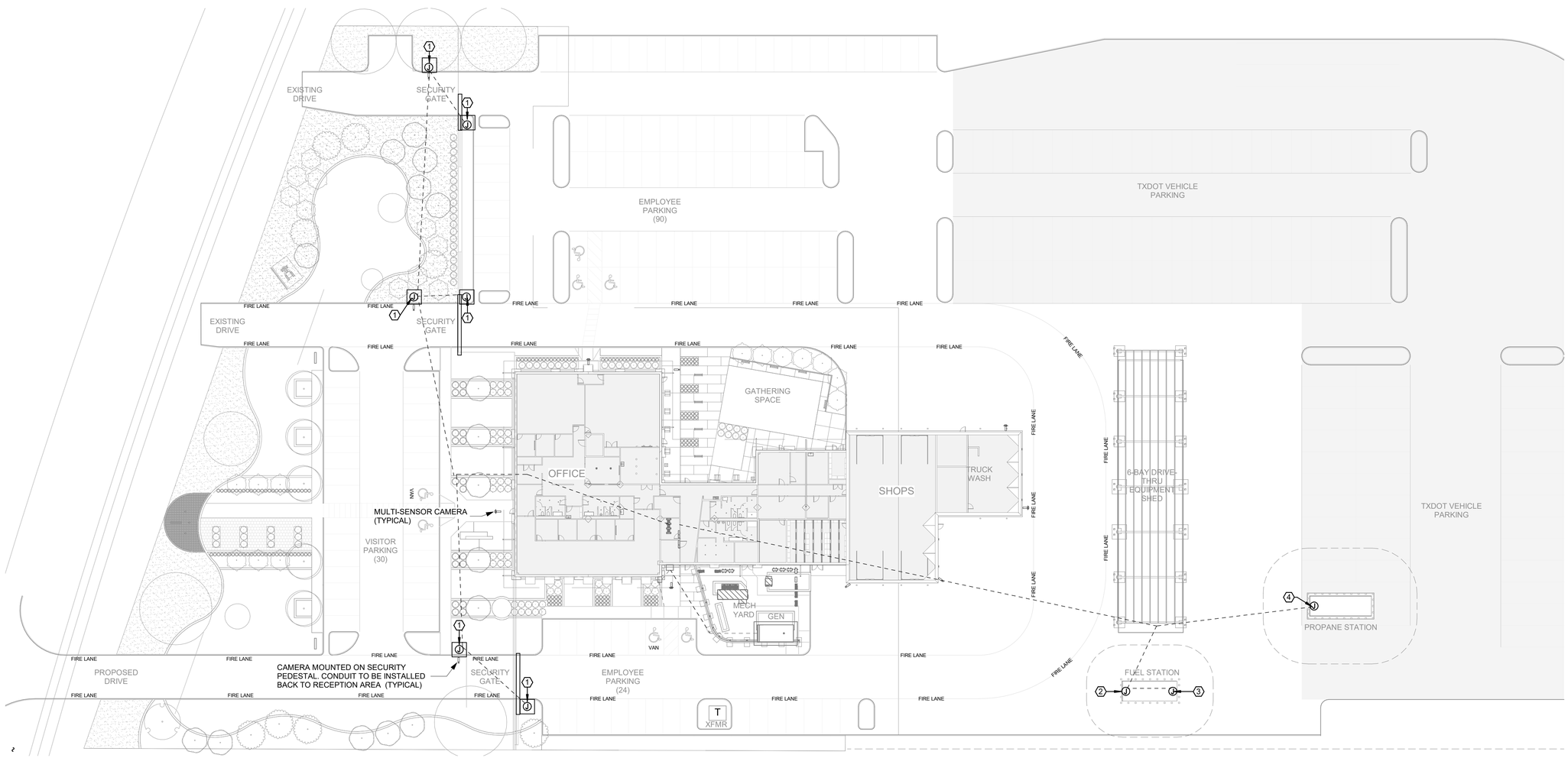

01 TELECOM / SECURITY SITE PLAN

SCALE: 1/32" = 1'-0"

0 30' 60' 90'

Texas Department of Transportation

COPYRIGHT © 2021

Jacobs
1999 Bryan Street, Suite 1200
Dallas, Tx 75201

JACOBS ENGINEERING GROUP, INC
TEXAS REGISTRATION #2966

REGISTERED COMMUNICATIONS DISTRIBUTION DESIGNER
BICSI
Brandon A. Houk
Reg. No. 1[illegible]
Expires 04-30-2021
04-21-2021
RCDD

DALLAS DISTRICT (18)
COLLIN COUNTY
McKinney Area Engineering and Maintenance Facility
2205 TX-5, McKinney, TX 75069
PROJECT NO. 18-4704200012

ISSUED: 2021.04.21
DRAWN BY: JACOBS
REVISIONS:

TELECOM / SECURITY SITE PLAN

T1.2

THIS DRAWING CREATED FOR PRODUCTION ON 22"x34" SHEET SIZE. DO NOT SCALE PRINTS.

GENERAL NOTES - POWER

1	REFERENCE ARCHITECTURAL DRAWINGS FOR EXACT LOCATIONS & MOUNTING HEIGHTS OF ALL ELECTRICAL DEVICES.

KEYPLAN

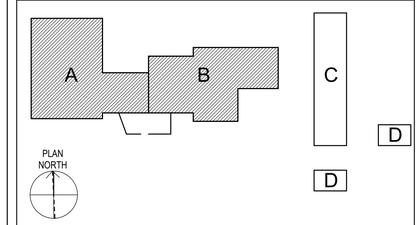

SCALES

Texas Department of Transportation
COPYRIGHT © 2021

Jacobs
1999 Bryan Street, Suite 1200
Dallas, Tx 75201
JACOBS ENGINEERING GROUP, INC
TEXAS REGISTRATION #2966

REGISTERED COMMUNICATIONS DISTRIBUTION DESIGNER
BICSI
Brandon A. Houk
Reg. No. 19080208
Expires 01-31-2021
RCDD

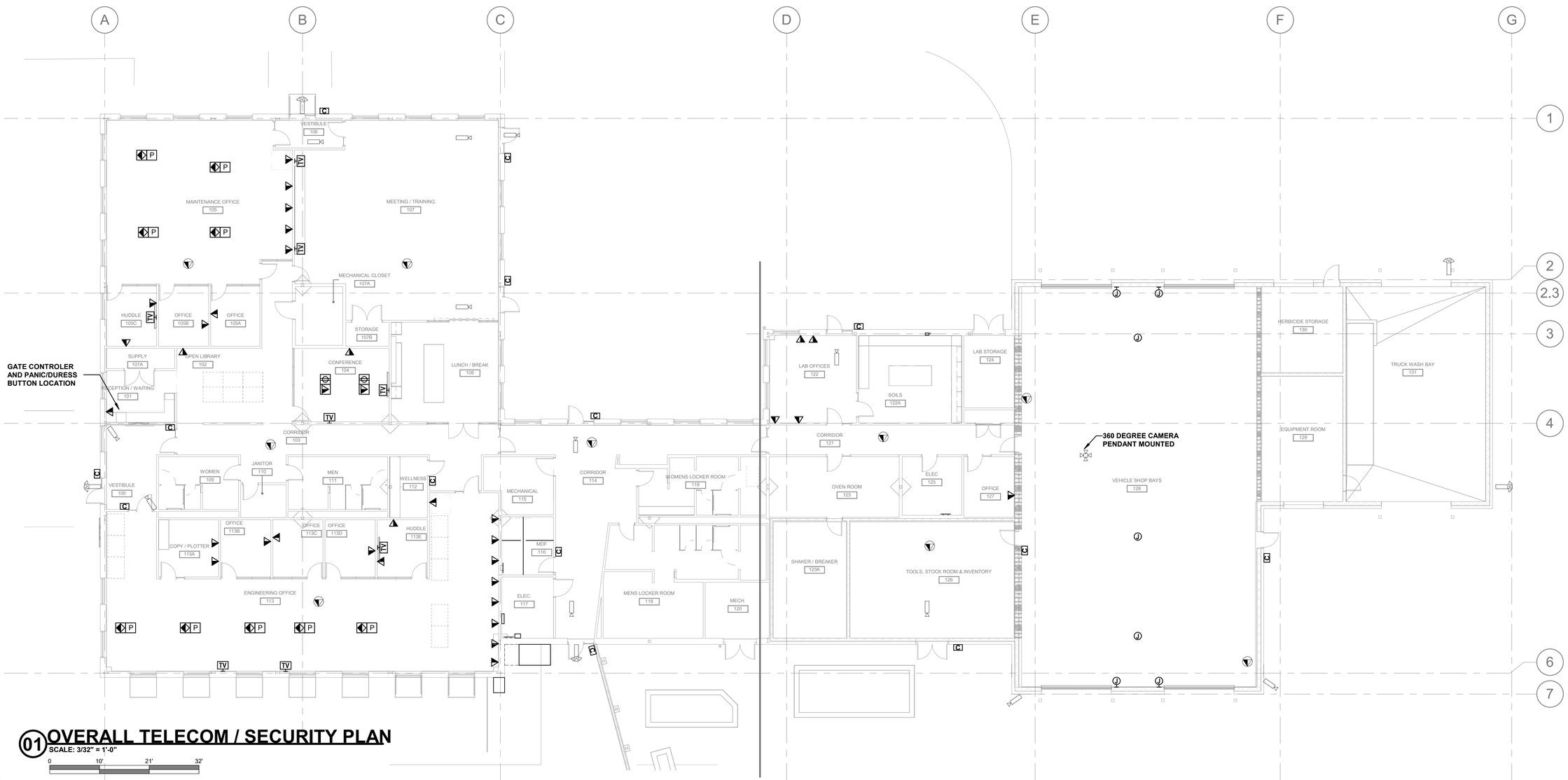

01 OVERALL TELECOM / SECURITY PLAN

SCALE: 3/32" = 1'-0"

0 10' 21' 32'

DALLAS DISTRICT (18)
COLLIN COUNTY
McKinney Area Engineering and Maintenance Facility
2205 TX-5, McKinney, TX 75069
PROJECT NO. 18-4704200012

ISSUED: 2021.04.21
DRAWN BY: JACOBS
REVISIONS:

OVERALL TELECOM / SECURITY PLAN

T2.1

THIS DRAWING CREATED FOR PRODUCTION ON 22"x34" SHEET SIZE. DO NOT SCALE PRINTS.

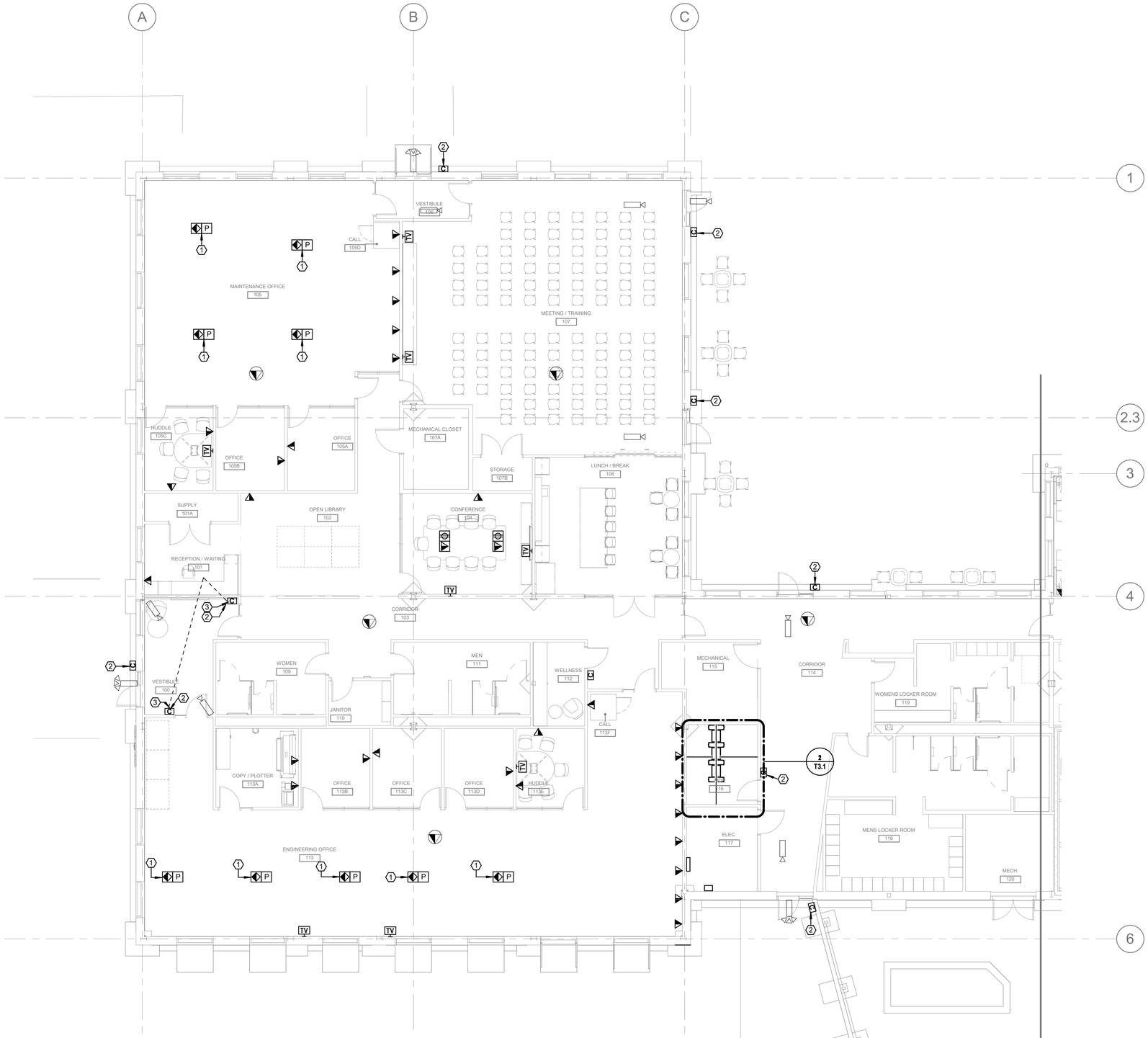

01 TELECOM / SECURITY PLAN AREA A

SCALE: 1/8" = 1'-0"

0 8' 16' 24'

KEYPLAN

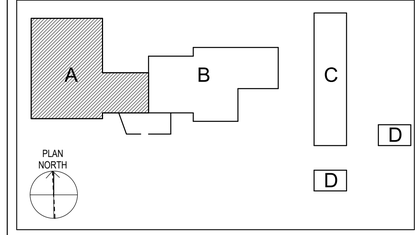

SCALES

GENERAL NOTES - POWER

1	REFERENCE ARCHITECTURAL DRAWINGS FOR EXACT LOCATIONS & MOUNTING HEIGHTS OF ALL ELECTRICAL DEVICES.

KEYED NOTES BY SYMBOL "□"

1	FLOOR BOX FOR FURNITURE SYSTEM. CONFIRM EXACT ELECTRICAL & WIRING REQUIREMENTS OF FURNITURE WITH EQUIPMENT FURNISHED. PROVIDE SHOP DRAWING WITH FLOOR BOX LOCATIONS WITH FURNITURE SUBMITTAL FOR APPROVAL.
2	INDICATED CARD READER. ELECTRICAL CONTRACTOR TO PULL WIRING BACK TO SECURITY ROOM. COORDINATE EXACT REQUIREMENTS WITH SECURITY CONSULTANT/VENDOR.
3	REQUEST TO EXIT TO BE PLACED IN RECEPTION AREA #101 TO BE ABLE TO OPEN DOOR #100B AND #100C. COORDINATE LOCATION IN RECEPTION AREA W/ GATE OPERATORS AND DURESS BUTTON.

Texas Department of Transportation

COPYRIGHT © 2021

Jacobs
1999 Bryan Street, Suite 1200
Dallas, Tx 75201

JACOBS ENGINEERING GROUP, INC
TEXAS REGISTRATION #2966

REGISTERED COMMUNICATIONS DISTRIBUTION DESIGNER
BICSI
Brandon A. Houk
Reg. No. 19-18-0528
Expiration Date
09-21-2021
RCDD

DALLAS DISTRICT (18)
COLLIN COUNTY
McKinney Area Engineering and Maintenance Facility
2205 TX-5, McKinney, TX 75069
PROJECT NO. 18-4704200012

ISSUED: 2021.04.21
DRAWN BY: JACOBS
REVISIONS:

TELECOM / SECURITY PLAN AREA A

T2.2

THIS DRAWING CREATED FOR PRODUCTION ON 22"x34" SHEET SIZE. DO NOT SCALE PRINTS.

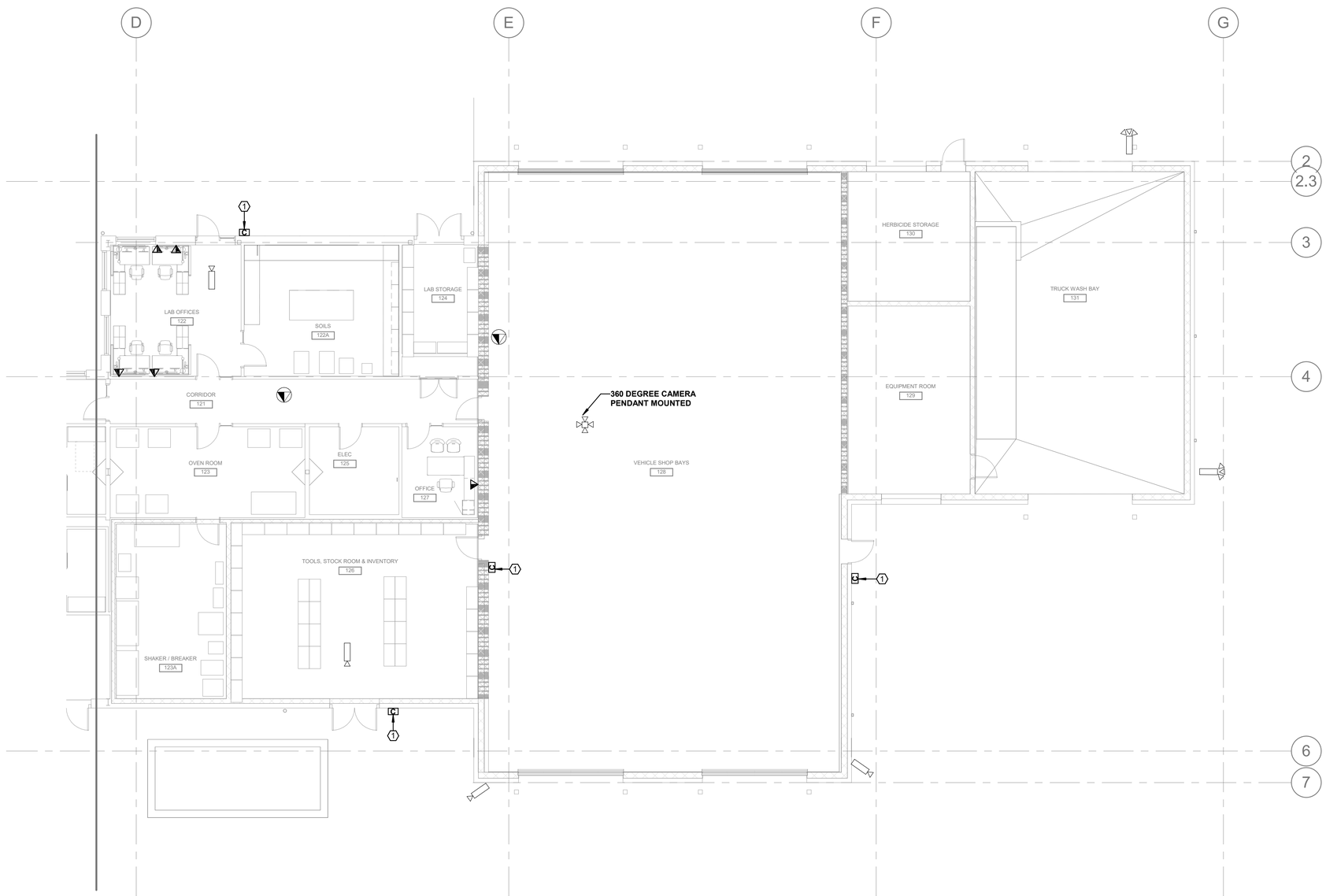

01 TELECOM / SECURITY PLAN AREA B

SCALE: 1/8" = 1'-0"

0 8' 16' 24'

KEYPLAN

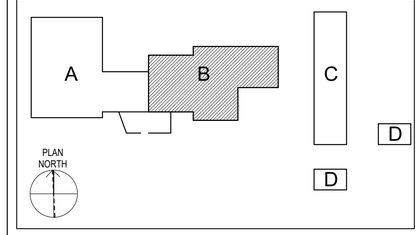

SCALES

GENERAL NOTES - POWER

1 REFERENCE ARCHITECTURAL DRAWINGS FOR EXACT LOCATIONS & MOUNTING HEIGHTS OF ALL ELECTRICAL DEVICES.

KEYED NOTES BY SYMBOL "□"

1 INDICATED CARD READER. ELECTRICAL CONTRACTOR TO PULL WIRING BACK TO SECURITY ROOM. COORDINATE EXACT REQUIREMENTS WITH SECURITY CONSULTANT/VENDOR.

Texas Department of Transportation

COPYRIGHT © 2021

Jacobs
1999 Bryan Street, Suite 1200
Dallas, Tx 75201

JACOBS ENGINEERING GROUP, INC
TEXAS REGISTRATION #2966

REGISTERED COMMUNICATIONS DISTRIBUTION DESIGNER
BICSI
Brandon A. Houk
Reg. No. 1808208
Expiration Date
04-21-2021
RCDD

DALLAS DISTRICT (18)
COLLIN COUNTY
McKinney Area Engineering and Maintenance Facility
2205 TX-5, McKinney, TX 75069
PROJECT NO. 18-4704200012

ISSUED: 2021.04.21
DRAWN BY: JACOBS
REVISIONS:

TELECOM / SECURITY PLAN AREA B

T2.3

THIS DRAWING CREATED FOR PRODUCTION ON 22"x34" SHEET SIZE. DO NOT SCALE PRINTS.

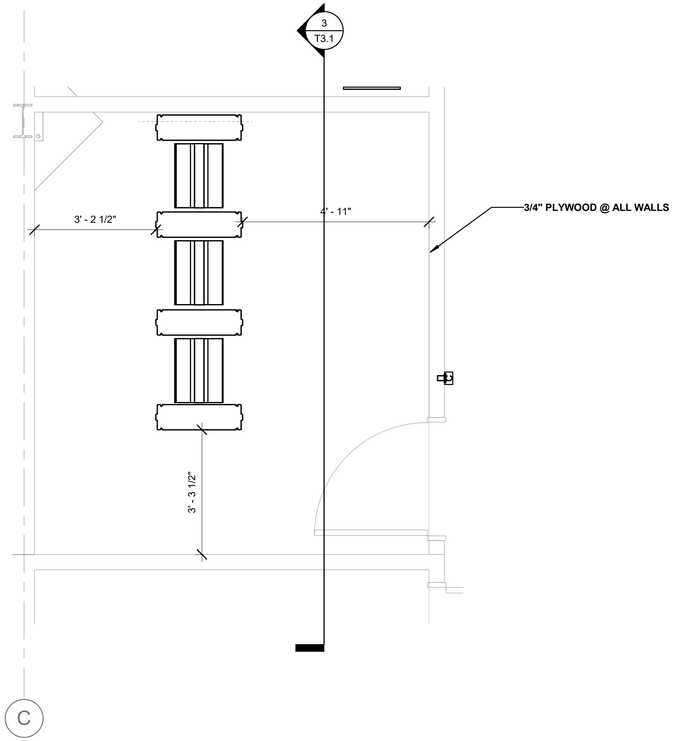

01 MDF ROOM - ENLARGED

SCALE: 1/2" = 1'-0"

0 2' 4' 6'

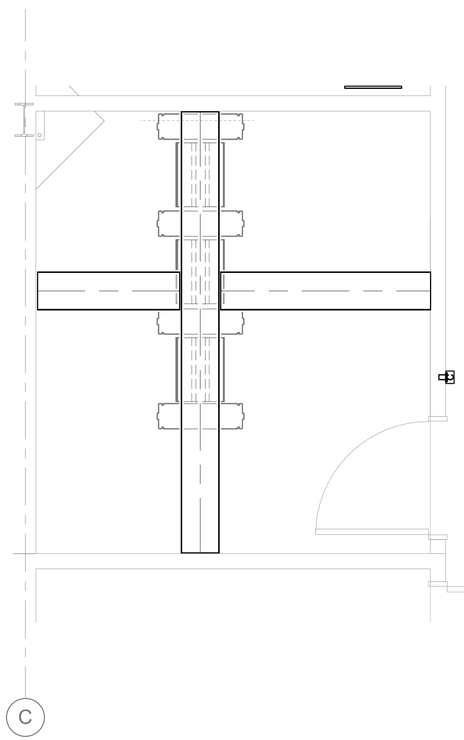

02 MDF ROOM - LADDER RACK

SCALE: 1/2" = 1'-0"

0 2' 4' 6'

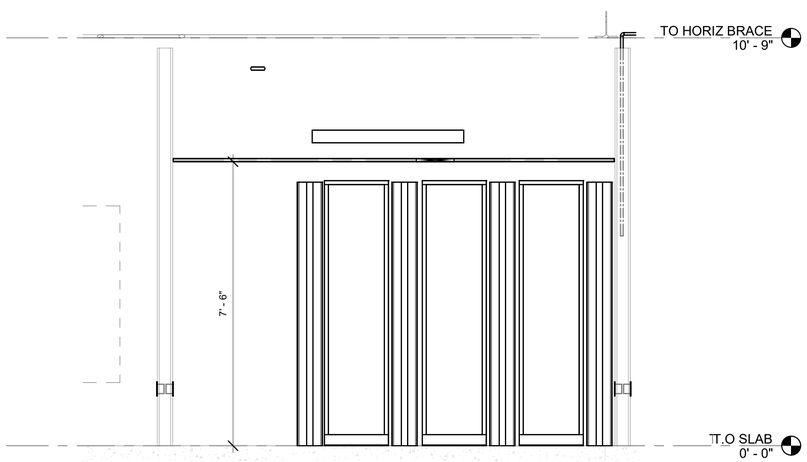

03 MDF ELEVATION

SCALE: 1/2" = 1'-0"

0 2' 4' 6'

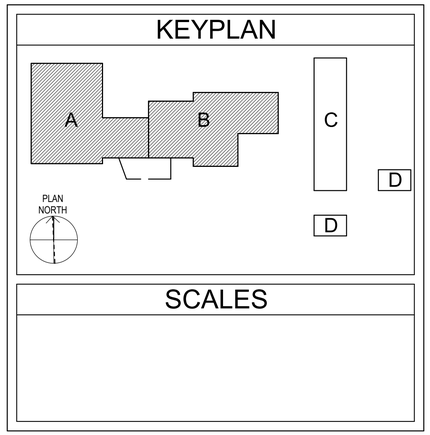

Texas Department of Transportation

COPYRIGHT © 2021

Jacobs
1999 Bryan Street, Suite 1200
Dallas, Tx 75201
JACOBS ENGINEERING GROUP, INC
TEXAS REGISTRATION #2966

Bicsi
Brandon A. Houk
Reg. No. 18-4352R
Expires 12-31-21
REGISTERED COMMUNICATIONS DISTRIBUTION DESIGNER
RCDD

DALLAS DISTRICT (18)
COLLIN COUNTY
McKinney Area Engineering and Maintenance Facility
2205 TX-5, McKinney, TX 75069
PROJECT NO. 18-4704200012

ISSUED: 2021.04.21
DRAWN BY: DFWCGI
REVISIONS:

MDF ENLARGED DETAILS

T3.1

THIS DRAWING CREATED FOR PRODUCTION ON 22"x34" SHEET SIZE. DO NOT SCALE PRINTS.

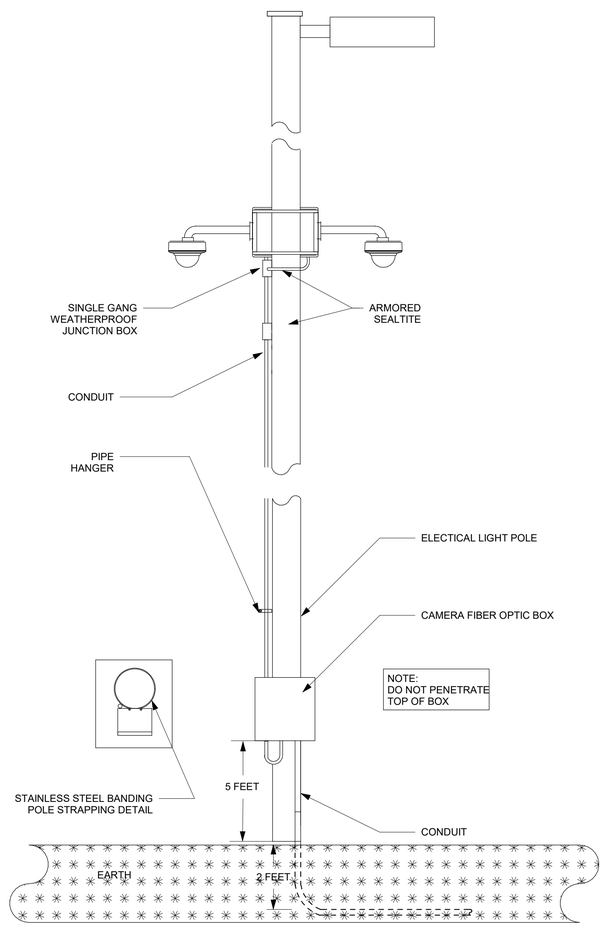

03 SITE CAMERA POLE MOUNT
SCALE:

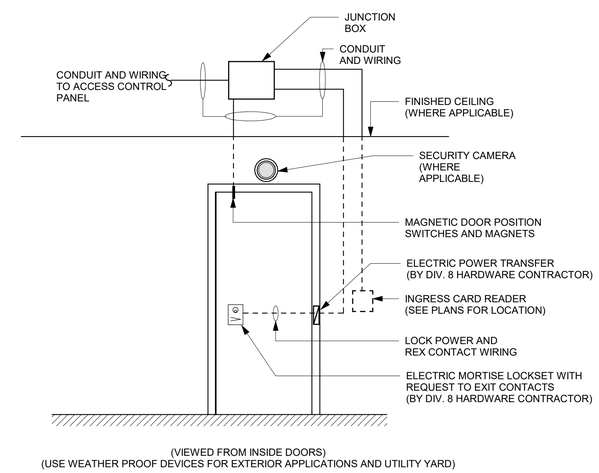

02 CARD READER @ DOOR DETAIL
SCALE:

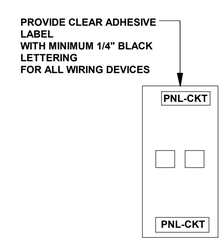

01 TELECOM OUTLET LABEL
SCALE:

Texas Department of Transportation

COPYRIGHT © 2021

Jacobs
1999 Bryan Street, Suite 1200
Dallas, Tx 75201

JACOBS ENGINEERING
GROUP, INC
TEXAS REGISTRATION #2966

REGISTERED COMMUNICATIONS DISTRIBUTION DESIGNER
BICSI
Brandon A. Houk
Reg. No. 1[illegible]
Expires 01-31-2021
RCDD

DALLAS DISTRICT (18)
COLLIN COUNTY
McKinney Area Engineering and Maintenance Facility
2205 TX-5, McKinney, TX 75069
PROJECT NO. 18-4704200012

ISSUED: 2021.04.21
DRAWN BY: JACOBS
REVISIONS:

TELECOM / SECURITY DETAILS

T7.1

THIS DRAWING CREATED
FOR PRODUCTION ON
22"x34" SHEET SIZE:
DO NOT SCALE PRINTS.